TI 809-05
November 1999

US Army Corps
of Engineers

SEISMIC EVALUATION AND REHABILITATION FOR BUILDINGS

Prepared for:
US Army Corps of Engineers

Prepared by:
URS Greiner Woodward Clyde

U.S. Army Corps of Engineers
Washington, D.C. 20314-1000

SEISMIC EVALUATION AND REHABILITATION FOR BUILDINGS

TABLE OF CONTENTS

		Paragraph	Page
CHAPTER 1	**INTRODUCTION**		
	Purpose and Scope	1-1	1-1
	Purpose	1-1a	1-1
	Scope	1-1b	1-1
	Applicability	1-2	1-1
	General	1-2a	1-1
	Exempted buildings	1-2b	1-1
	Nonapplicability	1-2c	1-2
	Design team	1-2d	1-2
	Incremental rehabilitation	1-2e	1-2
	References	1-3	1-2
	Basis for Evaluation and Rehabilitation	1-4	1-2
	Seismic design criteria	1-4a	1-2
	Existing buildings	1-4b	1-3
	Evaluation and rehabilitation	1-4c	1-3
	Background	1-5	1-5
	National Earthquake Hazards Reduction Program (NEHRP)	1-5a	1-5
	The Military Risk Reduction Program	1-5b	1-6
CHAPTER 2	**BUILDING DATA ACQUISITION AND CLASSIFICATION**		
	General	2-1	2-1
	Data Acquisition	2-2	2-1
	Exemptions criteria	2-2a	2-1
	Prior evaluation	2-2b	2-1
	Construction documents	2-2c	2-1
	Seismicity	2-2d	2-1
	Soil data	2-2e	2-1
	Historical significance	2-2f	2-1
	Building description	2-2g	2-1
	Performance Classifications	2-3	2-2
	General	2-3a	2-2
	Seismic Use Groups	2-3b	2-2
	Performance levels	2-3c	2-6
	Design ground motion	2-3d	2-6
	Performance objectives	2-3e	2-9
	Seismic design categories	2-3f	2-9

TABLE OF CONTENTS
(Continued)

		Paragraph	Page
CHAPTER 3	**GEOLOGIC HAZARDS EVALUATION**		
	General	3-1	3-1
	Screening for Geologic Hazards	3-2	3-1
	Evaluation of Geologic Hazards	3-3	3-1
	Mitigation of Geologic Hazards	3-4	3-1
CHAPTER 4	**TIER 1 EVALUATION (SCREENING)**		
	Preliminary Assessment for Structural Evaluations	4-1	4-1
	Definitely requires rehabilitation	4-1a	4-1
	Evaluation is required	4-1b	4-1
	Quality control/quality assurance	4-1c	4-1
	Selection of Structural Evaluation Levels	4-2	4-2
	General	4-2a	4-2
	Tier 1 structural screening	4-2b	4-2
	Tier 2 structural evaluation	4-2c	4-4
	Tier 3 structural evaluation	4-2d	4-4
	Tier 1 Structural Checklists	4-3	4-4
	General	4-3a	4-4
	Tier 1 structural screening results	4-3b	4-4
	Tier 1 Nonstructural Evaluation (Screening)	4-4	4-4
	Scope	4-4a	4-4
	Preliminary assessment	4-4b	4-5
	Nonstructural screening (Tier 1)	4-4c	4-6
	Assessment of Tier 1 Screening Results	4-5	4-7
	Structural	4-5a	4-7
	Nonstructural	4-5b	4-7
CHAPTER 5	**TIER 2 AND TIER 3 EVALUATIONS**		
	General	5-1	5-1
	Ground motion	5-1a	5-1
	Tier 2 evaluation	5-1b	5-1
	Tier 3 structural evaluation	5-1c	5-1
	Directional effects	5-1d	5-1
	P-Δ effects	5-1e	5-1
	Torsion	5-1f	5-1
	Structural System Evaluations	5-2	5-2
	Tier 2 procedures	5-2a	5-2
	Tier 3 procedures	5-2b	5-5

TABLE OF CONTENTS
(Continued)

		Paragraph	Page
	Nonstructural Systems Evaluation	5-3	5-6
	General	5-3a	5-6
	Seismic demands on nonstructural components	5-3b	5-6
	Drift ratios and displacements	5-3c	5-6
	Evaluation results	5-3d	5-6
CHAPTER 6	**FINAL ASSESSMENT AND REPORT**		
	Final Structural Assessment	6-1	6-1
	Structural evaluation assessment	6-1a	6-1
	Structural rehabilitation strategy	6-1b	6-1
	Structural rehabilitation concept	6-1c	6-3
	Final Nonstructural Assessment	6-2	6-3
	Nonstructural evaluation assessment	6-2a	6-3
	Nonstructural rehabilitation strategy	6-2b	6-4
	Nonstructural rehabilitation concept	6-2c	6-4
	Evaluation Report	6-3	6-4
	General	6-3a	6-4
	Executive summary	6-3b	6-4
	Descriptive narrative	6-3c	6-4
	Appendices	6-3d	6-6
CHAPTER 7	**REHABILITATION OF STRUCTURAL SYSTEMS**		
	Introduction	7-1	7-1
	Scope	7-1a	7-1
	The rehabilitation process	7-1b	7-1
	General Rehabilitation Procedures	7-2	7-1
	Review of evaluation data	7-2a	7-1
	Site visit	7-2b	7-1
	Quality assurance/quality control	7-2c	7-1
	Supplementary analysis	7-2d	7-4
	Rehabilitation concept selection	7-2e	7-4
	Rehabilitation design procedures	7-2f	7-4
	Confirming evaluation	7-2g	7-9
	Preparation of Contract Documents	7-3	7-9
CHAPTER 8	**REHABILITATION TECHNIQUES FOR STRUCTURAL SYSTEMS**		
	General	8-1	8-1
	Rehabilitation strategies	8-1a	8-1
	Rehabilitation techniques	8-1b	8-2

TABLE OF CONTENTS
(Continued)

	Paragraph	Page
Rehabilitation Techniques for Structural Components	8-2	8-2
Shear walls	8-2a	8-2
Moment frames	8-2b	8-17
Frames with infills	8-2c	8-32
Braced frames	8-2d	8-36
Rod or other tension bracing	8-2e	8-43
Diaphragms	8-2f	8-45
Foundations	8-2g	8-62
Rehabilitation Techniques for Connections	8-3	8-69
Diaphragm connections	8-3a	8-69
Foundation connections	8-3b	8-79
Rehabilitation with Protective Systems	8-4	8-84
General	8-4a	8-84
Seismic isolation	8-4b	8-84
Energy dissipation	8-4c	8-85
CHAPTER 9 REHABILITATION STRATEGIES AND TECHNIQUES FOR NONSTRUCTURAL SYSTEMS		
General	9-1	9-1
Replacement	9-1a	9-1
Strengthening and stiffening	9-1b	9-1
Repair	9-1c	9-1
Bracing	9-1d	9-1
Attachment	9-1e	9-1
Rehabilitation Criteria for Nonstructural Components	9-2	9-2
Rehabilitation Techniques for		
Nonstructural Architectural Components	9-3	9-2
General	9-3a	9-2
Exterior curtain walls	9-3b	9-3
Appendages	9-3c	9-3
Veneers	9-3d	9-3
Partitions	9-3e	9-4
Ceilings	9-3f	9-4
Lighting fixtures	9-3g	9-4
Glass doors and windows	9-3h	9-5
Raised computer access floors	9-3i	9-5

TABLE OF CONTENTS
(Continued)

		Paragraph	Page
	Rehabilitation of Nonstructural Mechanical and Electrical Components	9-4	9-5
	General	9-4a	9-5
	Mechanical and electrical equipment	9-4b	9-5
	Ductwork and piping	9-4c	9-6
	Sprinkler systems	9-4d	9-7
	Elevators	9-4e	9-7
	Emergency power systems	9-4f	9-7
	Hazardous materials storage systems	9-4g	9-8
	Communications systems	9-4h	9-8
	Computer equipment	9-4i	9-8
CHAPTER 10	**QUALITY CONTROL/QUALITY ASSURANCE**		
	General	10-1	10-1
	Applicability	10-2	10-1
	Special Independent Technical Review (SITR)	10-3	10-1
	Reviewer qualifications	10-3a	10-1
	Review scope	10-3b	10-1
	Review meeting	10-3c	10-1
	Review report	10-3d	10-2
	Evaluation	10-4	10-2
	Rehabilitation Design	10-5	10-2
	Review Process	10-5a	10-2
	Contract specifications	10-5b	10-2
	Construction	10-6	10-2

Appendix A. **References**
Appendix B. **Symbols and Notations**
Appendix C. **Glossary**
Appendix D. **Structural Example Problems**
Appendix E. **Architectural Component Examples**
Appendix F. **Mechanical and Electrical Component Examples**
Appendix G. **Bibliography**
Appendix H. **Checklists for Unreinforced Masonry Bearing-Wall Buildings**

U.S. Army Corps of Engineers
Washington, D.C. 20314-1000

SEISMIC EVALUATION AND REHABILITATION FOR BUILDINGS

LIST OF TABLES

Table No.		Page
2-1.	Preliminary Determinations for Structural and Nonstructural Evaluations	2-2
2-2.	Seismic Use Groups	2-3
2-3.	Structural Performance Levels	2-5
2-4.	Performance Objective	2-6
2-5a.	Seismic Design Category Based on Short-Period Response Accelerations	2-9
2-5b.	Seismic Design Category Based on 1-Second Period Response Accelerations	2-9
4-1.	Preliminary Assessment for Structural Evaluations	4-2
4-2.	Structural Screening (Tier 1)	4-3
4-3.	Checklist Required for a Tier 1 Evaluation	4-3
4-4.	Preliminary Nonstructural Assessment	4-6
4-5.	Nonstructural Screening (Tier 1)	4-7
5-1.	Structural Evaluation (Tier 2)	5-3
5-2.	Tier 3 Structural Evaluation	5-5
5-3.	Nonstructural Evaluation (Tier 2)	5-6
6-1.	Final Assessment	6-2
6-2.	Evaluation Report	6-5
7-1.	Rehabilitation Procedures	7-2
8-1.	Strengthening Options for Reinforced Concrete or Masonry Shear Wall Buildings	8-3
8-2.	Strengthening Options for Unreinforced Concrete or Masonry Buildings	8-13
8-3.	Strengthening Options for Steel Moment-Resisting Frame Buildings	8-18
8-4.	Strengthening Options for Reinforced Concrete Frame Buildings	8-28
8-5.	Strengthening Options for Steel-Braced-Frame Buildings	8-38

U.S. Army Corps of Engineers
Washington, D.C. 20314-1000

SEISMIC EVALUATION AND REHABILITATION FOR BUILDINGS

LIST OF FIGURES

Figure No.		Page
1-1.	Flow Chart for Structural and Nonstructural Evaluation	1-4
2-1.	Performance and Structural Deformation Demand for Ductile Structures	2-7
2-2.	Performance and Structural Deformation Demand for Nonductile Structures	2-8
7-1.	Rehabilitation Procedures	7-3
7-2.	Idealized Component Load Versus Deformation Curves for Depicting Component Modeling and Acceptability	7-8
8-1.	Carbon Fiber Overlay to Enhance Shear Capacity of Masonry Wall	8-6
8-2.	Strengthening of an Unreinforced Masonry Wall	8-7
8-3.	Carbon Fiber Overlay to Enhance Flexural Capacity of Masonry Wall	8-9
8-4.	Rehabilitation of a Welded Moment Connection	8-23
8-5.	Rehabilitation of a Bolted Moment Connection	8-24
8-6.	Strengthening a Pre-Northridge Moment Connection	8-25
8-7.	FRP Overlay to Enhance the Shear and Flexural Capacity of Concrete Beams	8-30
8-8.	Strengthening a Beam Shear Connection	8-35
8-9.	Strengthening of a Column Splice	8-37
8-10.	Strengthening of Single-Angle Bracing	8-41
8-11.	Strengthening an Existing Brace with Secondary Bracing	8-42
8-12.	Providing Shear Transfer for Steel Decking on Steel Joists at Exterior Wall	8-52
8-13.	Modifying Simple Beam Connection to Provide Chord Tension Capacity	8-54
8-14.	Strengthening of a Timber Diaphragm	8-57
8-15.	Chord Splice for Wood Diaphragm	8-58
8-16.	Providing New Chords for Wood Diaphragms	8-59
8-17.	Strengthening an Existing Spread Footing	8-66
8-18.	Strengthening Steel Decking Support for Shear Transfer and Wall Anchorage	8-74
8-19.	Steel Plate Anchorage for Precast Concrete Wall Panels	8-81
8-20.	Strengthening of a Column Base Plate in a Braced Frame	8-83

CHAPTER 1
INTRODUCTION

1-1. Purpose and Scope

a. Purpose. This document provides criteria and furnishes guidelines for the seismic evaluation and upgrading or strengthening of structural and nonstructural systems and components in existing buildings. The rehabilitation provisions of this document presuppose that structural rehabilitation has been selected as the most appropriate and cost-effective mitigation option after consideration and evaluation of other available options for mitigation of the seismic hazard. These guidelines are not specifically intended for the repair of seismically damaged building components or systems.

b. Scope. The guidelines presented in this document for the evaluation and strengthening or upgrading apply to existing structural and nonstructural components and systems that were found to be deficient with respect to their performance objectives. The guidelines are generally in accordance with Federal Emergency Management Agency (FEMA) 310 for evaluation; FEMA 273 and TI 809-04 for analysis and acceptance criteria; and FEMA 302 for design and detailing requirements for the addition of new structural components or systems.

1-2. Applicability

a. General. The criteria in this document are applicable to all entities responsible for the design of military construction in the United States and its territories and possessions. The procedures in this document may be used to verify the performance objectives of any existing construction.

b. Exempted buildings. A military building is exempted from the seismic structural evaluation requirements given herein if any of the following apply, and the building is:

(1) Originally designed according to the 1982 or later edition of Technical Manual (TM) 5-809-10 or the 1988 edition of TM 5-809-10-1, and the design of an alteration does not reduce the strength or increase the earthquake loading of any existing structural system component by more than 10%.

(2) Scheduled for replacement within 5 years.

(3) Classified for agriculture use, or intended only for incidental human occupancy, or occupied by persons for a total of less than 2 hours a day.

(4) A detached one- or two-family dwelling that is located in an area having a short-period spectral response acceleration parameter, S_{DS}; less than 0.4g.

(5) A one-story light steel frame or wood construction with an area less than $280m^2$ (3,000 square feet).

Buildings meeting these structural evaluation exemption requirements must have at least a Tier 1 Screening for geologic site hazards and foundations, and if deemed applicable, a Tier 1 Screening of nonstructural elements.

c. Nonapplicability. Non-building structures and hazardous critical facilities (e.g., nuclear power plants, piers, wharves, dams, and liquefied gas facilities) are not within the scope of this document.

d. Design team. When rehabilitation in accordance with this document is required, the selected design team will include an engineer knowledgeable in seismic design. That engineer will be included in the rehabilitation design process from the beginning to provide guidance in the selection of the appropriate seismic resisting system. Early input and a special peer review team are required when seismic isolation or energy dissipation devices are a potential alternative.

e. Incremental rehabilitation. Incremental rehabilitation may be performed only if, because of a funding shortage, the work required for a complete rehabilitation meeting the criteria prescribed in this document has to be phased and performed in successive fiscal years. In that case, the work will be phased, and the most critical structural deficiencies are the first to be addressed. Partial rehabilitation or rehabilitation to criteria less than prescribed by this document is not permitted.

1-3. References

Appendix A contains a list of references pertaining to this document.

1-4. Basis for Evaluation and Rehabilitation

a. Seismic design criteria. In recent years, developments in earthquake engineering have resulted in substantial changes in seismic design criteria. In the 1960s, major changes began to occur in the seismic design codes. In 1966, the first edition of "Seismic Design for Buildings," also known as the Basic Design Manual (BDM), was introduced (TM 5-809-10/NAVDOCKS P-355/AFM 88-3, Chapter 13, March 1966). In 1973, a new revised and expanded edition of the manual was published (TM 5-809-10/NAVFAC P-355/AFM 88-3, Chapter 13, April, 1973) that included ductility provisions for moment-resisting space frames. In the February 1982 edition, substantial changes were made in force levels and seismic detailing requirements. Many of these changes were in response to experiences from the 1971 San Fernando, California earthquake. In the late 1970s, areas in the United States outside of California and the Pacific Coast area began to be aware of the need for earthquake-resistant design requirements for their facilities. In 1978, "Tentative Provisions for the Development of Seismic Regulations for Buildings" was published by the National Bureau of Standards (NBS SP-510; Applied Technological Council, ATC 3-06; and National Science Foundation, 78-8). These provisions were developed through a nationwide effort to improve seismic design and construction building practices, and are evaluated and updated every three years by a national committee, and approved by the Building Seismic Safety Council (BSSC), a non-profit organization sponsored by the National Institute of Standards and Technology (NIST). The 1997 edition of these provisions is designated as FEMA 302, and is the basis for the design and detailing provisions in this document for new structural components or systems. The 1988 edition of the Uniform Building Code (UBC) adopted many of the FEMA/BSSC provisions, including a response reduction factor, R_w,

but retained the allowable stress basis as opposed to the strength (i.e., yield stress) basis in the FEMA documents. The 1997 edition of the UBC adopts the R factor and strength design and generally mirrors FEMA 302. The 1992 edition of TM 5-809-10/NAVFAC P-355/AFM 88-3, Chapter 13, essentially reflected the 1988 UBC provisions. TI 809-04, which has superseded that document, adopts FEMA 302 provisions for standard occupancy buildings, and modifies FEMA 273 provisions for essential and hazardous occupancies.

b. Existing buildings. Major changes in structural criteria based upon building failures in past earthquakes naturally raise the question of the adequacy of existing buildings. A building designed and constructed prior to the recent changes in seismic design criteria, especially those in areas of high seismicity, will probably not conform to the requirements of today's criteria. In some cases, the general structural system does not conform, and there are some cases where the lateral force levels can be 3 or more times greater than forces used in the original design. This does not necessarily mean that all these buildings are unsafe, or will not be able to perform adequately when subjected to a major or moderate earthquake. Some of the older buildings may actually perform better than new ones that conform to the latest provisions. Many of the performance capabilities of buildings depend on configuration, details, and ability to act in a tough, ductile, energy-absorbing manner rather than on conformance to the minimum standards of the code provisions.

c. Evaluation and rehabilitation. Current codes are developed for new construction and are not necessarily applicable to existing buildings. New construction criteria can more easily be based on system performance parameters than can existing building evaluation criteria. The "R-value" assumptions used in new building designs establish "conforming system" responses by including detailing requirements in the design criteria to provide the level of post-yield ductility associated with each system type. For existing buildings with "nonconforming systems," the evaluation of post-yield seismic response requires assessment of the deformation capacity of individual components of the structural lateral-force-resisting system. This is termed "deformation-based assessment," and is the basis for the evaluations and rehabilitation designs in this document as depicted in Figure 1-1. An existing building should be evaluated on the basis of its actual performance characteristics, as best as they can be determined, when subjected to a realistic postulated earthquake. Modifications of existing buildings must take into account the performance characteristics of the existing materials interacting with the new material used to upgrade the structure. FEMA 178 provided a rapid evaluation technique using true/false responses to sets of statements intended to identify deficiencies in the seismic response of various structural systems. FEMA 310 is an update of FEMA 178, and has been expanded to include performance-based analyses and acceptance criteria adapted from FEMA 273. As indicated in paragraph 1-1b, this document will incorporate provisions from FEMA 310, 273, 302, and TI 809-04. Performance-based evaluation and rehabilitation techniques have been adopted for this document, which means the evaluation of structural adequacy is based on component-based rather than system-based behavior. Although the behavior of individual structural

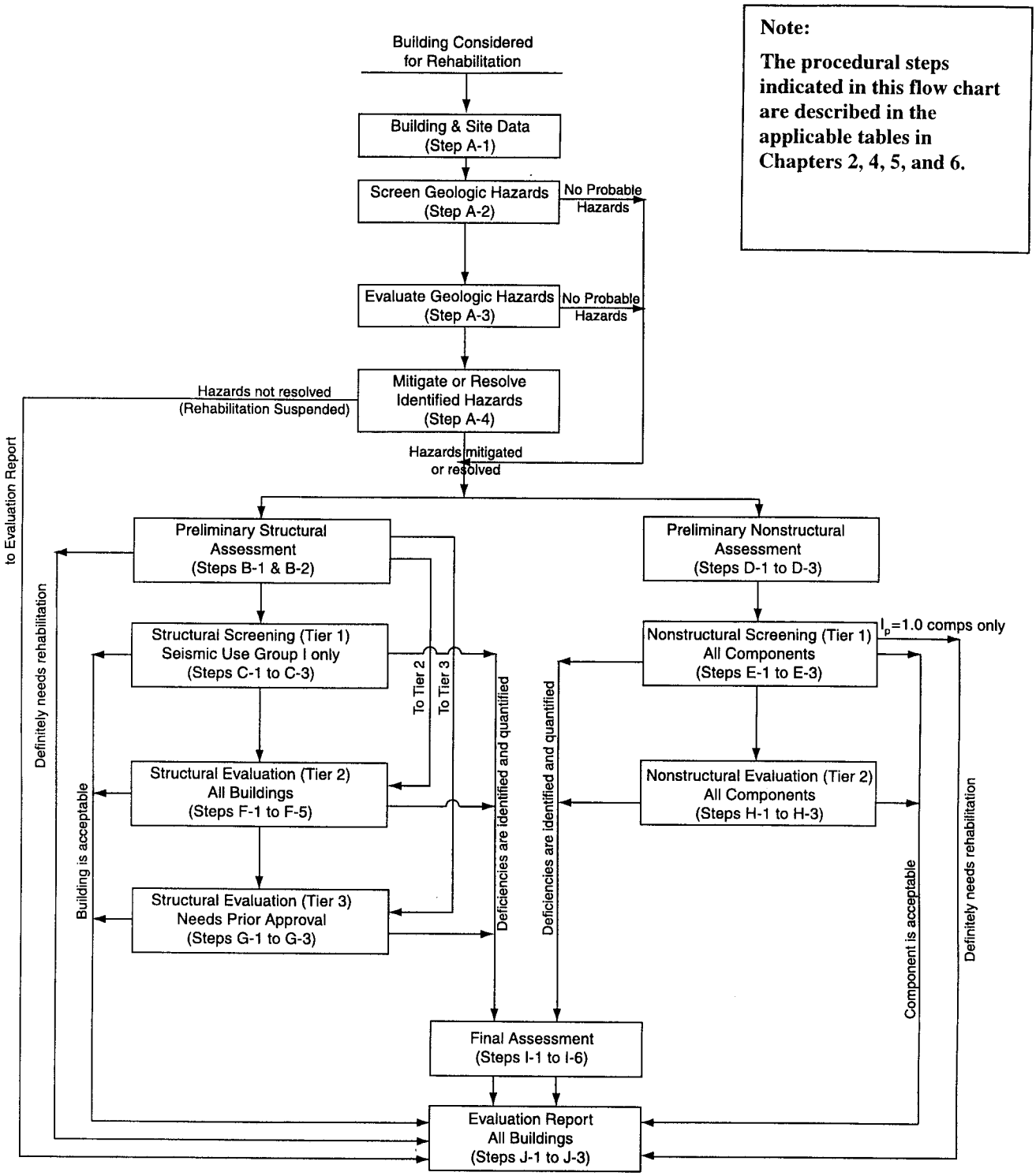

Figure 1-1. Flow Chart for Structural and Nonstructural Evaluation

elements and the damage they sustain during an earthquake are important, the failure of one or more isolated elements to meet specific acceptance criteria for a particular performance objective should not necessarily imply the overall building will not perform to the desired performance objective level. This fact indicates that the subjective qualitative judgment of the engineer is necessary to properly assess the overall performance of the building. Since engineering judgment is widely variant, it is quite possible that engineers can employ the same quantitative evaluation and design methodology, yet arrive at very different predictions about structural performance based on a particular evaluation or design. The combined quantitative/qualitative assessment of building performance involves a number of parameters with inherently associated uncertainties and variabilities. It is difficult to predict precisely the character of the ground motion a building will experience during an earthquake, the strength of existing materials, the quality of construction, the amount of force to individual building elements, the deformation individual building elements will tolerate, and the combined capacities of all elements reacting plastically in a building's total structural system. We must employ a methodology to characterize, in a routine manner, all of these uncertainties and variabilities in a way that can be consistently applied by designers and understood by owner/occupants of the building.

1-5. Background

a. National Earthquake Hazards Reduction Program (NEHRP)

(1) Basis of program. The National Earthquake Hazards Reduction Program (NEHRP) Act, Public Law 101-614, requires that the following be determined; (1) The number of buildings owned or leased [by each federal agency], (2) The seriousness of the seismic risk [to each building], and (3) The value of the buildings at risk. All of these public law requirements were addressed in a general way in the GAO/GGD-92-62 report to Congress. Specific guidance to implement the NEHRP public law concerning seismic safety standards for existing federally owned or leased buildings is given in the federal interagency report, ICSSC RP4, which is adopted for use within the federal government by Executive Order No. 12941.

(2) Historic military buildings are buildings that are listed in a national or state register of historic places or have been designated by the installation commander for historic listing. In general, the buildings are required to meet the same minimum life-safety objectives as all other buildings in the federal inventory, and as such, are not exempted from the hazard reduction program. When dealing with historic structures, however, special considerations must be made that significantly affect costs and methods for mitigating seismic hazards. Section 106 of the National Historic Preservation Act of 1966, as amended, requires a Federal agency head with jurisdiction over a Federal undertaking to take into account the effects of the agency's undertakings on properties included or eligible for National Register of Historic Places, and prior to approval of an undertaking, to afford the Advisory Council on Historic Preservation a reasonable opportunity to comment on the undertaking. Section 110(f) of the Act requires that Federal agency heads, to the

maximum extent possible, undertake such planning and actions as may be necessary to minimize harm to any National Historic Landmark that may be directly and adversely affected by an undertaking, and prior to approval of such undertaking, afford the Council a reasonable opportunity to comment. The 106 process, as it is known, and its implications on the military seismic hazard mitigation program, are beyond the scope of this document. Regulations for compliance with the 106 process are found in "36 CFR Part 800: Protection of Historic Properties, Regulations of the Advisory Council on Historic Preservation Governing the Section 106 Review Process," by the Advisory Council on Historic Preservation, effective October 1, 1986.

b. The Military Risk Reduction Program

In response to Executive Order No. 12941, screening and evaluation of representative buildings at selected military installations was performed in accordance with guidelines prescribed by ICSSC RP4. Documentation of the data pertaining to the screening and evaluation of buildings, and in a few cases, including screening and evaluation of geological hazards and nonstructural components, is available at the installation or division or district offices of the proponent agency. This information, pertaining to specific buildings designated for rehabilitation, shall be used to complement or supplement the screening and evaluation procedures prescribed in Chapters 4 and 5.

CHAPTER 2
BUILDING DATA ACQUISITION AND CLASSIFICATION

2-1. General

This chapter provides guidance for the acquisition of the site and building data required for seismic evaluation and rehabilitation of buildings. It is recognized that some of these data may not be complete or available. It is strongly recommended, however, that a concerted effort be made to acquire all that is available from the various potential sources in order to minimize the on-site physical measurements and documentation of the building attributes that will be necessary for the seismic evaluation and rehabilitation.

2-2. Data Acquisition

Acquisition of available data pertaining to the building, site seismicity, and soil characteristics is designated as Step 1 in the preliminary determination outlined in Table 2-1. The data shall be obtained, preferably prior to the initial site visit, and shall be confirmed during the site visit. The data shall include:

a. Exemptions criteria. The exemption criteria in paragraph 1-2b shall be reviewed for applicability. If any of the criteria apply, the building will be exempt from the provisions of this document.

b. Prior evaluation. The evaluator shall obtain and review copies of all prior evaluations. This is particularly relevant for military buildings that may have been previously screened or evaluated in compliance with Executive Order No. 12491 [paragraph 1-5a(1)].

c. Construction documents. As-built drawings and specifications. Structural shop drawings may also provide useful information.

d. Seismicity. Determine S_S and S_1 from MCE maps (Chapter 3 in TI 809-04).

e. Soil data. Obtain soil capacities from drawings or soil reports for building or from data for adjacent buildings. Determine F_a and F_v.

f. Historical significance. Determine if any of the building features have been classified as being of historical significance [paragraph 1-5a(2)].

g. Building description. When drawings are incomplete or unavailable, a general description of the building, to be developed at the site, shall include:

(1) Building name and identification number

(2) Building dimensions

(3) Photographs of building exterior

(4) Number of stories and story heights

(5) Date constructed

(6) Structural systems description (framing, lateral-load-resisting system, gravity-load-framing system, floor and roof diaphragm construction, basement and foundation systems)

(7) Visual assessment of structural condition

(8) Nonstructural element descriptions (nonstructural elements that interface with the seismic performance of the structure)

Step	Procedure A. Preliminary Determinations (All buildings)	References This Document	FEMA 310	TI 809-04
1.	Obtain building and site data Determine: a. Seismic Use Group b. Structural Performance Levels c. Applicable Ground Motions d. Seismic Design Category	para. 2-2 Table 2-2 Table 2-3 Table 2-4 Tables 2-5a & 2-5b		
2.	Screen for geologic hazards and foundations	para. 3-2	Sec. 3.8	para. F-3
3.	Evaluate geologic hazards (if necessary)	para. 3-3	Sec. 4.7	para. F-4
4.	Mitigate or resolve geologic hazards (if necessary)	para. 3-4		para. F-5

Table 2-1. Preliminary Determinations for Structural and Nonstructural Evaluations

(9) NEHRP building type (Table 2-2 in FEMA 310).

2-3. Performance Classifications

a. General. Seismic performance objectives for a building are defined by a desired performance level for the building (e.g., damage state or ability to perform an essential function) when subjected to a specified seismic hazard (i.e., deterministic or probabilistic ground motion). A performance objective for each of the four Seismic Use Groups (Table 2-2) is prescribed in the following paragraphs. The performance objectives (Table 2-4) are derived from appropriate combinations of three performance levels (Table 2-3) and the design ground motion.

b. Seismic use groups. The following Seismic Use Groups are established based on the occupancy or function of a building.

(1) Group IIIE. Seismic Use Group IIIE buildings are those containing essential facilities that are required for post-earthquake recovery and/or those structures housing mission-essential functions. Mission-essential functions are those absolutely critical to mission continuation of the activity (there is no redundant back-up facility on- or off-site) as determined by the Commanding Officer at the activity and/or the Major Claimant.

(2) Group IIIH. Seismic Use Group IIIH buildings are those containing substantial quantities

Seismic Use Group	Occupancy or Function of Structure
I. Standard Occupancy Structures	All structures having occupancies or functions not listed below.
II. Special Occupancy Structures	Covered structures whose primary occupancy is public assembly with a capacity greater than 300 persons.
	Day care centers with a capacity greater than 150 persons.
	Educational buildings through the 12th grade with a capacity greater than 250 persons.
	Buildings for colleges or adult education schools with a capacity greater than 500 students.
	Medical facilities with 50 or more resident incapacitated patients, but not otherwise designated as Seismic Use Group IIIE facility.
	Jails and detention facilities.
	All structures with occupancy capacity greater than 5,000 persons.
	Structures and equipment in power-generating stations and other public utility facilities not included in Seismic Use Group IIIE, and are required for continued operation.
	Water treatment facilities required for primary treatment and disinfecting of potable water.
	Wastewater treatment facilities required for primary treatment.
	Facilities having high-value equipment, when justification is provided by the using agency.

Table 2-2. Seismic Use Groups

III H. Hazardous Facilities	Structures housing, supporting, or containing sufficient quantities of toxic or explosive substances to be dangerous to the safety of the general public if released.
III E. Essential Facilities	Facilities involved in handling or processing sensitive munitions, nuclear weaponry or materials, gas and petroleum fuels, and chemical or biological contaminants.
	Facilities involved in operational missile control, launch, tracking, or other critical defense capabilities.
	Mission-essential and primary communication or data handling facilities.
	Hospitals and other medical facilities having surgery and emergency treatment areas.
	Fire, rescue, and police stations.
	Designated emergency prepared centers.
	Designated emergency operations centers.
	Designated emergency shelters.
	Power-generating stations or other utilities required as emergency back-up facilities for Seismic Use Group IIIE facilities.
	Emergency vehicle garages and emergency aircraft hangars.
	Designated communications centers.
	Aviation control towers and air traffic control towers.
	Water treatment facilities required to maintain water pressure for fire suppression.

Table 2-2. Seismic Use Groups - Continued

Performance Level	Building Response
CP	Collapse Prevention – The building barely remains standing, with significant structural and nonstructural damage. This level of performance, where collapse is imminent, is an unacceptable performance level for all military buildings.
LS	Life Safety – The building remains stable with significant reserve capacity. Structural damage is moderate, requiring significant post-earthquake repairs; however, collapse is precluded. This is the basic level of performance for all military buildings, except as defined below.
SE	Safe Egress – The building structural system remains fully safe for occupancy following the earthquake. Essential functions are sufficiently disrupted to prevent immediate post-earthquake occupancy of the building. Structural damage is light, allowing fairly rapid post-earthquake repairs.
IO	Immediate Occupancy – The building structure remains safe to occupy and all essential functions remain operational. It may be used for post-earthquake recovery and to perform essential operational military missions within a few hours following an earthquake. The building has limited structural damage, which may be repairable while occupied.

Table 2-3. Structural Performance Levels

Seismic Use Group	Performance Level	Ground Motion
I	Life Safety	2/3 MCE
II	Safe Egress	2/3 MCE
IIIH	Safe Egress	2/3 MCE
IIIE	Immediate Occupancy	2/3 MCE

Table 2-4. Performance Objectives

of hazardous substances that could be dangerous to the safety of the public, if released.

(3) Group II. Seismic Use Group II buildings are those that constitute a substantial public hazard because of the occupancy or use of the building.

(4) Group I. Seismic Use Group I buildings are those that are not assigned to Seismic Use Groups II or III.

(5) Hazardous Critical Facilities. These facilities (e.g., nuclear power plants, dams and LNG facilities are not included within the scope of this document, but are covered by other publications or regulatory agencies. For any facilities housing hazardous items not covered by criteria in this document, guidance should be requested from DAEN-ECE-D (Army); NAVFAC Code 04BA (Navy); or HQ AFCESA/LES (Air Force).

Examples of buildings or structures in each of the above groups are provided in Table 2-2. Buildings with multiple occupancies will be categorized according to the most important occupancy unless the portion of the building that houses the most important occupancy can be shown to satisfy all of the requirements for that occupancy.

c. Performance levels. Three structural performance levels, as described in Table 2-3, are considered by this document. Life Safety is the minimum performance level prescribed for buildings in Seismic Use Group I. Safe Egress is the enhanced performance level prescribed for buildings in Seismic Use Groups II and III H. Immediate Occupancy is the enhanced performance level prescribed for buildings in Seismic Use Group IIIE. The physical significance of these performance levels is indicated in Figures 2-1 and 2-2.

d. Design ground motion. The ground motion derived from 2/3 MCE is the basic ground motion for the FEMA 302 provisions, and is the design ground motion prescribed by this document for the performance levels prescribed for the various seismic use groups in Table 2-2. The derivation of design ground motion is discussed in Chapter 3 of T1 009-04.

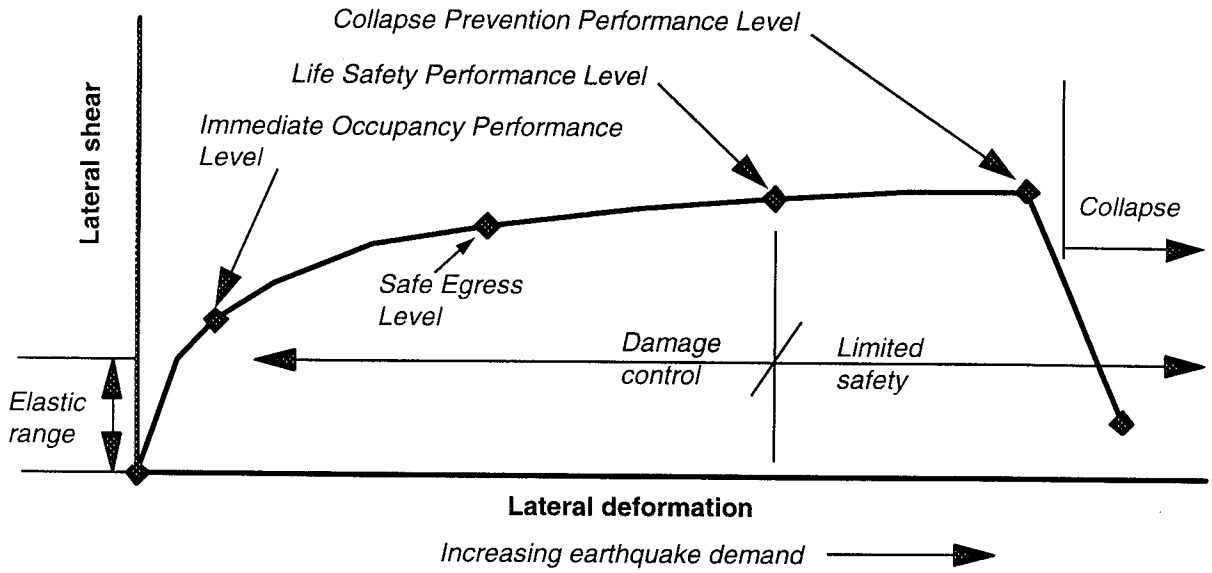

Figure 2-1. Performance and Structural Deformation Demand for Ductile Structures

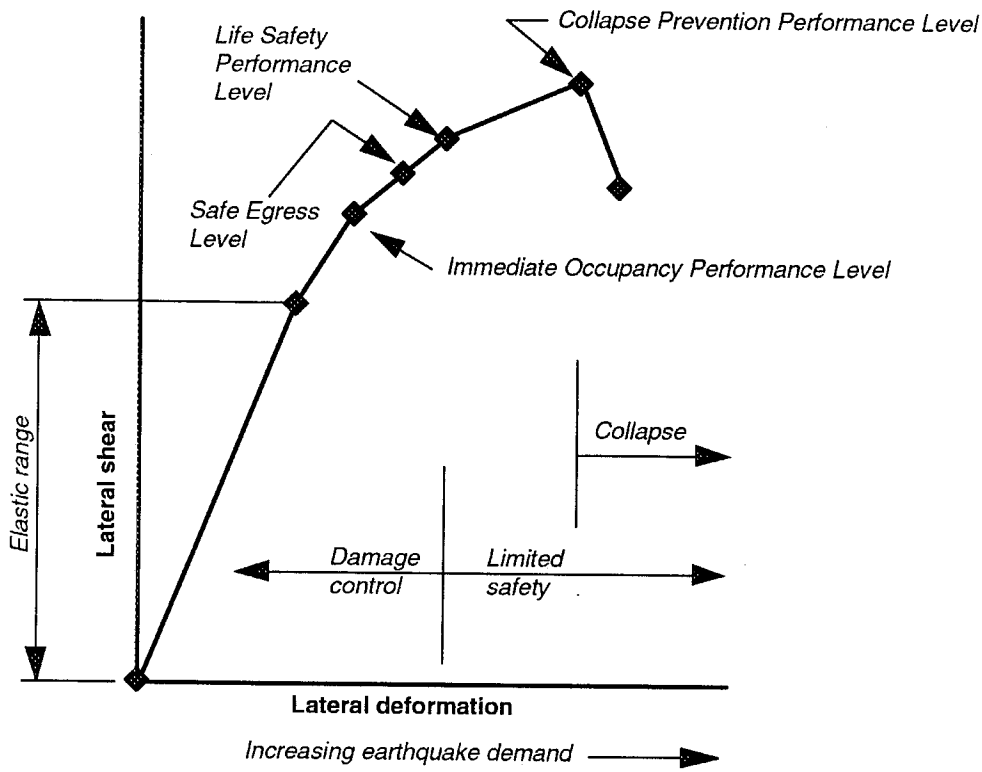

Figure 2-2. Performance and Structural Deformation Demand for Nonductile Structures

e. Performance objectives. The seismic performance objectives for the various seismic use groups in Table 2-2 are indicated in Table 2-4. These performance objectives consist of the combination of the performance levels in Table 2-3 with ground motion derived from 2/3 MCE as described in Chapter 3 of TI 809-04.

f. Seismic design categories. All buildings shall be assigned a Seismic Design Category based on their assigned Seismic Use Group, and their applicable spectral acceleration coefficients S_{DS} and S_{DI} for the ground motion based on 2/3 MCE. Each building or structure shall be assigned to the more severe Seismic Design Category in accordance with Table 2-5a or 2-5b. The category designations are used to define prescriptive reduction in the evaluation and rehabilitation procedures for certain buildings in lower seismic areas.

Value of S_{DS}	**Seismic Use Group**		
	I	II	III
$S_{DS} < 0.167g$	A	A	A
$0.167g \leq S_{DS} < 0.33g$	B	B	C
$0.33g \leq S_{DS} < 0.50g$	C	C	D
$0.50g \leq S_{DS}$	D[a]	D[a]	D[a]

[a]See footnote on Table 2-5b.

Table 2-5a. Seismic Design Category Based on Short-Period Response Accelerations

Value of S_{DI}	**Seismic Use Group**		
	I	II	III
$S_{DI} < 0.067g$	A	A	A
$0.067g \leq S_{DI} < 0.133g$	B	B	C
$0.133g \leq S_{DI} < 0.20g$	C	C	D
$0.20g \leq S_{DI}$	D[a]	D[a]	D[a]

[a] Seismic Use Group I and II structures located on sites with mapped maximum considered earthquake spectral response acceleration at 1-second period, S_1, equal to or greater than 0.75g, shall be assigned to Seismic Design Category E; Seismic Use Group III structures located on such sites shall be assigned to Seismic Design Category F.

Table 2-5b. Seismic Design Category Based on 1-Second Period Response Accelerations

CHAPTER 3
GEOLOGIC HAZARDS EVALUATION

3-1. General

This chapter prescribes screening and evaluation procedures for geologic site hazards. Evaluation of geologic hazards is required for all buildings designated for seismic evaluations, except that buildings in Seismic Design Category A are exempt from the procedures. All identified geologic hazards must be mitigated or otherwise resolved (e.g., the risk associated with the identified geological hazard is considered to be acceptable) by the agency headquarters proponent prior to proceeding with the structural evaluation of the building or the nonstructural components. Screening, evaluation, and mitigation of geologic hazards are indicated as Steps 2, 3, and 4 of the preliminary determinations outlined in Table 2-1.

3-2. Screening for Geologic Hazards

Screening for geologic hazards shall be performed in accordance with paragraph F-3 of Appendix F in TI 809-04, and by completion of the Tier 1 Geologic Site Hazards and Foundations Checklist in FEMA 310, when required by Table 4-3.

3-3. Evaluation of Geologic Hazards

Geologic hazards that cannot be eliminated by the screening procedures prescribed above shall be evaluated by a geotechnical engineer in accordance with paragraph F-4 of Appendix F in TI 809-04.

3-4. Mitigation of Geologic Hazards

Mitigation procedures for geologic hazards shall be in accordance with paragraph F-5 of Appendix F in T1 809-04.

CHAPTER 4
TIER 1 EVALUATION (SCREENING)

4-1. Preliminary Assessment for Structural Evaluations

At this point, the evaluator has reviewed the available drawings, test reports, and other documents pertaining to the design and construction of the building. The evaluator has also visited the site and conducted a visual inspection of the building and has determined that the building does not comply with any of the exemption criteria in paragraph 1-2b. For buildings required by Table 4-3 to be evaluated by the "Geologic Site Hazards and Foundation Checklist" (Section 3.8 of FEMA 310), the evaluator shall confirm that all identified hazards have been mitigated or otherwise resolved before initiating any structural or nonstructural evaluations. Based on these preliminary observations, the evaluator shall make a judgmental decision as to whether the building definitely requires rehabilitation without further evaluation, or whether further evaluation might indicate that the building can be considered acceptable without rehabilitation. These decisions are indicated as steps B1 or B2 in Table 4-1.

a. Definitely requires rehabilitation. Examples that could facilitate this decision include:

(1) Lack of a continuous load path for seismic forces. A common deficiency is the lack of adequate connection between the floor and roof diaphragms and the vertical-resisting elements for in-plane or out-of-plane seismic forces.

(2) Obvious signs of structural distress: excessive cracking of concrete walls or framing members; checking and splitting of timber structural members; or other significant deterioration of the building.

The above are examples of deficiencies that definitely require rehabilitation. Obviously, further evaluation will be required to determine the nature and extent of the required rehabilitation, but such evaluation would not be performed unless structural rehabilitation is the selected option for mitigation of the seismic hazard.

b. Evaluation is required. If it can be reasonably determined that continuous load paths exist to resist lateral forces, and no significant structural distress is observed, evaluation is required to determine whether the building meets the minimum acceptance criteria to mitigate the seismic hazard. FEMA 310 provides three tiers of evaluation that are described in paragraph 4-2. The evaluator needs to understand the advantages and the limitations of each tier so that a selection can be made as to the most effective level of evaluation that will provide conclusive results regarding the seismic adequacy of the building.

c. Quality control/quality assurance. The quality control/quality assurance procedures outlined in Chapter 10 will apply to all evaluation and rehabilitation performed in accordance with this document.

Step	Procedure B. Preliminary Structural Assessment (All buildings)	References This Document	FEMA 310	TI 809-04
1.	Definitely needs rehabilitation without further evaluation	para. 4-1a		
2.	Requires evaluation a. Screening (Tier 1 evaluation for Seismic Use Group I buildings only) b. Tier 2 evaluation c. Tier 3 evaluation	paras. 4-1b and 4-2		

Table 4-1. Preliminary Assessment for Structural Evaluations

4-2. Selection of Structural Evaluation Levels

a. General. Table 3-3 in FEMA 310 indicates the limitations of a Tier 1 evaluation for the various FEMA model building types in regions of low,moderate, and high seismicity. Table 2-1 in FEMA 310 defines these regions of seismicity in terms of S_{DS} and S_{D1}. For evaluations performed in accordance with this document, a Tier 2 or Tier 3 evaluation may be performed in lieu of the Tier 1 evaluation, when it is considered that the lower-tier evaluation would not produce conclusive results. Seismic Use Group IIIE buildings will be evaluated only by Tier 2 or Tier 3 evaluations, and the I0 performance level in Table 3-3 and in the Tier 1 evaluations of FEMA 310 will be interpreted as representing the Safe Egress performance level for Seismic Use Groups II and IIIH. Tier 2 evaluations will be adequate for most buildings that bypass, or cannot be accepted by, the Tier 1 evaluation. The m factors for Tier 2 evaluation of Seismic Use Group II and III H buildings with a Safe Egress (SE) performance objective shall be assumed to be midway between the values for the IO and LS performance levels tabulated in Chapters 3 and 4 of FEMA 310. Highly irregular or unusual buildings may require a Tier 3 evaluation using nonlinear analytical procedures, and may be designated to bypass both the Tier 1 and Tier 2 evaluations with the prior approval.

b. Tier 1 structural screening. This evaluation, as outlined in Table 4-2, requires compliance with selected checklist statements in Chapter 3 of FEMA 310, as indicated in Table 4-3. For unreinforced masonry (URM) bearing-wall buildings to be evaluated in accordance with this document, Table 3-3 of FEMA 310 shall be modified to permit Tier 1 structural screening for such Seismic Use Group I buildings with flexible diaphragms in all regions of seismicity, and for all such buildings with rigid diaphragms in a low region of seismicity.

Step	Procedure C. Structural Screening (Tier 1)	References This Document	FEMA 310	TI 809-04
1.	Determine applicable checklist	para. 4-3a Table 4-3		
2.	Complete applicable checklist	para. 4-3a	Sec. 3.6, 3.7 or 3.7S	
3.	Evaluate screening results a. Building is acceptable b. Deficiencies have been identified and need to be assessed for rehabilitation c. Needs further evaluation	para. 4-3b		

Table 4-2. Structural Screening (Tier 1)

Seismic Design Category	(2) Required Checklist					
	(1) Region of Low Seismicity (Sec. 3.6)	(1) Basic Structural (Sec. 3.7)	(1) Supplemental Structural (Sec. 3.7S)	Geologic Site Hazard & Foundation (Sec. 3.8)	(3) Basic Nonstructural (Sec. 3.9.1)	(3) Supplemental Nonstructural (Sec. 3.9.1S)
A	✓					
B & C		✓		✓	✓	
D, E & F		✓	✓	✓	✓	✓

(1) Limited to Seismic Use Group I only.
(2) Section numbers indicated refer to FEMA 310.
(3) See paragraph 4-4-b(1) for exemption of nonstructural components.

Table 4-3. Checklist Required for a Tier 1 Evaluation

Seismic Use Group I URM bearing-wall buildings with rigid diaphragms in other regions of seismicity may be evaluated by Tier 1 structural screening, provided they do not exceed 6 stories in height in moderate regions of seismicity, or 3 stories in regions of high seismicity. Basic and supplemental structural checklists for URM bearing-wall buildings are provided in Appendix H.

c. Tier 2 structural evaluation. Buildings selected to bypass the Tier 1 screening phase, or that have seismic deficiencies identified by the screening phase and designated for evaluation, shall be evaluated in accordance with the procedures prescribed in Chapter 4 of FEMA 310, as modified by Chapter 5 of this document. The evaluation may be "deficiencies only" or "full building," based on the nature and extent of the deficiencies and the judgment of the evaluator. All buildings in Seismic Use Group IIIE shall be subjected to a "full building" evaluation.

d. Tier 3 structural evaluation. This evaluation consists of performing either a nonlinear static procedure (NSP), or a nonlinear dynamic procedure (NDP), in accordance with Sections 3.3.3 and 3.3.4, respectively, of FEMA 273. The NDP is not recommended for buildings governed by this document, and the NSP will require prior authorization.

4-3. Tier 1 Structural Checklists

a. General. When a Tier 1 evaluation has been selected in accordance with paragraph 4-2, the evaluation of structural systems will consist of completing the Region of Low Seismicity (Section 3.6), Basic Structural (Section 3.7), and Supplemental Structural (Section 3.75) Checklists in FEMA 310 as required by Table 4-3. These checklist statements shall be marked as being compliant (C), non-compliant (NC), or not applicable (NA). Quick checks that are required to complete a checklist statement shall be performed in accordance with Section 3.5 of FEMA 310.

b. Tier 1 structural screening results. The results of a Tier 1 evaluation will be:

(1) The building is acceptable (Seismic Use Group I buildings only).

(2) Identified deficiencies require assessment for rehabilitation.

(3) The Tier 1 evaluation is inconclusive, and further evaluation may indicate that the building meets the acceptance criteria. The evaluator should determine whether a Tier 2 evaluation will be conclusive, or whether a Tier 3 evaluation is required.

4-4. Tier 1 Nonstructural Evaluation (Screening)

The seismic evaluation procedures for nonstructural systems and components described in this chapter are adapted from the provisions of FEMA 310, and are intended to be performed by the engineer responsible for the evaluation of the building, and to be accomplished concurrently with the structural evaluation.

a. Scope. Nonstructural features to be included are permanent nonstructural components, the attachments for them, and the attachments for equipment supported by a structure, the failure of which poses a threat to human life. Nonstructural elements, hereinafter referred to as items, include architectural features, fire protection systems, mechanical and electrical equipment, utilities, storage racks, communication systems, exterior cladding, and tanks. The scope of the vulnerability assessments described in this chapter includes the adequacy of the supports, anchorage, or bracing of the nonstructural systems or components in a building with respect to

protection of the life-safety of the occupants, or precluding the interruption of an essential function in the building. The survivability of function of the internal components of adequately anchored and supported essential equipment is beyond the scope of this document. If assurance of survivability is necessary, it must be obtained by appropriate testing performed by the equipment manufacturer.

b. Preliminary assessment. The evaluator shall perform a preliminary assessment of the nonstructural components at the building site, based upon available drawings and visual inspection of the accessible components. The assessment procedures are outlined in Table 4-4, and described in the following paragraphs. Most nonstructural components in military buildings are either visible, or representative installation is accessible in unfinished spaces (e.g., janitor's closets and storerooms). For inaccessible components, the removal and repair of finishes and the disruption of the personnel in the building may not be warranted. The evaluator may be able to extrapolate adequate information from similar accessible components in the same or similar buildings.

(1) Classification of components. All non-structural components not exempted by the provisions of paragraph 4-4b(1) above shall be assigned an importance factor, I_p, as indicated below. The architectural, mechanical, and electrical components and systems of an historic building may be very significant, especially if they are original to the building, very old, or innovative. An assessment of their importance by the installation commander may be necessary, in addition to the evaluation procedure prescribed in this document.

$I_p = 1.5$ Life-safety component is required to provide safe egress.

$I_p = 1.5$ Component contains hazardous contents.

$I_p = 1.5$ Storage racks in occupancies open to the general public (e.g., warehouse retail stores).

$I_p = 1.0$ All other components.

In addition, for structures in Seismic Use Group IIIE:

$I_p = 1.5$ All components needed for continued operation of the facility or whose failure could impair the continued operation of the facility.

(2) Exempt components. The following components are exempt from the requirements of this chapter.

(a) All components in Seismic Design Category A;

(b) Architectural components in Seismic Design Category B other than parapets supported by bearing walls or shear walls when the importance factor (I_p) is equal to 1.00;

(c) Mechanical and electrical components in Seismic Design Category B;

(d) Mechanical and electrical components in Seismic Design Category C when the importance factor (I_p) is equal to 1.00;

(e) Mechanical and electrical components in Seismic Design Categories D, E, and F that are mounted at 4 ft (1.22 m) or less above a floor level and weigh 400 lb. (1780 N) or less, and are not critical to the continued operation of the structure; or

Step	Procedure D. Preliminary Nonstructural Assessment (All buildings)	References This Document	FEMA 310	TI 809-04
1.	Determine component classification	para. 4-4b(1)		
2.	Determine exemption status	para. 4-4b(2)		
3.	Determine component disposition a. $I_p = 1.0$ components Tier 1 screening b. $I_p = 1.5$ components Tier 1 screening Tier 2 evaluation	para. 4-4b(3)		

Table 4-4. Preliminary Nonstructural Assessment

(f) Mechanical and electrical components in Seismic Design Categories C, D, E, and F that weigh 20 lb. (95 N) or less, or for distribution systems, weigh 5 lb./ft (73 N/m) or less.

Note that most components in Seismic Use Group I buildings will have an I_p of 1.0, but may also have components required for safe egress with an I_p of 1.5. Similarly, components in Seismic Use Group IIIE buildings may have components identified for normal service (I_p = 1.0) and for safe egress (I_p = 1.5), as well as continued operation (I_p = 1.5).

(3) Disposition. All nonstructural components, except those exempted by the criteria in paragraph 4-4b(2), shall be screened by the Tier 1 evaluation of FEMA 310.

c. Nonstructural screening (Tier 1).

(1) General. Screening of all nonstructural components shall be performed by completion of the Basic Nonstructural Component Checklist (Section 3.9.1) and the Supplemental Nonstructural Component Checklist (Section 3.9.15), as required by Table 4-3, and as outlined in Table 4-5.

(2) Results of the screening. The results of the Tier 1 evaluation shall be:

(a) All nonstructural components are compliant. No further evaluation or rehabilitation is required (I_p = 1.0 components only).

Step	Procedure	References		
		This Document	FEMA 310	TI 809-04
	E. Nonstructural Screening (Tier 1) (All components)			
1.	Determine applicable checklist	para. 4-4c Table 4-3		
2.	Complete applicable checklist	para. 4-4c(1)	Sec. 3.9.1 and 3.9.1S	
3.	Evaluate screening results a. Component is acceptable b. Needs further evaluation c. Definitely needs rehabilitation	para. 4-4c(2)		

Table 4-5. Nonstructural Screening (Tier 1)

(b) All nonstructural components are compliant, but the building contains some $I_p = 1.5$ components that require a Tier 2 evaluation.

c) Some noncompliant components have been identified in the Tier 1 evaluations that may be found to be acceptable by a Tier 2 evaluation.

(d) Some noncompliant components definitely need rehabilitation without further evaluation (e.g., complete omission of required bracing or anchorage).

4-5. Assessment of Tier 1 Screening Results

a. Structural. The results of the Tier 1 structural screening that are categorized by paragraph 4-3b(3) need to be assessed as to the appropriate analytical procedure for the detailed evaluation. A Tier 2 evaluation will generally be appropriate for most military buildings, but a Tier 3 evaluation may be required for highly irregular or unusual buildings. Guidance as to when a Tier 3 nonlinear evaluation is required is provided in paragraph 5-4b of T1 809-04.

b. Nonstructural. The results of the Tier 1 nonstructural screening that are categorized by paragraph 4-4c(2)(c) need to be assessed as to whether the noncompliant components can be shown to be acceptable by the Tier 2 evaluation, or whether the deficient components should be designated for the final assessment procedure described in paragraph 6-2.

CHAPTER 5
TIER 2 AND TIER 3 EVALUATIONS

5-1. General

Tier 2 and Tier 3 evaluations shall be performed in accordance with the provisions of Chapters 4 and 5 in FEMA 310. Paragraph 4-2a of this document provides guidance for the selection of the appropriate Tier for structural evaluation. Evaluation of nonstructural deficiencies identified by Tier 1 screening is performed only with a Tier 2 evaluation.

a. Ground motion. The ground motion for all Tier 2 and Tier 3 evaluations shall be derived from 2/3 MCE as defined in Section 3.5.2.3.1 of FEMA 310.

b. Tier 2 evaluation shall be performed in accordance with the provisions of Chapter 4 of FEMA 310.

(1) Structural evaluations.

(a) Buildings designated for Tier 2 evaluation based on results of Tier 1 screening may be evaluated by a "deficiencies only" evaluation or a "full-building" evaluation.

(b) Buildings that were designated to bypass the Tier 1 evaluation shall be evaluated by a Tier 2 "full building" evaluation.

(c) Unreinforced masonry (URM) bearing wall buildings with flexible diaphragms shall be evaluated by the Tier 2 Special Procedure.

(2) Nonstructural evaluations shall be performed in accordance with the provisions of Section 4.8 of FEMA 310.

c. Tier 3 structural evaluation. This static nonlinear procedure may be appropriate for some highly irregular or unusual buildings. Guidance as to when nonlinear procedures are required is provided in paragraph 5-4 of T1 809-04. Implementation of this procedure requires prior approval.

d. Directional effects. The lateral-load-resisting system shall be demonstrated to be capable of responding to lateral forces in any horizontal direction. For buildings with orthogonal primary axes, structural response in each orthogonal direction may be considered independently. In addition, the combined effect of simultaneous response in both directions shall be considered when prescribed by Section 4.2.3.5 of FEMA 310.

e. P-Δ effects. The building shall be investigated to ensure that lateral drifts induced by earthquake response do not result in a condition of global instability under gravity loads. Potential instability shall be investigated in each direction of seismic loading in accordance with Section 2.11.2 of FEMA 273.

f. Torsion. Buildings with stiff or rigid diaphragms, as defined in paragraph 7-7b of T1 809-04, shall be investigated for real and accidental torsion, as prescribed in Section 4.2.3.2 of FEMA 310.

5-2. Structural System Evaluations

The primary purpose of the structural evaluations is to determine whether an existing building is acceptable for its designated performance objective, or if it has deficiencies that could be mitigated by rehabilitation. If the identified deficiencies are obvious, no further structural evaluation should be performed, if the additional expenditure of available funds would be better employed in assessing the adequacy of the structural retrofit in the rehabilitation phases, rather than further quantifying the degree of deficiency of the structural members in the evaluation phase. It should be noted that prior FEMA evaluation documents (e.g., FEMA 178) prescribed seismic evaluations with linear analyses using R factors, nominal strength, and reduced seismic demands (i.e., reduced C_S factors for base shear). FEMA 273 prescribes unreduced probabilistic seismic demands (10 percent probability of exceedance in 50 years) with linear analyses using expected strength values, Q_{CE}, modified by m factors for deformation-controlled components and lower-bound strength values, Q_{CL}, for force-controlled components. FEMA 310 also uses unreduced seismic demands (2/3 MCE) amplified by a modification factor, C, with linear analyses that increase the capacity of structural components, as compared to FEMA 273, by modifying the m factors for deformation-controlled components, and by the use of expected strength, Q_{CE}, rather than the lower-bound strength, Q_{CL}, for force-controlled components. Tier 2 and Tier 3 evaluations performed in accordance with this document are generally in accordance with the provisions of FEMA 310, except as noted in the following paragraphs.

a. Tier 2 procedures.

(1) Scope.

(a) "Deficiencies-only" evaluation consists of a limited structural analysis in accordance with the referenced Chapter 4 sections of FEMA 310 for each noncompliant statement in the applicable Tier 1 checklist.

(b) "Full-building" evaluation consists of a detailed structural analysis as outlined in Table 5-1, and prescribed in Chapter 4 of FEMA 310.

(2) Analytical procedures. The analysis may be performed by either the Linear Static Procedure (LSP), or the Linear Dynamic Procedure (LDP), as described in Sections 4.2.2 and 4.2.3, respectively, of FEMA 310. Guidance for the selection of the LSP or the LDP is provided in paragraphs 5-2 and 5-3 of TI 809-04. The ground motions to be used in the analysis shall be as indicated in Table 2-4. Seismic shear forces shall be calculated in accordance with Section 3.5.2 of FEMA 310. The Special Procedure, as prescribed in Section 4.2.6 of FEMA 310, shall be used for URM bearing wall buildings.

(3) Nominal strength values for structural materials based on the available drawings and/or test reports can be used as a basis for evaluation, provided the values are reasonably consistent with the observed structural condition. In the absence of available material strength data, default values provided in the various material chapters of FEMA 273 shall be used, again subject to reasonable correlation with visual observation during the site visit. Should the

Step	Procedure	References		
		This Document	FEMA 310	TI 809-04
	F. Structural Evaluation (Tier 2)			
1.	(All Seismic Use Group II and III buildings Designated Seismic Use Group I buildings) Select appropriate analytical procedure a. Linear static procedure (LSP) b. Linear dynamic procedure (LDP) c. Special procedure (URM bearing wall buildings only)	para. 5-2a(2)	Sec. 4.2.2 Sec. 4.2.3 Sec. 4.2.6	
2.	Determine applicable ground motion	Table 2-4		
3.	Perform structural analysis a. LSP and LDP b. Special Procedure	para. 5-2a(1)	Sec. 4.2.2 and 4.2.3 Sec. 4.2.6	
4.	Acceptance criteria a. LSP and LDP (1) Deformation-controlled actions (2) Force-controlled actions b. Special procedure	para. 5-2a(4)(a) para. 5-2a(4)(b) para. 5-2a(4)(c)	Sec. 4.2.4 and 4.2.5 Sec. 4.2.5 and 4.2.6	
5.	Evaluation results a. Building is acceptable b. Structural deficiencies have been identified and quantified c. Evaluation is inconclusive, needs Tier 3 evaluation	para. 5-2a(5)		

Table 5-1. Structural Evaluation (Tier 2)

evaluation indicate that the evaluation results are sensitive to these assumed strength values, destructive or nondestructive testing shall be performed prior to rehabilitation design.

(4) Acceptance criteria

(a) Deformation-controlled actions. Deformation-controlled actions in primary and secondary components and elements shall satisfy Equation 5-1.

$$mQ_{CE} \geq Q_{UD} \qquad (5\text{-}1)$$

where:

Q_{UD} = Action due to combined gravity and earthquake loading calculated in accordance with Section 4.2.4.3.1 of FEMA 310.

m = Component or element demand modifier to account for expected ductility of the deformation associated with this action at the selected performance level. Tables 4-3 to 4-6 in FEMA 310 provide m values for various structural components.

Q_{CE} = Expected strength of the component or element at the deformation level under consideration for deformation-controlled actions.

For Q_{CE}, the expected strength shall be determined considering all coexisting actions acting on the component under the design loading condition. Procedures to determine the expected strength are given in Chapters 4 through 8 of FEMA 273. In the absence of prescribed values for Q_{CE}, the default value of 1.25 times the nominal strength (1.25 Q_{CN}) shall be assumed.

(b) Force-controlled actions. Force-controlled actions in primary and secondary components and elements shall satisfy Equation 5-2. (This equation replaces Equation 4-13 in FEMA 310).

$$Q_{CN} \geq Q_{UF} \qquad (5\text{-}2)$$

where:

Q_{CN} = Nominal strength of the component or element.

Q_{UF} = Action due to combined gravity and earthquake loading calculated in accordance with Section 4.2.4.3.2 of FEMA.

(c) Special Procedure. Acceptability of structural components in URM bearing wall buildings shall be in accordance with the provisions of Section 4.6 of FEMA 310.

(d) Out-of-plane wall forces shall be computed in accordance with Section 4.5 of FEMA 310.

(5) Evaluation results. The results of a Tier 2 evaluation will be:

(a) The building is acceptable.

(b) Structural deficiencies have been identified and quantified.

(c) The Tier 2 evaluation is inconclusive, but a Tier 3 evaluation may indicate that the building meets the acceptance criteria.

b. Tier 3 procedures.

(1) General. This procedure shall be used for the evaluation of structures in Seismic Use Groups II and III, with the characteristics described in Paragraph 5-4b of TI 809-04. Acceptance criteria are also provided for this procedure to satisfy the Life-Safety performance objective, but the use of this procedure for that performance objective requires specific authorization. Step-by-step procedures for this evaluation are outlined in Table 5-2.

(2) Analytical procedures. This evaluation consists of performing either a Nonlinear Static Procedure (NSP), or a Nonlinear Dynamic Procedure (NDP), in accordance with Sections 3.3.3 or 3.3.4, respectively, of FEMA 273. The NDP is not recommended for buildings governed by this document, and the NSP will require prior authorization.

(3) Acceptance criteria. The acceptance criteria for the Tier 3 evaluation shall be as prescribed in paragraph 7-2f(5)(d)2 for structural rehabilitation except that the spectral ordinates, S_a, to establish the target displacement, δ_t, shall be reduced to 75 percent of the prescribed values in accordance with paragraphs 5.2.1 and 5.2.2 of FEMA 310. For Tier 3 evaluations performed in accordance with this document, this exception shall apply only to Seismic Use Group I buildings.

(4) Evaluation results. The results of Tier 3 evaluation will be:

(a) The building is acceptable.

(b) Deficiencies have been identified and quantified.

		References		
Step	**Procedure** G. Structural Evaluation (Tier 3)	**This Document**	**FEMA 273**	**TI 809-04**
1.	(Requires prior approval) Perform static nonlinear analysis a. Construct "push-over" curve b. Determine target displacement c. Check interstory drift d. Check inelastic responses	para. 5-2b(2)	Sec. 3.3.3	Table 4-7
2.	Acceptance criteria a. Deformation-controlled components b. Force-controlled components	para. 5-2b(3)		Chap. 7
3.	Evaluation results a. The building is acceptable b. Structural deficiencies have been identified and quantified	para. 5-2b(4)		

Table 5-2. Tier 3 Structural Evaluation

5-3. Nonstructural Systems Evaluation

a. General. The Tier 2 evaluation of nonstructural components found to be noncompliant with the Tier 1 screening checklist statements shall be in accordance with applicable provisions of Section 4.8 of FEMA 310 referenced by the checklist statements, except that Equation 4-36 in FEMA 310 shall be replaced by Equation 10-1 in TI 809-04. Step-by-step procedures are outlined in Table 5-3.

b. Seismic demands on nonstructural components shall be calculated in accordance with Section 4.2.7 of FEMA 310.

(2) Some components have deficiencies that are identified and quantified.

c. Drift ratios and displacements shall be determined in accordance with Section 4.2.7 of FEMA 310, and shall be evaluated against the allowable values in Section 11.9 and 11.10 of FEMA 273.

d Evaluation results. The results of the Tier 2 nonstructural evaluation will be:

(1) All components are acceptable.

(2) Some components have deficiencies that are identified and quantified.

		References		
Step	**Procedure** H. Nonstructural Evaluation (Tier 2) (All $I_p = 1.5$ components and designated $I_p = 1.0$ components)	**This Document**	**FEMA 310**	**TI 809-04**
1.	Determine component importance factor	para. 4-4b		
2.	Perform structural analysis	para. 5-3b para. 5-3c	Sec 4.8	para. 10-1
3.	Evaluation results a. All components are acceptable b. Some components have deficiencies that have been identified and quantified	para. 5-3d		

Table 5-3. Nonstructural Evaluation (Tier 2)

CHAPTER 6
FINAL ASSESSMENT AND REPORT

6-1. Final Structural Assessment

The following paragraphs describe the final assessment of the seismic screening and/or evaluation of a building. The procedures are outlined in Table 6-1, Steps 1, 2, and 3.

a. Structural evaluation assessment. Upon completion of the structural screening and/or evaluation, the results need to be reviewed so that an appropriate recommendation can be formulated as to the disposition of the building. The assessment to be made by the evaluator shall be based on the following evaluation results:

(1) Quantitative.

(a) The building is acceptable.

(b) Deficiencies exist in the structural components and are identified and quantified.

(c) Deficiencies exist in the global structural system responses (i.e., drift, torsion, etc.) and are identified and quantified.

(2) Qualitative.

(a) The building is acceptable. In recognition of the fact that the costs of rehabilitation are not always directly proportional to the benefits derived, the evaluator shall review the deficiencies identified by the quantitative results of the evaluation to determine whether costly and disruptive rehabilitation procedures were "triggered" by marginal deficiencies in a single structural component. In such cases, a 10 to 15 percent reduction in the calculated seismic demands will be permissible, if the reduction can eliminate the need for the rehabilitation of the component.

(b) The building needs rehabilitation but is not a serious hazard to life safety. This assessment may be based on the following results of the evaluation:

1. The deficiencies are minor and can be mediated with a "quick fix."

2. Load paths for lateral forces are indirect, but provide significant capacity.

3. A valid structural system to resist lateral forces exists, but requires additional strength and/or stiffness.

(c) The building is a serious life safety hazard and rehabilitation is required.

1. The load paths are incomplete or discontinuous.

2. The existing structural systems require strengthening and/or additional stiffness.

3. A new structural system (i.e., shear walls or braced frames) is required to supplement the existing systems.

b. Structural rehabilitation strategy. When assessment of the results of the evaluation indicate that rehabilitation is required, the evaluator shall

Step	Procedure I. Final Assessment	References This Document
1.	Structural evaluation assessment Quantitative Building is acceptable. Deficiencies in structural components are identified and quantified. Deficiencies in structural responses are identified and quantified. Qualitative Building is acceptable. Building needs rehabilitation but is not a serious hazard to life safety. Building is a serious life safety hazard and rehabilitation is required.	6-1a
2.	Structural rehabilitation strategy.	6-1b
3.	Structural rehabilitation concept.	6-1c
4.	Nonstructural evaluation assessment Quantitative Bracing and/or support of all components is compliant. Deficiencies exist and are identified and quantified. Qualitative Bracing and/or support of all components is acceptable. Some deficiencies exist, but failure would not affect essential functions or life safety. Deficiencies could effect life safety or essential functions.	6-2a
5.	Nonstructural rehabilitation strategy.	6-2b
6.	Nonstructural rehabilitation concept.	6-2c

Table 6-1. Final Assessment

investigate the optional strategies discussed in Tables 8-1 through 8-5 of Chapter 8, and qualitatively determine the impact of each applicable strategy on:

(1) Expected seismic performance of the rehabilitation.

(2) Required alteration to the existing structural system.

(3) Required demolition and replacement of building finishes.

(4) Disruption of building functions.

(5) Architectural/historic considerations.

(6) Relative costs.

c. Structural rehabilitation concept. A feasible rehabilitation concept, based on the optimum strategy, shall be developed. The purpose of the concept is to define the nature and extent of the rehabilitation in sufficient detail to allow the preparation of a preliminary cost estimate to establish program budget. The preparation of the concept shall include the definition of any of the major structural components that have a significant impact on construction costs, and adequate plans, sections, and representative details to define the rehabilitation. The concept shall include a brief narrative description of the rehabilitation, the design criteria, and the preliminary cost estimate. It should be noted that the structural rehabilitation will be based on forces and/or deformations larger than those recognized by the evaluation, and that the extent and cost of the rehabilitation may therefore exceed that suggested by the evaluation.

6-2. Final Nonstructural Assessment

The following paragraphs describe the final assessment of the seismic screening and/or evaluations of non-structural components. The step-by-step procedures are outlined in Table 6-1 as Steps 4, 5 and 6.

a. Nonstructural evaluation assessment. An assessment of the results of the nonstructural evaluation shall be based on the following evaluation results:

(1) Quantitative.

(a) Bracing and/or support of all the nonstructural components is compliant.

(b) Deficiencies exist and are identified and quantified.

(2) Qualitative.

(a) Bracing and/or support of all of the nonstructural components is acceptable. As discussed for structural deficiencies in paragraph 6-1a(2)(a), the evaluator shall evaluate the quantitative results to determine whether a 10 to 15 percent reduction in the seismic demand forces for a few components can avoid a costly and/or disruptive rehabilitation.

(b) Some components need rehabilitation but component failure would not affect essential functions in the building, and the components are not a serious life safety hazard.

(c) The deficient components are a serious life safety hazard, and/or their failure could affect essential functions. Rehabilitation is required.

b. Nonstructural rehabilitation strategy. General rehabilitation options for nonstructural components are discussed in paragraph 9-1. Various rehabilitation strategies for architectural components are presented in paragraph 9-3, and for mechanical and electrical components in paragraph 9-4.

c. Nonstructural rehabilitation concept. A preliminary rehabilitation concept shall be developed to implement the selected rehabilitation option for each of the deficient components. This concept shall be coordinated so as to be compatible with the selected structural rehabilitation strategy. If feasible, the nonstructural rehabilitation shall be indicated on the structural drawings by an appropriate symbol, and described in a legend [e.g., (1) Provide bolts for emergency motor generator; (2) Add new brace for fan unit]. Graphic detail of the components to be rehabilitated may not be necessary if photographs of the deficiencies and descriptions of the rehabilitation are provided in the descriptive narrative that accompanies the concept. As for the structural concept, in addition to a descriptive narrative, the nonstructural concept shall include the design criteria and a preliminary cost estimate. Design is not necessary for this concept. The sizes of members and connections can be estimated by the evaluator based on the observed deficiencies; however, the nature and extent of the necessary demolition and repair of existing materials to perform the rehabilitation must be described in the descriptive narrative, and reflected in the cost estimate.

6-3. Evaluation Report

a. General. An evaluation report, as outlined in Table 6-2, shall be prepared to summarize the results of the evaluation of structural systems and nonstructural components in each building that is designated for evaluation as a potential candidate for rehabilitation. The following paragraphs describe the executive summary, the descriptive narrative portions, and the appendices that constitute the report.

b. Executive summary. The body of the report shall be preceded by an executive summary that provides a brief summary of the following:

(1) Description of the building, its structural systems, and nonstructural components.

(2) Results of geologic hazard evaluation and resolution of identified hazards.

(3) Levels of evaluation performed (e.g., Tier 1 and Tier 2).

(4) General descriptions of structural deficiencies and rehabilitation concept, including preliminary estimate.

(5) General description of nonstructural deficiencies, including preliminary cost estimate.

c. Descriptive narrative.

(1) General. Summarize the following:

(a) Building and site data in paragraph 2-2.

(b) Performance classifications in paragraph 2-3.

Step	Procedure J. Evaluation Report	References This Document
1.	Executive Summary	6-3b
2.	Descriptive narrative Building and site data Geologic hazards Structural evaluations Nonstructural evaluations	6-3c
3.	Appendices Prior evaluations Available drawings and other construction documents Geotechnical report Structural evaluation data Nonstructural evaluation data	6-3d

Table 6-2. Evaluation Report

(2) Geologic hazards. Summarize results of screening and evaluation of geological hazards. Discuss resolution of any identified hazards.

(3) Structural evaluations. Summarize the results of

(a) Preliminary structural assessment.

(b) Tier 1 structural screening.

(c) Tier 2 or Tier 3 structural evaluations.

(d) Final structural assessment.

1. Structural evaluation assessment.
2. Structural rehabilitation strategy.
3. Structural rehabilitation concept.

(4) Nonstructural evaluations. Summarize the results of:

(a) Preliminary nonstructural assessment.

(b) Nonstructural Tier 1 screening.

(c) Tier 2 nonstructural evaluation.

(d) Final nonstructural assessment.

1. Nonstructural evaluation assessment.
2. Nonstructural rehabilitation strategy.
3. Nonstructural rehabilitation concept.

d. *Appendices* to the evaluation report shall include:

(1) Copies of prior evaluations.

(2) Location and listing of available drawings and other construction documents.

(3) Geotechnical report regarding evaluation and mitigation of geologic hazards (if evaluation was found necessary).

(4) Structural evaluation data.

(a) Completed checklists for the Tier 1 evaluation.

(b) Supporting calculations and analytical data pertaining to a Tier 2 or Tier 3 evaluation.

(c) Supporting calculations and drawings for the preliminary rehabilitation concept.

(d) Back-up detail for the preliminary cost estimate.

(5) Nonstructural evaluation data.

(a) Completed checklists for the Tier 1 evaluation.

(b) Supporting calculations for the Tier 2 evaluation.

(c) Supporting conceptual drawings for the preliminary rehabilitation concept.

(d) Back-up detail for the preliminary cost estimate.

CHAPTER 7
REHABILITATION OF STRUCTURAL SYSTEMS

7-1. Introduction

a. Scope. This chapter describes the general procedures and the applicable criteria for the rehabilitation of structural systems as indicated in Table 7-1 and Figure 7-1. It is assumed that seismic deficiencies have been identified by the evaluation process described in Chapters 4 and 5, and that mitigation by structural rehabilitation is the authorized option. It should be noted that the acceptance criteria for rehabilitation are more restrictive than those specified in Chapter 4 and 5 for evaluation. While existing buildings that comply with the evaluation criteria are considered acceptable, buildings that are designated for rehabilitation shall comply with the more stringent criteria prescribed in this chapter. Although this chapter is limited to the rehabilitation of structural systems, the rehabilitation of nonstructural components would normally be accomplished concurrently. Rehabilitation techniques for structural systems are described in Chapter 8, and rehabilitation techniques and procedures for nonstructural components are described in Chapter 9.

b. The rehabilitation process is generally an iterative process, as indicated in Figure 7-1, because it is very difficult to anticipate the combined response of new or strengthened structural components interacting with an existing structural system. Although the desired response will eventually be obtained by trial and error, design experience and training in structural dynamics will reduce the number of iterations required to obtain an acceptable response.

7-2. General Rehabilitation Procedures

When rehabilitation is authorized to mitigate seismic deficiencies, the general procedures outlined in Table 7-1 and in the flow-chart in Figure 7-1 shall be followed. These procedures shall include:

a. Review of evaluation data. The designer shall review the Evaluation Report, the available construction documents, and the results of any prior evaluations.

b. Site visit. After reviewing the Evaluation Report and the available construction documents, the designer shall visit the building to:

(1) Visually confirm the results of the evaluation.

(2) Visualize the nature and extent of alterations required to implement the rehabilitation concept.

(3) Investigate the feasibility of alternative rehabilitation concepts.

(4) Make preliminary determination of required destructive and nondestructive testing.

c. Quality assurance /quality control. The quality assurance/quality control procedures outlined in Chapter 10, applicable to the rehabilitation design and preparation of construction documents, shall be implemented prior to initiation of the design. Any required engineering during construction (EDC) that will be performed by the structural designer shall be identified at the inception of the design work.

Step	Procedure K. Rehabilitation	References This Document	FEMA 273	TI 809-04
1.	Review Evaluation Report and other available data	7-2a		
2.	Site visit	7-2b		
3.	Supplementary analysis of existing building (if necessary)	7-2d		
4.	Rehabilitation concept selection	7-2e		
5.	Rehabilitation design a. Rehabilitation techniques (FEMA 172) b. Detailing requirements for new construction (FEMA 302)	7-2f Chaps. 8 and 9	Chap. 4-11	Chap. 7
6.	Confirming evaluation of rehabilitation a. Analytical procedures b. Acceptable criteria	7-2g	Secs. 2.9 & 3.3 Secs. 3.4 and Chap. 4-11	Chap. 5 Chap. 7
7.	Prepare construction documents			
8.	Quality assurance/quality control	Chap. 10		

Table 7-1. Rehabilitation Procedures

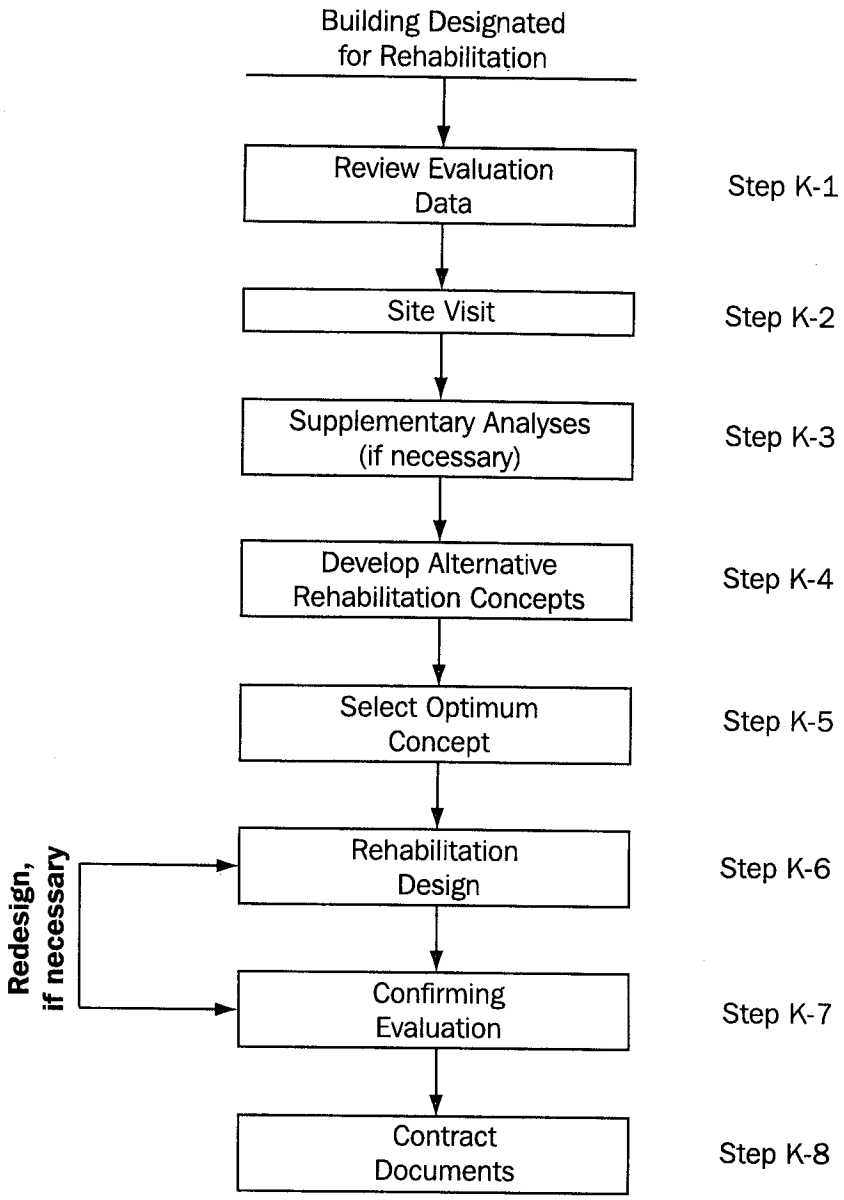

Figure 7-1. Rehabilitation Procedures

d. Supplementary analysis. The evolution of seismic provisions in building codes has been toward more severe and restrictive requirements, and very few of the older existing buildings can be expected to be in compliance with a rigorous evaluation. Based on the review of the evaluation documents, the designer may consider that the identified deficiencies were marginal, or that certain aspects of the evaluation were inconclusive or based on overly conservative assumptions, and that supplementary analyses should be performed to confirm or invalidate the evaluation. In such cases, approval should be requested to perform the supplementary analysis. If the evaluation was based on default structural material properties, and it was determined that the evaluation results were sensitive to these assumed properties, destructive or nondestructive testing shall be performed to establish properties that are more representative of the structural materials for the supplementary analysis.

e. Rehabilitation concept selection.

Paragraph 6-1a requires the development of a preliminary concept with a preliminary construction cost estimate in the preparation of the Evaluation Report. The purpose of the preliminary concept is to establish a reasonable cost basis for programming the rehabilitation. While a selected concept may be feasible in terms of engineering and construction, it may not be the most cost effective solution, and it may not address all of the functional or aesthetic restrictions of the installation authority (e.g., avoiding functional disruption of all or portions of the building during construction, or retaining historical or architectural features). When the rehabilitation is authorized, particularly if the seismic rehabilitation is triggered by other considerations (e.g., building expansion, handicap access, asbestos abeyance, etc.), the preliminary concept needs to be re-evaluated and coordinated with other structural alterations. Except for those buildings for which the strengthening or retrofit is a simple and obvious fix (e.g., inadequate bracing in a steel braced-frame structure mitigated by additional bracing, or strengthening or replacement of the existing bracing), at least three retrofit concepts should be developed within one or more retrofit strategies that address all of the above considerations. Representative rehabilitation techniques for structural systems are provided in Chapter 8. The optimum retrofit strategy will be the concept that provides the desired seismic performance (i.e., life safety or protection of an essential function); complies with the functional and/or aesthetic restrictions; and is the most cost-effective of the available retrofit strategies. The alternative concepts shall be compared and evaluated on the basis of construction cost, and the construction impacts on the functional occupants of the building. The designer shall select and recommend the optimum concept, with justification for the selection.

f. Rehabilitation design procedures.

(1) General. The design of the seismic rehabilitation consists of implementing the approved concept. For Seismic Group I buildings with only deficiencies that have been identified as requiring a "quick fix," the rehabilitation may consist of simply addressing the deficiency that would result in the building being "acceptable" by the deterministic evaluation criteria. In most cases governed by this document, however, rehabilitation will be an iterative process, as indicated in paragraph 7-1b, and analysis

will be required to confirm that, with the addition of the new or strengthened structural systems or components, the rehabilitated building meets the acceptance criteria prescribed in paragraph 7-2f(5)(d).

(2) Analytical Procedures. The analytical procedure for confirmation of the rehabilitation will generally be one of the following procedures that were used in the Tier 2 or Tier 3 evaluations:

(a) Linear Static Procedure (LSP) shall be performed in accordance with Section 3.3.1 of FEMA 273. Limitations on the use of the procedure shall be in accordance with paragraph 5-2b of TI 809-04.

(b) Linear Dynamic Procedure (LDP) shall be performed in accordance with Section 3.3.2 of FEMA 273.

(c) Nonlinear Static Procedure (NSP) shall be performed in accordance with Section 3.3.3 of FEMA 273. Guidelines on when a nonlinear procedure is required are provided in paragraph 5-4b of TI 809-04.

(d) Nonlinear Dynamic Procedure (NDP) as described in Section 3.3.4 of FEMA 273 is not recommended for use with buildings governed by this document.

For most military buildings, the LSP and LDP will provide the required analytical results.

(3) Mathematical model. A mathematical model shall be developed in accordance with Section 3.2.2 of FEMA 273. The model shall be consistent with the selected analytical procedure and shall be capable of providing the structural responses required by the acceptance criteria.

(4) Structural detailing requirements. The primary references for structural detailing of new construction associated with the rehabilitation of existing buildings are the applicable requirements of FEMA 302 and its incorporated reference documents (i.e., ACI, AISC, etc.). Additional guidance for the design and detailing of new structural components and systems is provided in Chapter 7 of TI 809-04.

(5) Rehabilitation design criteria.

(a) Design ground motion. The ground motion derived from 2/3 MCE is the basic ground motion in the FEMA 302 provisions; is approximately equivalent to that with a 10 percent probability of excedance in 50 years; and is the ground motion prescribed for all performance objectives by this document. It should be noted that, for the Life-Safety performance objective, FEMA 273 prescribes probabilistic ground motion with 10 percent probability of exceedance in 50 years with the Life-Safety acceptance criteria (m values) as well as compliance with the Collapse Prevention acceptance criteria for the MCE ground motion. This document has adopted the single-level criteria for the Life-Safety performance objective, as prescribed in FEMA 302 and TI 809-04 for new construction, and FEMA 310 for screening and evaluation of existing buildings. For many structural components, compliance with the Life-Safety acceptance criteria at 2/3 MCE will provide reasonable compliance with the Collapse Prevention criteria at the MCE level. This may not apply, however, to force-controlled components where the applied forces are not limited

by the yielding of the component or other connecting components (e.g., shear critical reinforced concrete beams or columns). The engineer responsible for the rehabilitation design shall evaluate the structural system to identify these vulnerable components, and shall strengthen them, as required, to comply with the exception in paragraph 7-2f(5)(d)1ii.

(b) Gravity load combinations shall be in accordance with Section 3.2.8 of FEMA 273, except that Equation 3-2 shall be replaced by the following:

$$Q_G = 1.2Q_D + 0.5Q_L + 0.2Q_S \qquad (7\text{-}1)$$

(c) Seismic forces shall be represented by the pseudo-lateral load defined by Equation 3-6 in FEMA 273.

(d) Seismic demands and capacities for structural components shall be as defined in the following subparagraphs. As indicated in paragraph 6-1a(2), a 10 to 15 percent reduction in the seismic demand of a deficient component is permitted in the structural evaluation if such reduction can preclude the rehabilitation of an otherwise deficient building. If, however, rehabilitation is found to be necessary, no reduction in the seismic demand is permitted.

1. Linear procedures.

i. Deformation-controlled actions. Deformation-controlled actions in primary and secondary components and elements shall satisfy Equation 7-2.

$$mQ_{CE} \geq Q_{UD} \qquad (7\text{-}2)$$

where:

m = Component or element demand modifier to account for expected ductility of the deformation associated with this action at the selected performance level. Chapter 7 of T1 809-04 provides tables of m values for various structural components. The tables are reproduced from FEMA 273, with the addition of values for the Safe Egress (SE) performance level.

Q_{CE} = Expected strength of the component or element at the deformation level under consideration for deformation-controlled actions.

Q_{UD} = Design action due to combined gravity loads and seismic loads as defined in Section 3.4.2.1A of FEMA 223.

For Q_{CE}, the expected strength shall be determined considering all coexisting actions acting on the component under the design loading condition. Procedures to determine the expected strength are given in Chapters 4 through 8 of FEMA 273. In the absence of prescribed values for Q_{CE}, the default value of 1.25 times the nominal strength (1.25 Q_{CN}) shall be assumed.

ii. Force-controlled actions. Force-controlled actions in primary and secondary components and elements shall satisfy Equation 7-3.

$$Q_{CN} \geq Q_{UF} \qquad (7\text{-}3)$$

where:

Q_{CN} = Nominal, or specified, strength of a component or element

Q_{UF} = Design actions due to combined gravity and seismic loads as defined by Section 3.4.2.1B of FEMA 273.

Exception:

The design action, Q_{UF}, for vulnerable components, as defined in paragraph 7-2f(5)(a), shall be defined by

$$Q_{UF} = Q_{G\pm} \frac{1.25Q_E}{C_1C_2C_3}$$

Equation 7-4.

(7-4)

Note that the lower bound strength, Q_{CL}, in FEMA 273, is defined here as the nominal or specified strength, Q_{CN}.

2. Nonlinear procedure.

i. General. This procedure shall be used for the evaluation of structures in Seismic Use Groups II and III, with the characteristics described in Paragraph 5-4b of TI 809-04. Acceptance criteria are also provided for this procedure to satisfy the Life-Safety performance objective, but the use of this procedure for that performance objective requires specific authorization.

ii. Actions and Deformations. With the procedures as described in Paragraph 5-4 of TI 809-04, compliance with the performance objective requires compliance with the global displacement criteria for the structure as a whole, and the local deformation criteria for individual structural elements.

- Global displacement. The displacement for the control node of the structure in the force/displacement plot (i.e., pushover analysis) must equal or exceed the target displacement, δt, described in Section 3.3.3 of FEMA 273.

- Deformation-controlled actions. Primary and secondary components shall have expected deformation capacities not less than the deformations derived from the pushover analysis when the target displacement, δt, is attained. Modeling parameters and numerical acceptance criteria are provided for each performance objective for the structural systems described in Chapters 7 through 10 of TI 809-04. The acceptance criteria are provided in terms of rotations, θ, in radians; rotation ratios, $\theta/\theta y$; or deformation ratios $\Delta/\Delta y$, as depicted in Figure 7-2.

- Force-controlled actions. Acceptance criteria for force-controlled actions shall be as prescribed for the linear procedures in paragraph 7-2f(5)(d)1.

3. The knowledge factor κ, in Equation 3-18 of FEMA 273 is assumed to be 1.0,

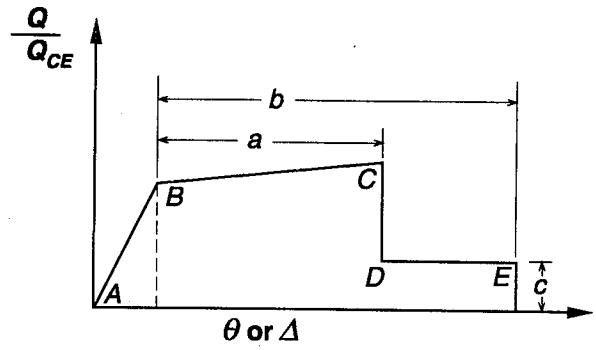

(a) Deformation

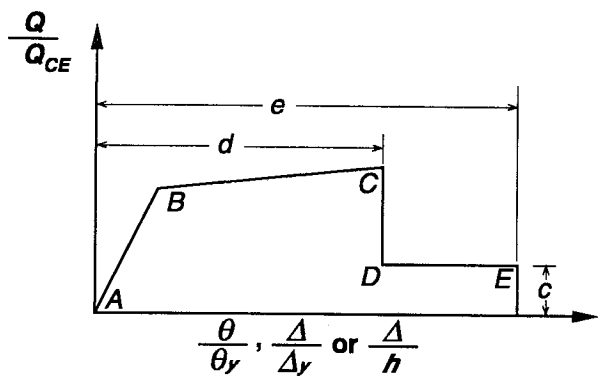

(b) Deformation ratio

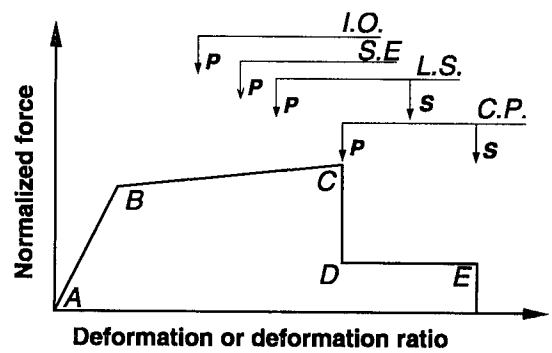

(c) Component or element deformation limits

Figure 7-2. Idealized Component Load Versus Deformation Curves for Depicting Component Modeling and Acceptability

based on the consideration that adequate construction documents and records are generally available for military buildings. However, a $\kappa = 0.75$ must be used to modify the capacity of existing structural components if adequate structural details and material property parameters required to perform the analyses cannot be determined from the available construction documents.

4. Allowable story drift. The component-based procedures prescribed by this document implicitly limit story drift by the limits on component deformation; however, global building drift needs to be monitored for P-Δ effects as prescribed in paragraph 5-1e, and the story drifts need to be monitored for some nonstructural components as prescribed by paragraph 5-3c.

g. Confirming evaluation. Structural rehabilitation will generally result in a change in the weight, stiffness and strength of the rehabilitated structural members, which with any added structural components and systems, will tend to modify the seismic response of the building, and the distribution of seismic forces within the building. If the rehabilitation measures are nominal (i.e., a "quick fix"), the modification of the seismic responses may be negligible, and no further evaluation is required. In most cases, it is advisable to perform a confirming evaluation to confirm that the rehabilitated structure complies with the acceptance criteria. New and strengthened existing components shall be modified as required to comply with the confirming evaluation. However, in recognition of the fact that the cost of rehabilitation is a step function, (i.e., a large incremental cost may be required for small incremental benefit), as indicated in paragraph 6-1a(2), a 10 to 15 percent reduction in the seismic demand on a previously acceptable existing component will be permitted if such reduction can preclude the need to strengthen or replace the component.

7-3. Preparation of Contract Documents

The preparation of construction drawings, specifications, and other contract documents for rehabilitation shall be in accordance with established proponent agency guidelines for the preparation of contract documents, and shall comply with the QA/QC procedures prescribed in paragraph 10-3. The contract documents shall also incorporate the construction QA/QC provisions indicated in paragraph 10-6.

CHAPTER 8
REHABILITATION TECHNIQUES FOR STRUCTURAL SYSTEMS

8-1. General

This chapter provides guidance for the selection of upgrading or rehabilitation techniques for the mitigation of identified deficiencies in structural systems. Guidance is also provided for innovative systems that may reduce or preclude the need to rehabilitate an existing deficient structural system.

a. Rehabilitation strategies. The rehabilitation techniques discussed in the following paragraphs are based on one or more of the following optional strategies:

(1) Strengthening or stiffening existing deficient structural components. Included in this category is the necessary strengthening or stiffening of connections to transfer forces to and from adjacent components. Also included are procedures that add ductility without significantly changing strength or stiffness.

(2) Replacing existing deficient components with stronger or stiffer components. The note in preceding paragraph regarding connecting elements also applies to this option.

(3) Providing supplementary structural systems or components. In some cases, the existing structural systems may be adequate for the gravity loads, but may not have adequate strength or stiffness for the required seismic loads (e.g., an older steel or concrete moment frame building). In these cases, a cost-effective retrofit may be to provide a new structural system designed to resist only the lateral loads (e.g., provide new exterior or interior shear walls in a moment frame building). If the new systems can be designed and constructed within the applicable functional and aesthetic restrictions, it may be more efficient, as well as more economical, than the labor-intensive strengthening of the existing frame systems. Selection of an appropriate new structural system must consider the deformation compatibility of the two systems for elastic and post-yield response. For example, new concrete shear walls are a common and effective rehabilitation technique for deficient low-rise moment frame buildings. The greater stiffness of the shear walls significantly reduces the seismic forces and deformations to be resisted by the frames, and a properly designed shear wall will have moderate post-yield capacity for energy dissipation without reliance on the ductility of the frame. New shear walls may not be appropriate for rehabilitating a high-rise (i.e., 10 stories or more) frame building. The cantilever deformation of the shear walls in the upper stories will usually exceed the predominantly shear deformation of the frames, and the total shear resisted by the frames in those stories may exceed the story shear. Similarly, a moment frame system is usually not appropriate to strengthen a deficient low-rise shear wall system.

(4) Modification of the building.

(a) Elimination of vertical or plan irregularities. This can be very effective in improving building response and reducing the probability of damage to peripheral components.

(b) Reduction of mass. This could be accomplished by the removal of one or more stories

to effect a reduction in the seismic responses of the remaining stories. If the building has water storage tanks or other heavy nonstructural items on the roof or in upper stories, relocation of these items to the grounds will also reduce the seismic response in the building.

(5) Protective systems.

(a) Base isolation. This reduces the response for some buildings by lengthening the fundamental period, and is most effective for stiff buildings on stiff soils.

(b) Energy dissipation. This reduces the response for some buildings by increased damping of the dynamic response, and is most effective for buildings with fundamental periods close to the natural site period.

b. Rehabilitation techniques. The following paragraphs provide discussion of alternative techniques for rehabilitation of primary structural components. Tables 8-1 through 8-5 illustrate the application of these techniques to representative structural systems. The rehabilitation techniques described in this chapter are representative of current practice in structural rehabilitation. The number of techniques described is by no means inclusive, or meant to be restrictive. Other techniques may be employed provided they possess the necessary strength, stiffness, and if required, energy dissipation capabilities to be compatible with those assumed in the analysis and design of the rehabilitation.

8-2. Rehabilitation Techniques for Structural Components

The rehabilitation techniques described in this paragraph will employ one or more of the first three rehabilitation strategies described in paragraph 8-1a. Modification of structural response with protective systems should be understood to be an option that, for some buildings, could reduce the response of deficient structural components to acceptable limits without rehabilitation, and should always be evaluated; particularly when it is important to avoid alteration of an existing structure, such as an historic building, or disruption of an important function in an essential building.

a. Shear walls. Shear walls are structural walls designed to resist lateral forces parallel to the plane of the wall. Shear walls may consist of cast-in-place reinforced concrete, masonry, precast concrete, and unreinforced masonry. Shear walls that are restrained within a moment frame are classified as in-filled walls, and are discussed in paragraph 8-2c. Shear walls in wood frame buildings and wall panels in light steel frame buildings are beyond the scope of this document.

(1) Cast-in-place reinforced concrete and masonry shear walls. Cavity walls in reinforced masonry are assumed to consist of the inner wythes as a shear wall and an outer wythe of veneer laterally supported by metal ties across the cavity. Strengthening options for reinforced concrete or masonry shear wall buildings are provided in Table 8-1.

(a) Deficiencies. The principal deficiencies of reinforced concrete or masonry shear walls are:

Table 8-1. Strengthening Options for Reinforced Concrete or Masonry Shear Wall Buildings

Structural Component	Deficiency	Strengthening Technique	Reference	Applicable Figure	
				This Document	FEMA 172
a. Shear walls	(1) Inadequate shear capacity	(a) Fill in openings	para 8-2a(1)(b)		3.2.1.2a 3.2.1.2b
		(b) Add reinforced concrete to interior or exterior face	para 8-2a(1)(b)	8-2	3.2.1.2c
		(c) Provide FRP overlay to interior or exterior face	para 8-2a(1)(b)	8-1	
		(d) Provide supplemental vertical resisting elements	para 8-2a(1)(b)		3.4 and 3.4.2
	(2) Inadequate flexural capacity	Same as above	para 8-2a(1)(c)	8-3	Same as above
b. Coupling beams	(1) Inadequate shear or flexural capacity	(a) Fill in openings	para 8-2a(1)(d)		3.2.1.2a 3.2.1.2b
		(b) Remove and Replace	para 8-2a(1)(d)		3.2.1.4
		(c) Accept rotational damage	para 8-2a(1)(d)		
c. Concrete floor or roof diaphragms	(1) Inadequate shear capacity	(a) Overlay with reinforced concrete	para 8-2f(1)(b)		3.5.2.2
	(2) Inadequate chord capacity	(a) Add new concrete or steel chord	para 8-2f(1)(d)		3.5.2.3 3.5.4.3
	(3) Shear or tensile stresses at openings	(a) Add structural member below the slab	para 8-2f(1)(d)		3.5.2.4a
		(b) Add concrete topping with trim bars	para 8-2f(1)(e)		3.5.2.4b
		(c) Fill in opening	para 8-2f(1)(e)		3.2.1.2b
	(4) Inadequate wall anchorage	(a) Add new concrete or steel doweled into wall	para 8-3a(1)(c)		3.5.2.3 3.5.4.3

Sheet 1 of 2

Table 8-1. Strengthening Options for Reinforced Concrete or Masonry Shear Wall Buildings

Structural Component	Deficiency	Strengthening Technique	Reference	Applicable Figure	
				This Document	FEMA 172
d. Steel deck floor or roof diaphragm	(1) Inadequate shear capacity	(a) Additional welding	para 8-2f(4)(b)		
		(b) Add concrete fill or overlay	para 8-2f(4)(b)		3.5.5.2a
		(c) Provide horizontal bracing system	para 8-2f(4)(b)		3.5.5.2b
	(2) Inadequate shear transfer	(a) Add steel member between joists	para 8-2f(4)(b)	8-12	
		(b) Add additional bolts to wall	para 8-3a(4)(b)	8-18	
	(3) Inadequate wall anchorage	(a) Add through bolts to wall	para 8-3a(4)(b)	8-18	
		(b) Add welded straps to decking	para 8-3a(5)(b)		
e. Precast concrete diaphragms	(1) Inadequate shear capacity of connections	(a) Add reinforced concrete overlay	para 8-2f(3)(b)		3.5.4.2
	(2) Inadequate chord capacity	(a) Add continuous steel or concrete member above or below slab	para 8-2f(3)(c)		3.5.4.3
	(3) Excessive shear or tensile stress at openings	(a) Add structural members below the slab	para 8-2f(1)(d)		3.5.2.4a
		(b) Add concrete topping with trim bars	para 8-2f(1)(e)		3.5.2.4b
		(c) Fill-in opening	para 8-2f(1)(e)		3.2.1.2b
	(4) Inadequate wall anchorage	(a) Add reinforced concrete overlay	para 8-2f(3)(b)		3.5.4.2
f. Continuous footings	(1) Excessive soil bearing pressure	(a) Add drilled piers	para 8-2g(1)(b)		3.6.1.2b
		(b) Modify soil properties	para 8-2g(1)(b)		
		(c) Underpin existing footing	para 8-2g(1)(b)		3.6.1.2a
	(2) Excessive uplift forces	(a) Add drilled piers	para 8-2g(1)(c)		3.6.1.2b

Sheet 2 of 2

- Inadequate shear capacity (shear or shear-compression at the toe of the wall);

- Inadequate flexural capacity;

- Inadequate shear or flexural capacity in the coupling beams between shear walls or piers;

- Vertical discontinuities; and

- Inadequate development lengths for reinforcement at splices or dowels.

(b) Strengthening techniques for shear capacity. Deficient shear capacity of existing concrete or reinforced masonry shear walls can be improved by:

- Increasing the effectiveness of the existing walls by filling in door or window openings with reinforced concrete or masonry (FEMA 172, Figures 3.2.1.2 a and 3.2.1.2 b).

- Providing a fiber-reinforced polymer (FRP) overlay on one or both sides of the existing shear wall (Figure 8-1).

- Providing additional thickness to the existing walls with a cast-in-place or pneumatically applied (i.e., shotcrete) reinforced concrete overlay anchored to the inside or outside face of the existing walls (Figure 8-2 and FEMA 172, Figure 3.2.1.2 c).

- Reducing the shear or flexural stresses in the existing walls by providing supplemental vertical-resisting components (i.e., shear walls, bracing, or external buttresses).

The first three techniques discussed above will generally be more economical than the fourth, particularly if they can be accomplished without increasing existing foundations. If adequate additional capacity can be obtained by filling in selected window or door openings without impairing the functional or aesthetic aspects of the building, this alternative will probably be the most economical. The infill should be selected to match the shear modulus of the wall within reasonable limits (i.e., brick or CMU infill should be used in brick or CMU walls). If this is not feasible, the second or third technique should be considered. The optimum application of these alternatives would be when adequate additional capacity could be obtained by an overlay on a selected portion of the outside face of the perimeter walls without unduly impairing the functional or aesthetic qualities of the building, and without the need to increase the footings. In some cases, restrictions may preclude any change in the exterior appearance of the building (i.e., a building with historical significance). In these cases, it will be necessary to consider overlays to the inside face of the exterior shear walls or to either face of interior shear walls. Obviously this is more disruptive, and thus more costly, than restricting the work to the exterior of the building; however, if the functional activities within the building are to be temporarily relocated because of other interior alterations, the cost difference between the overlay to the inside face and the outside face of the building walls is reduced. In some cases, for example, when deficiencies exist

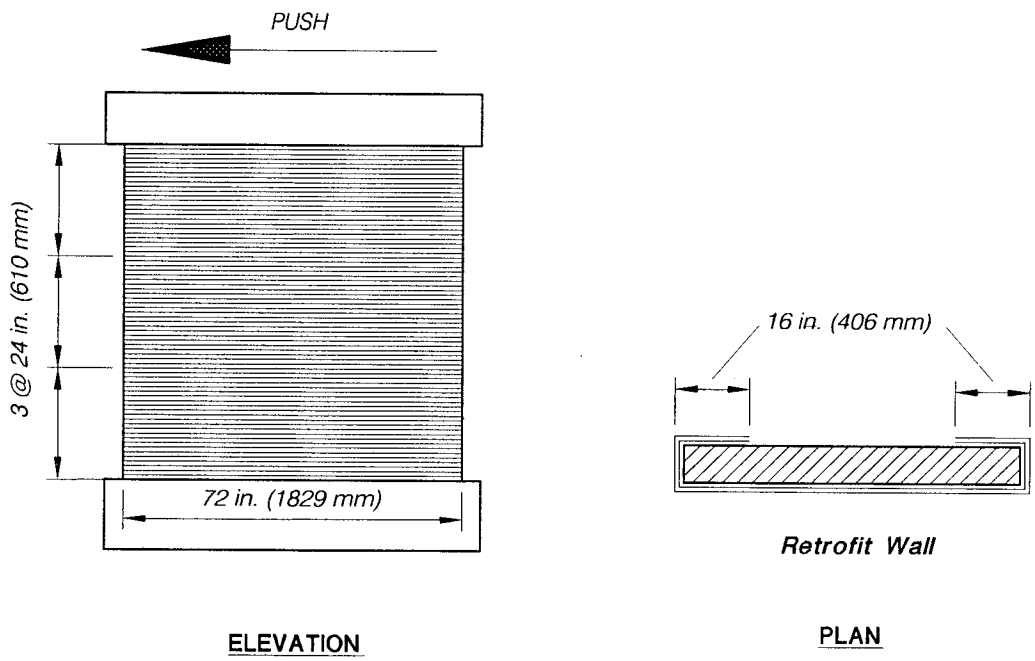

Figure 8-1. Carbon Fiber Overlay to Enhance Shear Capacity of Masonry Wall

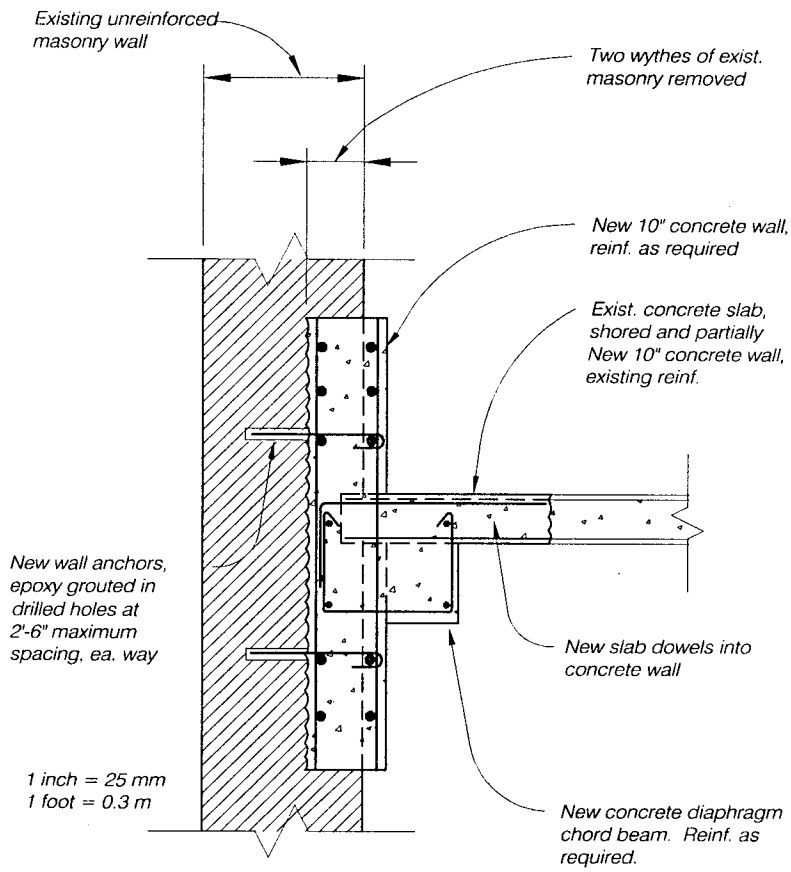

1 inch = 25 mm

1 foot = 0.3 m

Figure 8-2. Strengthening of an Unreinforced Masonry Wall

in the capacity of the diaphragm chords or in the shear transfer from the diaphragm to the shear walls, there may be compelling reasons to place the overlay on the inside face and concurrently solve other problems. FRP overlays with either fiberglass or carbon fibers are a comparatively recent procedure, and the application technique and structural preparation depend on the composition of the overlay. Technical data are available from the FRP manufacturers, and consensus guidelines are being developed by CERL and ACI. Figure 8-1 depicts a test specimen of a masonry shear wall with an FRP overlay. When overlays are applied to an existing brick masonry or CMU wall, the masonry in that wall shall be ignored in the distribution of shears by relative rigidities. If the overlay is not applied to all wall panels in the same line of force, only the masonry in the overlay panel shall be ignored. Providing supplemental vertical-resisting components usually involves construction of additional interior shear walls or exterior buttresses. This alternative is generally more expensive than the other two, because of the need for new foundations and for new drag struts or otherconnections to collect the diaphragm shears for transfer to the new shear walls or buttresses. The foundations required to resist overturning forces for an exterior buttress are significant because the dead weight of the building cannot be mobilized to resist the uplift forces on the outer column. Piles or drilled piers may be required to provide tensile hold-down capacity for the footings. Buttresses located on both ends of the wall can be designed to take compression only, minimizing the foundation problems. Buttresses frequently are not feasible due to adjacent buildings or property lines. The advantage of the buttress over a new interior shear wall is that the work can be accomplished with minimal interference to ongoing building functions.

(c) Strengthening techniques for flexural capacity. Deficient flexural capacity of existing reinforced concrete or masonry shear walls can be improved using the same techniques identified to improve shear capacity, ensuring that flexural steel has adequate connection capacity into existing walls and foundations. Shear walls that yield in flexure are more ductile than those that yield in shear. Shear walls that are heavily reinforced (i.e., with a reinforcement ratio greater than about 0.005) are also more susceptible to brittle failure; therefore, care must be taken not to overdesign the flexural capacity of rehabilitated shear walls. FRP overlays are not generally effective to enhance flexural capacity because of the difficulty associated with development of the tensile capacity of the overlay at the bottom or top of the wall. Figure 8-3 depicts two test specimens of flexural masonry walls overlaid with FRP sheets. FRP overlays have also been successfully used to provide confinement that reduces the necessary development length of reinforcement, and also enhances the ductility of a flexure-controlled wall by permitting greater inelastic compressive strains in the concrete.

(d) Strengthening techniques for coupling beams. Deficient shear or flexural capacity in coupling beams of reinforced concrete or reinforced masonry shear wall can be improved by:

- Improving the ductility of the coupling beams with FRP overlays;
- Eliminating the coupling beams by filling in openings with reinforced concrete or masonry;

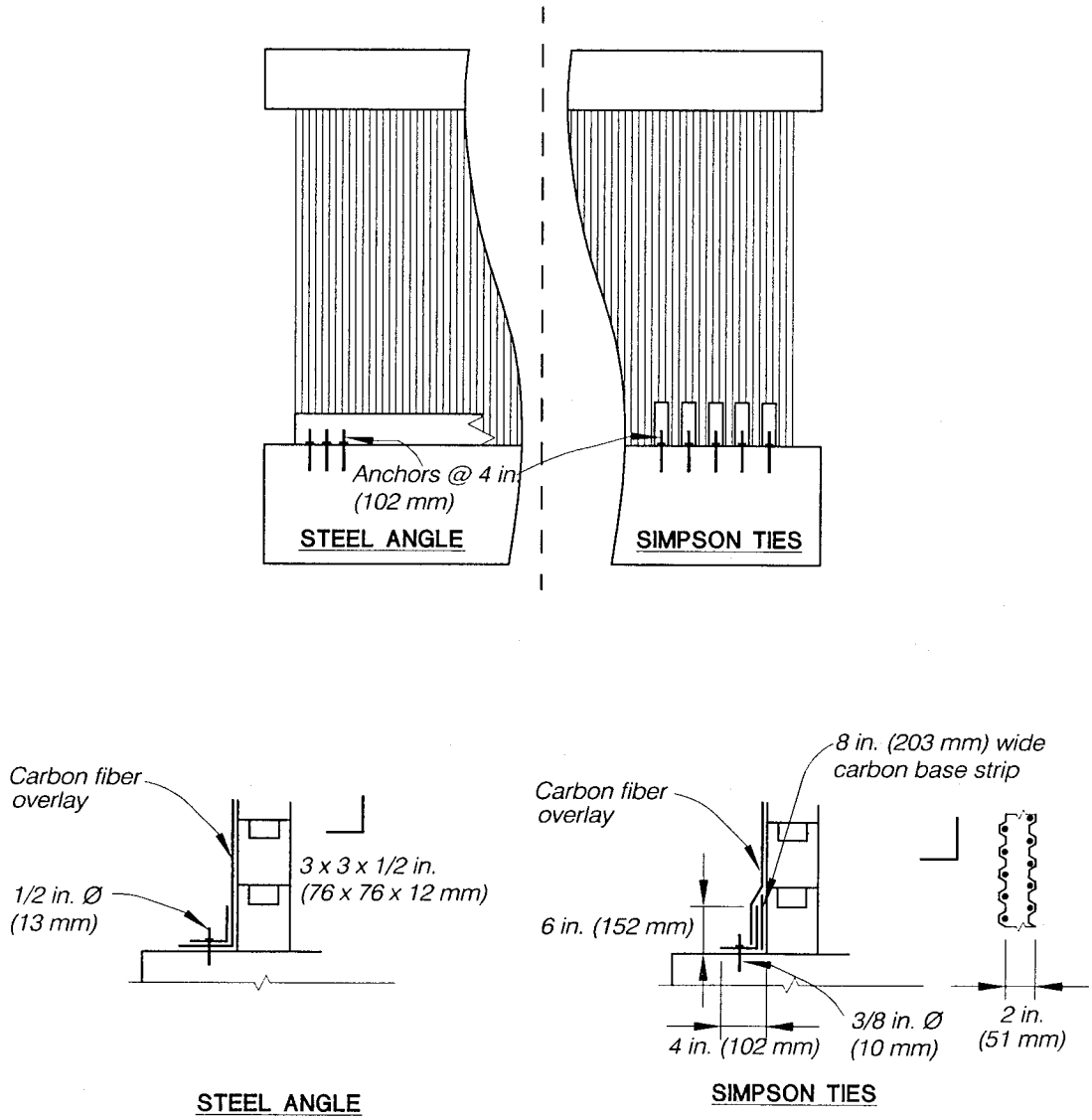

Figure 8-3. Carbon Fiber Overlay to Enhance Flexural Capacity of Masonry Wall

- Removing the existing beams and replacing with new, properly reinforced beams (FEMA 172, Figure 3.2.1.4); and

- Reducing the shear or flexural stresses in the connecting beams by providing additional vertical-resisting components (i.e., shear walls, bracing, or external buttresses).

If the deficiency is in both the piers and the connecting beams, the most economical solution is likely to be adding reinforced concrete on one or both sides of the existing wall and replacing the beams with properly reinforced concrete. The new concrete may be formed and poured in place or may be placed by the pneumatic method. If the identified deficiency exists only in the flexural capacity of the connecting beams, consideration should be given to improving the ductility of the coupling beams with FRP overlays or the acceptance of some minor damage in the form of cracking or spalling by repeating the structural evaluation with the deficient beams modeled as pin-ended links between the piers. If this condition is unacceptable, the second technique may be the most economical, and the beams should be removed and replaced with properly designed reinforced concrete. Depending on functional and architectural, as well as structural considerations, filling in selected openings may be practical. If the first two techniques are not feasible or adequate to ensure the proper performance of the wall, the third technique, reducing the stress by adding supplemental new structural components, should be considered. This alternative is likely to be the most costly because of the need for new foundations, vertical members, and collectors.

(e) Strengthening techniques for vertical discontinuities. Discontinuous shear walls (i.e., shear walls that do not extend to the foundation) are often supported in a lower story by concrete columns or piers. These supporting structural components are vulnerable to possible overstrength in the supported shear walls, particularly from the overturning forces due to lateral loads. For Seismic Use Group I buildings, these components shall be analyzed and strengthened or replaced, if necessary, in accordance with the provisions of the 9.6.2 of FEMA 302 using the special load combinations (and with the Ω_o overstrength factor). For buildings with enhanced performance objectives, the supporting columns or piers shall be considered to be force-controlled components in accordance with paragraph 7-2f(5).

(2) Precast concrete shear walls.

(a) Deficiencies. The principal deficiencies of precast shear walls are:

- Inadequate shear or flexural capacity in the wall panels;

- Inadequate interpanel shear or flexural capacity;

- Inadequate out-of-plane flexural capacity; and

- Inadequate shear or flexural capacity in coupling beams.

(b) Strengthening techniques for inadequate shear or tensile capacity. Deficient in-plane shear or flexural capacity of precast concrete panel walls can be improved by:

- Increasing the shear capacity of walls with significant openings for doors or windows by infilling the existing openings with reinforced concrete;

- Increasing the shear or flexural capacity by adding reinforced concrete (cast-in-place or shotcrete) at the inside or outside face of the existing walls;

- Providing a fiber-reinforced polymer (FRP) overlay on one or both sides of the existing shear wall;

- Increasing the flexural capacity by positive interpanel connections for vertical shear; and

- Adding interior shear walls to reduce the flexural or shear stress in the existing precast panels.

Precast concrete shear walls generally only have high in-plane shear stress when there are large openings in the wall, and the entire shear force tributary to the wall is carried by a few panels. The most cost-effective solution generally is to infill some of the openings with reinforced concrete. In the case of inadequate interpanel shear capacity, the panels will act independently and can have inadequate flexural capacity. Improving the vertical shear capacity of the connection between panels can improve the overall wall flexural capacity. The last two techniques are generally not cost effective unless a significant overstress condition exists.

(c) Strengthening techniques for inadequate interpanel capacity. Deficient interpanel shear connection capacity of precast concrete wall panels can be improved by:

- Making each panel act as a cantilever to resist in-plane forces (this may be accomplished by adding or strengthening tie-downs, edge reinforcement, footings, etc.); and

- Providing a continuous wall by exposing the reinforcing steel in the edges of adjacent units, adding ties, and repairing with concrete.

The two techniques can be equally effective. The installation of tie-downs and possibly surface-mounted wall reinforcement that will make each panel act as a cantilever is a cost-effective way to compensate for inadequate interpanel capacity, where panels have adequate flexural capacity, and operational and aesthetic requirements for the space can accommodate such installation. Where this is not acceptable, creating a continuous wall by exposing horizontal reinforcing steel and weld-splicing them across panel joints is a viable, although more costly, option. A commonly used technique to increase interpanel capacity is to bolt steel plates across panel joints; however, observations of earthquake damage indicate this technique may not perform acceptably due to insufficient ductility, and its use is not recommended in regions with $S_{DS} \geq 0.25$.

(d) Strengthening techniques for inadequate out-of-plane flexural capacity. Deficient out-of-plane flexural capacity of precast concrete shear walls can be remediated by:

- Providing pilasters at and/or in-between the interpanel joints;

- Providing FRP overlay on both sides of walls; and

- Adding horizontal beams between the columns or pilasters at mid-height of the wall.

The reinforcing in some precast concrete wall panels may have been placed to handle lifting stresses without concern for seismic out-of-plane flexural stresses. A single layer of reinforcing steel, for example, may be placed adjacent to one face of the wall. If this condition exists, new and/or additional pilasters can be provided between the diaphragm and the foundation at a spacing such that the wall will adequately span horizontally between pilasters. FRP overlays on both sides of a precast concrete wall can also significantly enhance the out-of-plane flexural capacity of the wall. In addition, horizontal beams can be provided between the pilasters at a vertical spacing such that the wall spans vertically between the diaphragm and the horizontal beam, or between the horizontal beam and the foundation.

(e) Strengthening techniques for inadequate shear or flexural capacity in coupling beams. Deficient shear or flexural capacity in coupling beams in precast concrete walls can be improved using the techniques identified for correcting the same condition in concrete shear walls. The relative merits of the alternatives for improving the shear or flexural capacity of connecting beams in precast concrete coupling beams are similar to those discussed for concrete shear walls.

(3) Unreinforced masonry shear walls. Masonry walls include those constructed of solid or hollow units of brick or concrete. Hollow clay tile is also typically classified as masonry. The use of hollow tile generally has been limited to nonstructural partitions, and is discussed in Chapter 9. Strengthening options for unreinforced concrete or masonry buildings are provided in Table 8-2.

(a) Deficiencies. The principal deficiencies of unreinforced masonry shear walls are:

- Inadequate in-plane shear or flexural capacity;

- Inadequate out-of plane flexural capacity of the walls; and

- Inadequate out-of-plane anchorage.

A secondary deficiency is inadequate shear or flexural capacity of the coupling beams.

(b) Strengthening techniques for inadequate in-plane shear and out-of-plane flexural capacity. Deficient in-plane shear or flexural capacity and out-of-plane flexural capacity of unreinforced masonry walls can be improved by:

- Providing additional shear capacity by placing reinforcing steel on the

Table 8-2. Strengthening Options for Unreinforced Concrete or Masonry Buildings

Structural Element	Deficiency	Strengthening Technique	Reference	Applicable Figure	
				This Document	FEMA 172
a. Shear walls	(1) Inadequate shear or flexural capacity	(a) Fill-in openings	para 8-2a(1)(b)		3.2.1.2a 3.2.1.2b
		(b) Add reinforced concrete to interior or exterior face	para 8-2a(1)(b)	8-2	3.2.1.2c
		(c) Provide FRP overlay to interior or exterior face	para 8-2a(1)(b)	8-1	
		(d) Center coring technique	para 8-2a(3)(b)		3.2.3.2
		(e) Provide supplementary vertical resisting elements	para 8-2a(1)(b)		3.4 and 3.4.2
b. Coupling beams	(1) Inadequate shear or flexural capacity	(a) Fill-in openings	para 8-2a(1)(d)		3.2.1.2a
		(b) Remove and replace	para 8-2a(1)(d)		3.2.1.4
		(c) Accept rotational damage	para 8-2a(1)(d)		
c. Concrete floor or roof diaphragms	(1) Inadequate shear capacity	(a) Overlay with reinforced concrete	para 8-2f(1)(b)		3.5.2.2
	(2) Inadequate chord capacity	(a) Add new concrete or steel chord	para 8-3a(1)(c)		3.5.2.3 3.5.4.3
	(3) Shear or tensile stresses at openings	(a) Add structural member below the slab	para 8-2f(1)(d)		3.5.2.4a
		(b) Add concrete topping with trim bars	para 8-2f(1)(e)		3.5.2.4b
		(c) Fill-in opening	para 8-2f(1)(e)		3.2.1.2b
	(4) Inadequate wall anchorage	(a) Provide reinforced concrete overlay with dowels	para 8-2f(1)(e)		3.5.2.2

Sheet 1 of 2

Table 8-2. Strengthening Options for Unreinforced Concrete or Masonry Buildings

Structural Element	Deficiency	Strengthening Technique	Reference	Applicable Figure	
				This Document	FEMA 172
		(b Provide new steel member with bolting to wall	para 8-2f(1)(e)		3.5.4.3
d. Timber floor or roof diaphragms	(1) Inadequate shear capacity	(a) Provide additional fasteners	para 8-2f(5)(b)		
		(b) Provide plywood overlay	para 8-2f(5)(b)	8-14	
	(2) Inadequate chord capacity	(a) Provide continuity splice for joists or fascia	para 8-2f(5)(c)	8-15	
		(b) Provide continuous steel member	para 8-2f(5)(c)	8-16	
	(3) Shear or tensile stresses or openings	(a) Provide new drag struts	para 8-2f(5)(d)		2.2.2.4b
		(b) Provide new plywood overlay with appropriate nailing	para 8-2f(5)(d)	8-14	
	(4) Inadequate stiffness	(a) Provide plywood overlay	para 8-2f(5)(b)	8-14	
		(b) Provide "cross" walls	para 8-2a(3)(d)		
e. Continuous footings	(1) Excessive soil bearing pressures	(a) Add drilled piers	para 8-2g(1)(b)		3.6.1.2b
		(b) Modify soil properties	para 8-2g(1)(b)		
		(c) Underpin existing footing	para 8-2g(1)(b)		3.6.1.2a
	(2) Excessive uplift forces	(a) Add drilled piers	para 8-2g(1)(c)		3.6.1.2b

inside or outside face of the wall and applying new reinforced concrete overlay (Figure 8-2);

- Providing a fiber-reinforced polymer (FRP) overlay on one or both sides of the existing shear wall (Figure 8-1);

- Providing additional capacity only for out-of-plane lateral forces by adding reinforcing steel to the wall utilizing the center coring technique (FEMA 172, Figure 3.2.3.2);

- Providing additional capacity for out-of-plane lateral forces by adding thin surface treatments (e.g., plaster with wire mesh and Portland cement mortar) at the inside and outside face of existing walls;

- Filling in existing window or door openings with unreinforced concrete or masonry; and

- Providing additional shear walls or a steel bracing system at the interior or perimeter of the building, or providing external buttresses (FEMA 172, Figure 3.1.2.2 c).

Strengthening techniques for inadequate in-plane shear capacity are similar to those discussed above for reinforced concrete or masonry walls, but there is an important difference because of the very low allowable stresses normally permitted for unreinforced masonry. Inadequate in-plane flexural capacity frequently occurs in slender URM piers between window openings when the pier flexural strength is attained prior to the shear strength. Because non-reinforced masonry has minimal tensile strength, URM walls are also very susceptible to flexural failure caused by out-of-plane forces. A common strengthening technique for this deficiency is to construct reinforced concrete pilasters or steel columns anchored to the masonry wall and spanning between the floor diaphragms. The spacing of the pilasters or columns is such that the masonry wall can resist the seismic inertia forces by spanning as a horizontal beam between the pilasters or columns. FRP overlays on both sides of a precast concrete wall can also significantly enhance the out-of-plane flexural capacity of the wall. A recent innovation that has been used on several California projects is the seismic strengthening of unreinforced masonry walls by the center coring technique. This technique consists of removing 4-inch (102 mm) -diameter (+/-) vertical cores from the center of the wall at regular intervals (about 3 to 5 feet [0.90 to 1.53 m]apart) and placing reinforced steel and grout in the cored holes. Polymer cement grout has been used because of its workability, low shrinkage, and penetrating characteristics. The reinforcement has been used with and without post-tensioning. This technique provides a reinforced vertical beam to resist flexural stresses, and the infusion of the polymer grout strengthens the mortar joint in the existing masonry, particularly in the vertical collar joints that generally have been found to be inadequate. This method is a developing technology, and designers contemplating its use should obtain the most current information on materials and installation techniques. The third technique for strengthening out-of-plane capacity of existing walls is to apply thin surface treatments of plaster or Portland cement over welded wire mesh. These treatments should be applied on both faces of

existing walls. Filling in existing window and/or door openings can be a cost-effective means of increasing in-plane shear capacity if the architectural and functional aspects of the building can be accommodated. To maintain strain compatibility around the perimeter of the opening, it is desirable that the infill material has physical properties similar to those of the masonry wall.

1. Strain compatibility. Research indicates that it is difficult to maintain strain compatibility between uncracked masonry and cracked reinforced concrete. As a result, when there is a significant deficiency in the in-plane shear capacity of unreinforced masonry walls, some structural engineers prefer to ignore the participation of the existing masonry; to provide out-of-plane support for the masonry; and to design the concrete overlay to resist the total in-plane shear in the overlay panel.

2. Redistribution. New reinforced concrete shear walls may be provided in an existing building to reduce the in-plane shear stresses in the unreinforced masonry walls by redistributing the seismic forces by relative rigidities. It should be noted that this redistribution is most effective when the walls are in the same line of force, and connected by a competent spandrel beam or drag strut. When the new concrete walls are not in the same line of force, and when the diaphragm is relatively flexible with respect to the wall, the redistribution may be by tributary area rather than by relative rigidity, and the benefit of the additional shear wall may not be entirely realized.

(c) Strengthening techniques for inadequate out-of-plane anchorage. Deficient out-of-plane anchorage can be improved only by providing proper anchorage to the floor and roof diaphragms. Proper anchorage details are discussed in paragraph 8-3a(1) and 8-3a(7) for concrete and wood diaphragms.

(d) Special Procedure for unreinforced masonry bearing wall buildings. An alternative methodology has been developed for the evaluation and design of unreinforced masonry bearing wall buildings with flexible wood diaphragms. Initially designated as the "ABK Methodology," it is based on research funded by the National Science Foundation and performed by Agbabian Associates, S. B. Barnes and Associates, and Kariotis and Associates. The procedure for evaluation of unreinforced masonry (URM) bearing wall buildings presented in Section 4.2.6 of FEMA 310 is based on this methodology. Some of the principal differences between this methodology and conventional code provisions are as follows:

- The in-plane masonry walls are assumed to be rigid (i.e., there is no dynamic amplification of the ground motion in walls above ground level);

- The diaphragms and the tributary masses of the out-of-plane walls respond to ground motion through their attachments to the in-plane walls;

- The maximum seismic force transmitted to the in-plane walls by the diaphragm is limited by the shear strength of the diaphragms;

- The diaphragm response is controlled within prescribed limits by cross walls (i.e., existing or new wood sheathed stud walls) or shear walls; and .

- Maximum height-to-thickness (h/t) ratios are specified in lieu of flexural calculations for out-of-plane response of the walls.

This Special Procedure is permitted only for buildings in Seismic Use Group I.

b. Moment frames. Moment-resisting systems are vertical components that resist lateral loads primarily through flexure. There are three principal types of moment-resisting systems: steel moment frames, concrete moment frames, and precast concrete moment frames. All of these frames may occur with reinforced or unreinforced concrete or masonry walls.

(1) Steel moment frames. Strengthening options for steel moment-resisting frame buildings are provided in Table 8-3.

(a) Deficiencies. The principal seismic deficiencies in steel moment frames are:

1. Beams
- Inadequate moment capacity.
- Inadequate stiffness (drift).

2. Columns
- Inadequate moment capacity.
- Inadequate stiffness (drift).
- Inadequate tensile capacity at splices.
- Inadequate anchorage at foundation.

3. Beam/column joint
- Inadequate rotation capacity (ductility).
- Inadequate vertical shear capacity.
- Inadequate panel joint shear capacity.

(b) Strengthening techniques for inadequate moment/shear capacity of beams or columns. Deficient moment/shear capacity of the beams or columns can be improved by:

- Increasing the moment capacity of the beams by adding cover plates or other steel sections to the flanges (FEMA 172, Figure 3.1.1.2 c);

- Reducing the stresses in the existing frames by providing supplemental vertical-resisting elements (i.e., additional moment frames, braces, or shear walls); and

- Providing lateral bracing of unsupported flanges to increase capacity limited by tendency for lateral/torsional buckling.

If the existing steel frame members are inaccessible (e.g., they are covered with architectural cladding), the first two techniques usually are not cost-effective.

Table 8-3. Strengthening Options for Steel Moment-Resisting Frame Buildings

Structural Component	Deficiency	Strengthening Technique	Reference	Applicable Figure	
				This Document	FEMA 172
a. Columns and beams	(1) Inadequate moment capacity	(a) Add cover plates to flanges	para 8-2b(1)(b)		3.1.1.2c
		(b) Provide lateral bracing of unsupported flanges	para 8-2b(1)(b)		
		(c) Provide supplemental vertical-resisting elements	para 8-2b(1)(b)		3.4 and 3.4.2
	(2) Inadequate axial load capacity	(a) Box column flanges	para 8-2b(1)(b)		3.1.1.2b
	(3) Inadequate stiffness	(a) Provide boxing or cover plates	para 8-2b(1)(e)		3.1.1.2b 3.1.1.2c
		(b) Provide haunches to beams	para 8-2b(1)(e) and 8-2b(1)(c)		
		(c) Encase columns in concrete	para 8-2b(1)(e)		
		(d) Provide supplemental vertical-resisting elements	para 8-2b(1)(e)		
	(4) Inadequate column splice capacity	(a) Provide additional splice plates and welding	para 8-2c(3)(b)	8-9	
b. Beam/column joints	(1) Inadequate moment capacity	(a) Add cover plates to beam flanges	para 8-2b(1)(c)		3.1.1.2a
		(b) Provide haunches to lower beam flanges	para 8-2b(1)(c)	8-4 and 8-5	
		(c) Add ribs to beam flanges	para 8-2b(1)(c)	8-6	
		(d) Provide supplemental vertical-resisting elements	para 8-2b(1)(b)		
	(2) Inadequate shear capacity	(a) Provide additional welding to shear connection	para 8-2b(1)(b)	8-4 and 8-8	

Sheet 1 of 3

Table 8-3. Strengthening Options for Steel Moment-Resisting Frame Buildings

Structural Component	Deficiency	Strengthening Technique	Reference	Applicable Figure This Document	Applicable Figure FEMA 172
	(3) Inadequate panel zone capacity	(a) Provide web doubler plate	para 8-2b(1)(d)		
		(b) Provide stiffener or continuity plates	para 8-2b(1)(d)	8-4 and 8-5	
c. Concrete floor and roof diaphragms	(1) Inadequate shear capacity	(a) Overlay with reinforced concrete	para 8-2f(1)(b)		3.5.2.2
	(2) Inadequate chord capacity	(a) Provide continuity in existing beams	para 8-2f(4)(c)	8-8	
	(3) Shear or tensile stresses at openings	(a) Add structural member below the slab	para 8-2f(1)(e)		3.5.2.4a
		(b) Add concrete topping with trim bars	para 8-2f(1)(e)		3.5.2.4b
		(c) Fill-in opening	para 8-2f(1)(e)		3.2.1.2b
d. Steel deck floor and roof diaphragms	(1) Inadequate shear capacity	(a) Additional welding	para 8-2f(4)(b)		
		(b) Add concrete fill or overlay	para 8-2f(4)(b)		3.5.5.2a
		(c) Provide horizontal bracing	para 8-2f(4)(b)		
	(2) Inadequate shear transfer	(a) Add steel member between joists	para 8-2f(4)(b)	8-12	
	(3) Inadequate chord capacity	(a) Provide continuity in existing beams	para 8-2f(4)(c)	8-8	
e. Spread footings	(1) Excessive soil bearing pressure	(a) Underpin footing	para 8-2g(2)(b)		3.6.1.2a
		(b) Add new piers drilled through footing	para 8-2g(2)(b)	8-17	
		(c) Modify existing soil	para 8-2g(2)(b)		
		(d) Provide tie beams	para 8-2g(2)(b)		

Sheet 2 of 3

Table 8-3. Strengthening Options for Steel Moment-Resisting Frame Buildings

Structural Component	Deficiency	Strengthening Technique	Reference	Applicable Figure This Document	Applicable Figure FEMA 172
	(2) Excessive uplift forces	(a) Add new piers drilled through footing	para 8-2g(2)(b)	8-17	
		(b) Provide tie beams	para 8-2g(2)(b)		
	(3) Inadequate passive pressure	(a) Enlarge footing	para 8-2g(2)(b)		
		(b) Modify existing soil	para 8-2g(2)(b)		
		(b) Provide tie beams	para 8-2g(2)(b)		
f. Pile or drilled pier foundations	(1) Inadequate tensile or compression capacity	(a) Drive additional piles, remove and replace pile cap	para 8-2g(3)(b)		3.6.3.2
		(b) Provide tie beams	para 8-2g(2)(b)		
	(2) Inadequate lateral load capacity	(a) Modify existing soil	para 8-2g(2)(b)		
		(b) Provide tie beams	para 8-2g(2)(b)		
		(c) Drive additional piles, remove and replace pile cap	para 8-2g(3)(b)		3.6.3.2

The majority of the columns, beams, and connections would need to be exposed; significant reinforcement of the connections and members would be required, and the architectural cladding would have to be repaired. Reducing the excessive stresses by providing supplemental resisting elements usually will be the most cost-effective approach. Providing additional moment frames (e.g., in a building with moment frames only at the perimeter, selected interior frames can be modified to become moment frames, as indicated in Figure 3.1.1.2a of FEMA 172) reduces the stresses on the existing moment frames. Providing supplemental bracing or shear walls also can reduce frame stresses. Concentric bracing in a moment frame system with a rigid diaphragm will attract lateral shear forces from the moment frames because of its greater relative rigidity. Shear walls have the additional disadvantage of requiring additions to or modifications of the existing foundations. The addition of eccentric bracing may be an efficient and cost-effective technique to increase the lateral-load capacity of the deficient frame, provided existing beam sizes are appropriate, and the resulting overturning forces can be resisted. In addition to being compatible with the rigidity of the moment frames, eccentric bracing has the advantage of being more adaptable than concentric bracing or shear walls in avoiding the obstruction of existing door and window openings. If architectural cladding is not a concern, reinforcement of existing members may be practical. The addition of cover plates to beam flanges can increase the moment capacity of the existing beams. Cover or box plates also may increase the moment capacity of the columns at the base, and thereby require that the foundation capacity also be increased. Increasing the moment capacity of columns with cover plates at the beam/column connection usually is not feasible because of the interference of the connecting beams. The addition of haunches below and/or above the beam may be effective for increasing the moment capacity of a deficient moment frame. The effects of the haunches will require a re-analysis of the frame, and the designer must investigate the stresses and the need for lateral bracing at the interface between the haunch and the beam or column. In many cases, it may not be feasible to increase the capacity of existing beams by providing cover plates on the top flange because of interference with the floor beams, slabs, or metal decking. (Note that for a bare steel beam, a cover plate on only the lower flange may not significantly reduce the stress in the upper flange.)

If, however, an existing concrete slab is adequately reinforced and detailed for composite action at the end of the beam, it may be economically feasible to increase the moment capacity by providing cover plates on the lower flanges at each end of the beam. Cover plates should be tapered to avoid an abrupt change in section modulus beyond the point where the additional section modulus is required. In some cases, the capacity of steel beams in rigid frames may be governed by lateral stability considerations. Although the upper flange may be supported for positive moments by the floor or roof system, the lower flange must be checked for compression stability in regions of negative moments. If required, the necessary lateral support may be provided by diagonal braces to the floor system.

(c) Strengthening techniques for inadequate beam/column joints. Current building code provisions for special moment frames require that the vertical shear capacity of the frame/column connection be capable of resisting the gravity loads plus the shear associated with the plastic moment

connections were generally designed with shear connections sized for the actual design loads. Strengthening of these deficient connections may be accomplished by welding the connection angles as indicated in Figure 8-4. The 1994 Northridge, California earthquake disclosed the vulnerability of steel-frame beam-to-column joints with full-penetration welds connecting the beam flange to the column flange. This joint detail, which was recommended by the steel industry and accepted as a prequalified detail by many of the building codes, was found to have failed in many of the buildings near the epicenter of this moderately severe earthquake. The failures consisted of cracks in the welds, predominantly in the lower beam flange, and occasionally extending into the beam web and/or into the column flange. Research pertaining to the evaluation, repair, modification, and design of steel moment frames, funded by FEMA, is currently in progress by the SAC joint venture, a partnership of the Structural Engineers Association of California, the Applied Technology Council, and California Universities for Research in Earthquake Engineering. Interim Guidelines (FEMA 267), published in 1995, provide guidance for repair of damaged connections and for modification of damaged or undamaged connections. For new buildings, FEMA 302 refers to the AISC Seismic Provisions that require testing of proposed joint details to confirm the required inelastic rotational capability. The steel industry has compiled a number of joint assemblies and welding specifications that have been tested and accepted by building departments. Pending resolution of the indicated uncertainties with the beam flange to column flange weld in existing buildings, when upgrading or strengthening of this connection is required, this document prescribes modification of the connection such that the flexural yielding will occur in the beam rather than at the connection. Several details have been developed to accomplish this objective, including:

- Tapered cover plates welded to the beam flanges and to the column flange (FEMA 172, Figure 3.1.1.2 a);
- Steel tee or wide-flange sections welded to the lower flange at the ends of the beam to form a haunched member (Figures 8-4 and 8-5); and
- Tapered upstanding ribs, welded to one or both flanges of the beam to form a haunched member (Figure 8-6).

As indicated above, the objective of these details is to restrict the stresses in the full penetration welds to the column flange by forcing the yield hinge to form in the beam beyond the strengthened portion. Restricting the strengthening to the lower flange eliminates the significant cost and disruption of removing the floor finish and the structural slab or decking to expose the top flange. In this regard, the second technique described above is considered to be the most effective in reducing the stress in both flange welds.

(d) Strengthening techniques for inadequate panel zone capacity. Beam/column panel zones can be overstressed due to seismic forces if the tensile capacity in the column web opposite the beam flange connection is inadequate (i.e., tearing of the column web); if the stiffness of the column flange where beam flange or moment plate weld occurs is inadequate (i.e., lateral bowing of the column flange);

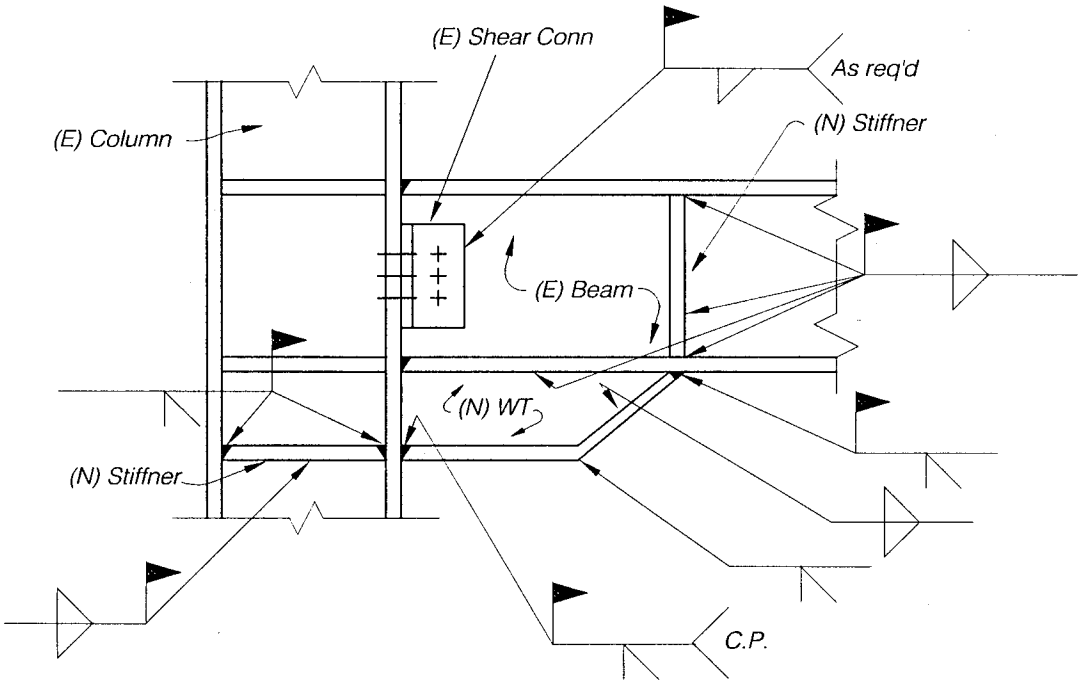

Figure 8-4. Rehabilitation of a Welded Moment Connection

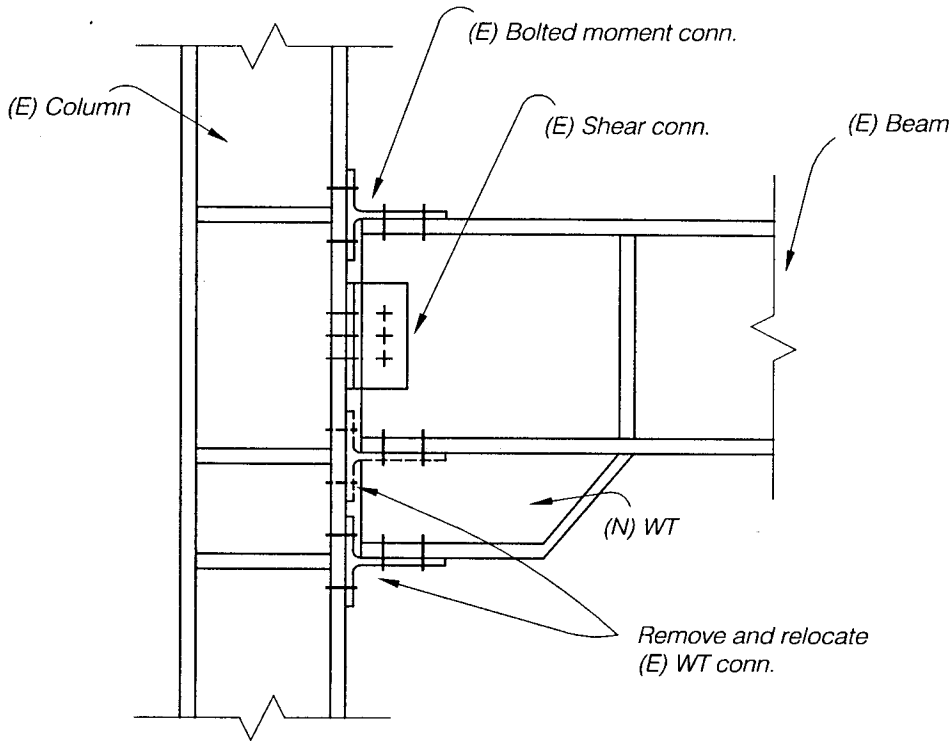

Note: See Figure 8-4 for welding of new WT haunch and stiffener.

Figure 8-5. Rehabilitation of a Bolted Moment Connection

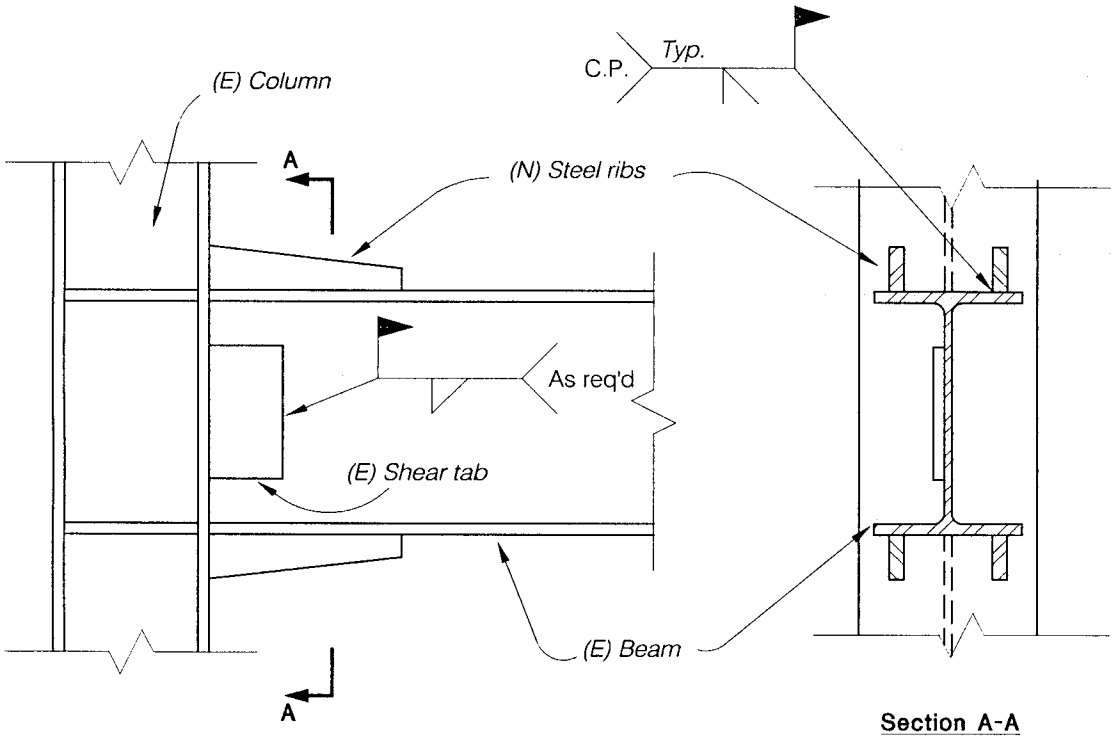

Figure 8-6. Strengthening a Pre-Northridge Moment Connection

capacity of the frame (i.e., $V_{D+LL}+2M_p/L$). Older steel moment frames with bolted or riveted if the capacity for compressive forces in the column web is inadequate (i.e., web crippling or buckling of the column web opposite the compression flange of the connecting beam); or if there is inadequate shear capacity in the column web (i.e., shear yielding or buckling of the column web). Deficient panel zones can be improved by:

- Providing welded continuity plates between the column flanges;
- Providing stiffener plates welded to the column flanges and web;
- Providing web doubler plates at the column web; and
- Reducing the stresses in the panel zone by providing supplemental vertical-resisting components (i.e., additional moment frames, braces, or shear walls).

Adding stiffener plates to the panel zone usually is the most cost-effective alternative. It should be noted that this technique corrects three of the four deficiencies identified above. Also, by confining the column web in the panel zone, shear buckling is precluded, and shear yielding in the confined zone may be beneficial by providing supplemental damping if the additional drift is acceptable. The cost for removal and replacement of existing architectural cladding and associated fireproofing needs to be considered in assessing cost-effectiveness.

(e) Techniques for reducing drift.

- Increasing the capacity, and therefore the stiffness, of the existing moment frame by cover plates or boxing (FEMA 172, Figure 3.1.1.2 b);
- Increasing the stiffness of the beams and the columns at their connections by providing haunches;
- Reducing the drift by providing supplemental vertical-resisting components (i.e., additional moment frames, braces, or shear walls);
- Increasing the stiffness by encasing columns in reinforced concrete; and
- Reducing the drift by adding supplemental damping.

Excessive drift generally is a concern in the control of seismic damage; however, for steel frames, there also may be cause for concern regarding overall frame stability. If the concern is excessive drift and not frame capacity, the most cost-effective alternative typically is increasing the rigidity of the system by the addition of bracing or shear walls; however, the critical elements in the system now will probably be the bracing or shear walls because of their greater relative rigidity, as compared to the moment frames. Providing steel gusset plates to increase stiffness and reduce drift may be cost- effective in some cases. This technique, however, must be used with caution, since the gussets may increase column-bending stresses, and increase the chance for a nonductile failure. Column and beam stresses must therefore be

checked where beams and columns interface with gussets or haunches, and column stability under a lateral displacement associated with the design earthquake should be verified. Increasing the stiffness of steel columns by encasement in concrete may be an alternative for reducing drift in certain cases. The principal contributing element to excessive story drift typically is beam flexibility; hence, column concrete encasement will only be partially effective, and is therefore only cost-effective when a building has relatively stiff beams and flexible columns. Boxing a column or cover-plating a beam is an effective technique to increase column and beam stiffness. The additional stiffness achieved in the beams or columns need not increase connection moment capacities if the boxing and cover plates are terminated a distance of at least one-half the member depth from the face of the joint. Reducing drift by adding supplemental damping is an alternative that is now being implemented in some seismic rehabilitation projects. Typically, bracing elements need to be installed in the moment frame so that discrete dampers can be located between the flexible moment frame elements and the stiff bracing elements.

(2) Concrete moment frames. Strengthening options for reinforced concrete moment frame buildings are provided in Table 8-4.

(a) Deficiencies. The principal deficiencies in concrete moment frames are:

- Inadequate shear or flexural capacity in the columns or beams;
- Inadequate joint shear capacity; and
- Inadequate development length at reinforcement splices or anchorages.

(b) Strengthening techniques for inadequate shear or flexural capacity in columns or beams. Deficient shear or flexural capacity in columns or beams of concrete moment frames can be improved by:

- Increasing the shear and flexural capacity by providing concrete jackets with additional transverse and flexural reinforcement (FEMA 172, Figures 3.1.2.2 a and 3.1.2.2 b);
- Increasing the shear and/or flexural capacity of beams or columns by confinement with reinforced concrete, steel, or fiber-reinforced polymer (FRP) sheets (Figure 8-7);
- Reducing the seismic stresses in the existing frames by providing supplemental vertical-resisting elements (i.e., additional moment frames, braces, or shear walls); and
- Changing the system to an infilled shear wall system by infilling the reinforced concrete frames with reinforced concrete (FEMA 172, Figure 3.1.2.2c).

Improving the ductility and strength of concrete frames by jacketing with additional concrete generally is not cost-effective because of the difficulty associated with providing the necessary confinement and shear reinforcement in the beams,

Table 8-4. Strengthening Options for Reinforced Concrete Frame Buildings

Structural Component	Deficiency	Strengthening Technique	Reference	Applicable Figure	
				This Document	FEMA 172
a. Frames	(1) Inadequate shear or flexural capacity	(a) Provide reinforced concrete jackets	para 8-2b(2)(b)		3.1.2.2a 3.1.2.2b
		(b) Confine with steel jackets	para 8-2b(2)(b)		
		(c) Overlay with FRP sheets	para 8-2b(2)(b)	8-7	
		(d) Provide supplemental vertical resisting elements	para 8-2a(1)(b)		3.4 and 3.4.2
	(2) Inadequate joint shear capacity	(a) In-fill the frames with reinforced concrete walls.	para 8-2b(2)(b)		3.1.2.2c
		(b) Provide reinforced concrete jackets	para 8-2b(2)(b)		3.1.2.2b
		(c) Provide supplemental vertical resisting elements	para 8-2a(1)(b)		3.4 and 3.4.2
	(3) Inadequate development lengths	(a) Provide reinforced concrete jackets	para 8-2b(2)(b)		3.1.2.2b
		(b) Confine with steel or FRP	para 8-2b(2)(b)		
		(c) Reduce allowable capacity	para 8-2b(2)(d)		
b. Concrete floor or roof diaphragms	(1) Inadequate shear capacity	(a) Overlay with reinforced concrete	para 8-2f(1)(b)		3.5.2.2
	(2) Inadequate chord capacity	(a) Add new concrete or steel chord	para 8-2f(1)(d)		3.5.2.3 and 3.5.4.3
	(3) Shear or tensile stresses at openings	(a) Add new structural member below the slab	para 8-2f(1)(d)		3.5.2.4.a
c. Steel deck floor or roof diaphragms	(1) Inadequate shear capacity	(a) Additional welding	para 8-2f(4)(b)		
		(b) Add concrete fill or overlay	para 8-2f(4)(b)		3.5.5.2.a
		(c) Provide horizontal bracing system	para 8-2f(4)(b)		3.5.5.2.b

Table 8-4. Strengthening Options for Reinforced Concrete Frame Buildings

Structural Component	Deficiency	Strengthening Technique	Reference	Applicable Figure	
				This Document	FEMA 172
	(2) Inadequate shear transfer	(a) Add new steel member between supports	para 8-2f(4)(b)	8-12	
d. Spread footings	(1) Excessive soil bearing pressure	(a) Underpin footing	para 8-2g(2)(b)		3.6.1.2a
		(b) Add new piers drilled through footing	para 8-2g(2)(b)	8-17	
		(c) Modify existing soil	para 8-2g(2)(b)		
		(d) Provide tie beams	para 8-2g(2)(b)		
	(2) Excessive uplift forces	(a) Add new piers drilled through footing.	para 8-2g(2)(b)	8-17	
		(b) Provide new tie beams	para 8-2g(2)(b)		
	(3) Inadequate passive pressure	(a) Enlarge footing	para 8-2g(2)(b)		
		(b) Modify existing soil	para 8-2g(2)(b)		
		(c) Provide new tie beams	para 8-2g(2)(b)		
e. Pile or drilled pier foundations	(1) Inadequate tensile or compression capacity	(a) Provide new tie beams	para 8-2g(2)(b)		3.6.3.2
		(b) Drive additional piles, remove and replace pile cap	para 8-2g(3)(b)		
	(2) Inadequate lateral load capacity	(a) Modify existing soil	para 8-2g(2)(b)		
		(b) Provide new tie beams	para 8-2g(2)(b)		
		(c) Enlarge the pile cap	para 8-2g(3)(b)		
		(d Drive additional piles, remove and replace pile cap	para 8-2g(3)(b)		3.6.3.2

Sheet 2 of 2

Figure 8-7. FRP Overlay to Enhance the Shear and Flexural Capacity of Concrete Beams

columns, and beam-column connection zones. When deficiencies are identified in these frames, it will probably be more cost-effective to consider adding reinforced concrete shear walls or filling in the frames with reinforced concrete. Either of these alternatives will tend to reduce the lateral load resisted by frame action. This is because the greater rigidity of the walls will increase the percentage of the lateral load to be resisted by the walls (i.e., lateral forces will be attracted away from the relatively flexible moment frames and into the more rigid walls). This is especially true for buildings with rigid diaphragms. These alternatives also typically will require upgrading of the foundations, which may be costly. The seismic performance of frames with infilled walls is discussed in paragraph 8-2c. The decision regarding whether the new walls should be in the interior of the building or at its perimeter, or as exterior buttresses, usually will depend on nonstructural considerations such as aesthetics and disruption or obstruction of the functional use of the building. Recent developments in California, associated with seismic retrofit of elevated freeway structures, have promoted the use of steel jackets to increase the shear capacity and confinement of concrete columns. Circular and oval steel jackets have been successfully used by Caltrans based on the results of prior research. FRP wrapping of concrete beams and columns in buildings (Figure 8-7) has also had limited application and testing. While test results indicate reasonable effectiveness of the wrapping, resistance to long-term weathering or deterioration has not been fully established.

(c) Strengthening techniques for inadequate joint shear capacity. Techniques for improving the shear capacity of concrete moment frame joints are similar to those for improving the shear or flexural capacity of columns and beams. Jacketing of the joint area is even more difficult and labor-intensive than the jacketing of the frame members because of the need to drill holes to install new transverse reinforcement through the existing beams framing into the joint. FRP wrapping has also been used to increase joint shear capacity. Limited testing has been performed for specific applications, but consensus details and analytical procedures are not yet available. The other two alternative techniques described above for columns and beams will usually also be more cost-effective for the frame joints.

(d) Strengthening techniques for inadequate development length for reinforcement splices and anchorages. ACI 318 specifies minimum development lengths for reinforcement splices and anchorages with factors to increase the minimum length if confinement by transverse reinforcement or the concrete cover over the bar is inadequate. If the existing bar development lengths conform to the minimum ACI 318 requirements, the adverse effects of inadequate confinement or concrete cover can be mitigated by jacketing as described above for columns and beams. FRP wrapping has been successfully used to provide additional confinement for longitudinal reinforcement splices in columns. As indicated in the preceding paragraph, the use of FRP for beams and beams/column joints has been based on limited testing of specific applications. If the development lengths do not conform to the minimum ACI 318 requirements, the reinforcement must be considered as nonconforming, and the allowable stresses reduced proportionately.

(3) Flat slab/column frames. Flat slab systems, with or without column capitals or drop

panels, are a common structural system in older commercial buildings. Many of these systems were designed primarily for gravity loads.

(a) Deficiencies. Common deficiencies include:

- Inadequate shear capacity, usually inadequate punching shear capacity adjacent to columns; and

- Inadequate flexural capacity, usually inadequate flexural reinforcement for positive seismic moments at columns.

(b) Strengthening techniques for the above deficiencies are provided in Moehle, Nicoletti, and Lehman, 1994; however, these techniques are very invasive and labor-intensive. The most cost-effective strengthening technique for these systems will generally be the addition of supplemental shear walls or bracing, rather than strengthening the slab/column system to resist seismic forces.

(4) Precast concrete moment frames.

(a) Deficiencies. Existing precast concrete moment frames may exhibit the same deficiencies as the cast-in-place moment frames. The principal additional deficiency of precast concrete moment frames is inadequate capacity and/or ductility of the joints between the precast units.

(b) Strengthening techniques for the additional deficiencies in precast concrete moment frames. Deficient capacity and ductility of precast concrete moment frame connections can be improved by:

- Removing existing concrete in the precast elements to expose the existing reinforcing steel; providing additional reinforcing steel welded to the existing steel (or drilled and grouted); and replacing the removed concrete with cast-in-place concrete.

- Reducing the forces on the connections by providing supplemental vertical-resisting components (i.e., additional moment frames, braces, or shear walls) as discussed in paragraph 8-2b(4)(b).

Reinforcing the existing connections as indicated in the first technique is not cost-effective because of the difficulty associated with providing the necessary confinement and shear reinforcement in the connections. Providing supplemental frames or shear walls generally is more cost-effective; however, the two alternatives may be utilized in combination.

c. Frames with infills. Reinforced concrete or structural steel moment frames that are monolithic with or completely encased in reinforced concrete walls will tend to perform as shear walls with boundary members. In older existing buildings, the infill materials generally consist of reinforced or unreinforced masonry (i.e., brick, concrete blocks, or hollow clay tile). The performance of these infilled frames, as discussed in this paragraph, has been found to be best represented with the development of assumed diagonal compression struts, as indicated in Figure C7-1 of FEMA 274. The resulting mechanism is similar to that of a braced frame, and the stiffness is greater than the sum of the infill and frame stiffnesses considered separately. Modeling and

analysis of the infill and the frame are provided in Section 7.5.2 of FEMA 273, and illustrated in Figures C7-1 through C7-5 of FEMA 274.

(1) Deficiencies. The principal deficiencies in moment frames with infill walls are:

- Inadequate shear strength of the infill;
- Crushing of the infill at the upper and lower corners due to the diagonal compression strut action in the infill wall;
- Shear failure of the beam/column connection in the steel frames, or direct shear transfer failure of the beam or column in concrete frames;
- Tensile failure of the columns, their connections, or lap splices due to the uplift forces resulting from the braced-frame action induced by the infill;
- Splitting of the infill due to the orthogonal tensile stresses developed in the diagonal compressive strut; and
- Loss of infill by out-of-plane forces due to loss of bearing or excessive slenderness of the infill wall.

(a) Partial-height infills or infills with door or window openings will tend to brace concrete or steel frames, and the system will resist lateral forces in a manner similar to that of a knee-braced frame. The lateral stiffness of the shortened columns is increased so that, for a given lateral displacement, a larger shear force is developed in the shortened column compared to that in a full-height column. If the column is not designed for this condition, shear failure of the column could occur, particularly in concrete frames, in addition to the other potential deficiencies indicated above for completely infilled frames.

(b) Delamination. In some cases, the exterior face of the infill may extend beyond the edge of the concrete or steel frame columns or beams. For example, an unreinforced brick infill in a steel frame may have one wythe of brick beyond the edge of the column or beam flange to form a uniform exterior surface. This exterior wythe is particularly vulnerable to delamination or splitting at the collar joint (i.e., the vertical mortar joint between the wythes of brick), as the infilled frame deforms in response to lateral loads. In the modeling and analysis of these walls, only the portion of the wall bounded by the frame shall be considered as the effective thickness of the infill. The masonry wythes that are beyond the plane of the frame shall be considered as veneer, and shall be adequately anchored to the infill. Because the in-plane deformation of completely infilled frames is very small, the potential for delamination is greater for partial infills or those with significant openings. The potential life-safety hazard for this condition should be evaluated, and may be mitigated as described above.

(c) Loss of infill. Falling debris resulting from the failure of an existing infill wall also poses a life-safety hazard. Frames may be infilled with concrete or various types of masonry such as solid masonry, hollow clay tile, or gypsum masonry. These infills may be reinforced, partially reinforced,

or unreinforced. Infills (particularly brittle unreinforced infills such as hollow clay tile or gypsum masonry) often become dislodged upon failure of the wall in shear. Once dislodged, the broken infill may fall and become a life-safety hazard, or may preclude safe egress from the building. Mitigation of this hazard can be accomplished by removing the infill and replacing it with a nonstructural wall as described above. The infill can also be "basketed" by adding a constraining member such as wire mesh. Basketing will not prevent the infill from failing, but will prevent the debris from falling. Unreinforced infills that comply with the h/t ratio for URM walls in Table 4-2 of FEMA 310 may be considered to be adequate for out-of-plane forces, provided that the top of the infill is in full contact with the soffit of the frame beams. Infills that have excessive h/t ratios may be enhanced with FRP sheets on both sides of the wall.

(2) Strengthening techniques for inadequate shear capacity of infill walls. Inadequate shear capacity in the infilled walls of moment frames can be improved by:

- Eliminating the hazardous effects of the infill by providing a gap between the infill and the frame and providing out-of-plane support; and

- Correcting the deficiencies as prescribed for inadequate shear capacity of reinforced concrete or masonry shear walls in paragraph 8-2a(1)(b).

If the frame with a partial-height infill wall has adequate capacity for the prescribed forces without the infill wall, the most expedient correction is to provide a resilient joint between the column and wall to allow the deformation of the column to take place without restraint. This may be accomplished by cutting a gap between the wall and the column, and filling it with resilient material (out-of-plane restraint of the infill still must be provided), or by removing the infill wall and replacing it with a nonstructural wall that will not restrain the column. If the frame has insufficient capacity for the prescribed forces without the infill, consideration should be given to completely in-filling an adequate number of framed bays, or providing supplemental vertical-resisting elements. For the infill to be effective, it must be in tight contact with the frame columns and beam soffits. The relative rigidities of the shear wall and moment frames in other bays must be considered when distributing the lateral loads, and evaluating the wall and frame stresses.

(3) Strengthening techniques for other deficiencies. Deficiencies pertaining to concrete frame members may be rehabilitated as described for concrete moment frames in paragraph 8-2b(2); however, the presence of the infill makes it more difficult to access the frame for the remedial work. It may be more expedient and cost effective to consider the addition of supplemental shear walls to reduce the forces on the deficient infill walls. Deficiencies in steel frames are more easily addressed.

(a) Inadequate shear capacity in a steel-beam web shear connection can be improved by welding the connection angles as indicated in Figure 8-8. If the connecting bolts are ASTM A325, the bolt capacity may be combined with weld capacity. If the bolts are ASTM A307, which are more prevalent in the older buildings, the welds must be designed to resist the entire shear.

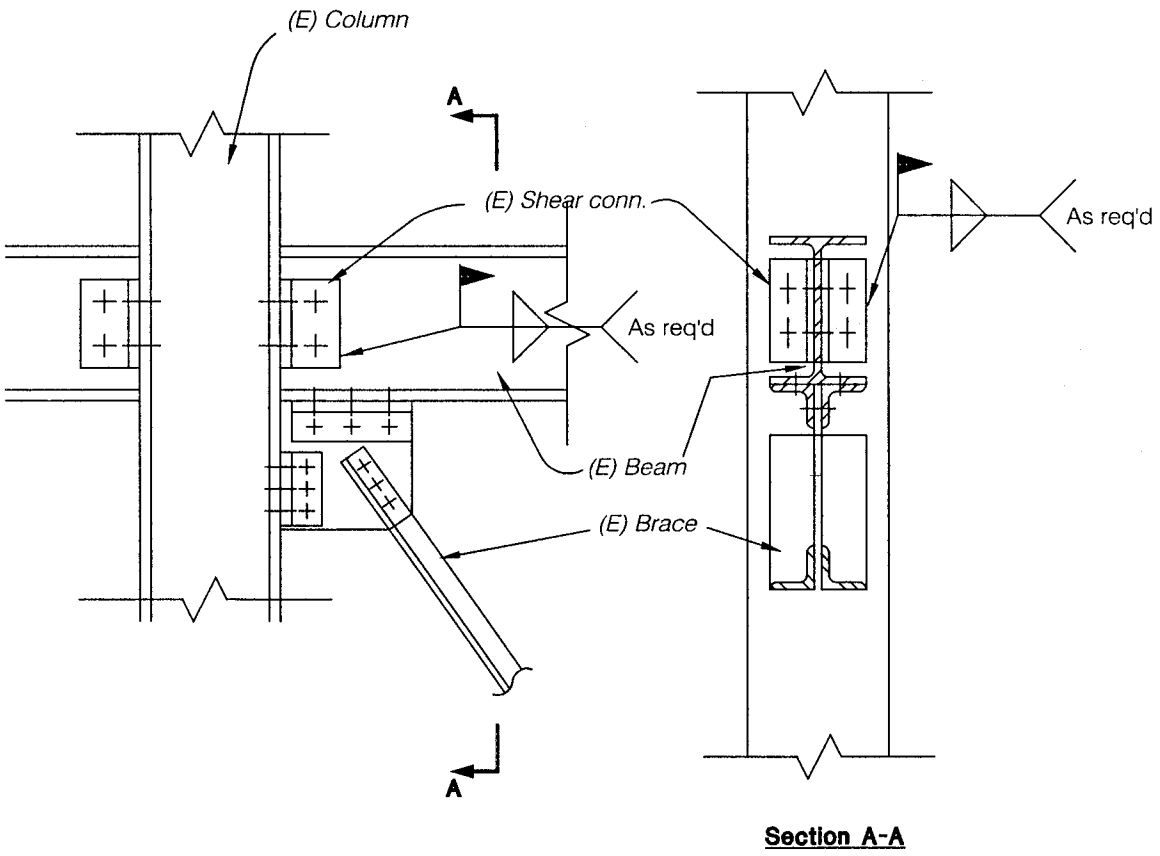

Figure 8-8. Strengthening a Beam Shear Connection

(b) Inadequate tensile capacity in a column splice. Steel columns in older buildings designed for minimal seismic force were typically spliced by milling of the ends for direct bearing with bolted splice plates, connecting the web and/or the flanges. Columns in buildings designed for more significant seismic forces may have milled webs with bolted web splice plates and flanges spliced with partial penetration welds. In either case, additional tensile capacity can be achieved by welding the existing splice plates, or by adding new welded splice plates as indicated in Figure 8-9. Inadequate tensile capacity in a concrete frame column may be mitigated by exposing the reinforcement and welding the lap splices, or by jacketing with reinforced concrete or FRP.

d. Braced frames. Braced frames are vertical elements that resist lateral loads through tension or compression braces. Braced frames are classified as having either concentric or eccentric bracing. The use of eccentric braced frames in seismic design is rather recent, and it is unlikely that those buildings would be candidates for retrofit in the military seismic hazard mitigation program. Concentric bracing may consist of single or double diagonals, chevrons, or K-braces. K-bracing has undesirable performance characteristics for seismic loads in that buckling of the compression brace results in an unbalanced horizontal force on the column from the remaining tension brace. Some building codes permit K-bracing only in low seismic zones, where there is a small probability of exceedence for the design seismic forces. In the higher seismic zones, these braces should be removed and the system modified to one of the other bracing configurations; further, this should be done in all other seismic zones if possible.

Chevron bracing has similar characteristics in that buckling of one brace in compression results in an unbalanced tensile force from the remaining brace. With chevron bracing, the unbalanced force occurs on the beam rather than on the column. Nonetheless, the unbalanced tensile brace reaction should be considered in the rehabilitation, particularly in the case of the inverted V configuration in which the unbalanced force is additive to the gravity loads supported by the beam. Braced frames are typically of steel construction; however, concrete-braced frames are occasionally constructed. Strengthening options for steel-braced frame buildings are provided in Table 8-5.

(1) Deficiencies. The principal deficiencies of steel concentrically braced frames are:

- Inadequate lateral force capacity of the bracing system governed by buckling of the compression brace;
- Inadequate capacity of the brace connection;
- Inadequate axial load capacity in the columns or beams of the bracing system; and
- Brace configuration that results in unbalanced tensile forces, causing bending in the beam or column when the compression brace buckles.

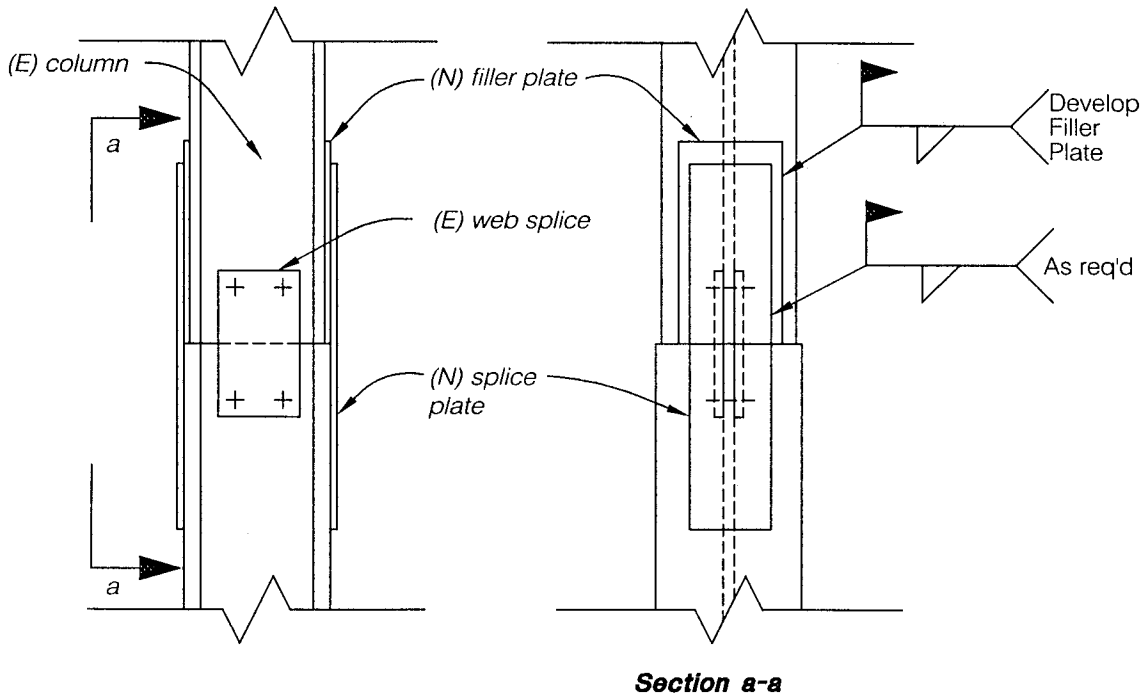

Figure 8-9. Strengthening of a Column Splice

Table 8-5. Strengthening Options for Steel-Braced-Frame Buildings

Structural Component	Deficiency	Strengthening Technique	Reference	Applicable Figure This Document	Applicable Figure FEMA 172
a. Steel frame	(1) Inadequate shear capacity in beam connections	(a) Provide additional welding to shear connection	para 8-2b(1)(c)	8-4 and 8-8	
	(2) Inadequate column axial load capacity	(a) Box column flanges	para 8-2b(1)(e)		3.1.1.2b
		(b) Provide supplemental vertical resisting elements.	para 8-2a(1)(b)		3.4 and 3.4.2
	(3) Inadequate column splice capacity	(a) Provide additional splice plates and welding.	para 8-2c(3)(b)	8-9	
	(4) Inadequate shear or uplift capacity at base	(a) Extend base plate and add anchor bolts	para 8-3b(2)(b)	8-20	
b. Bracing	(1) Inadequate in-plane compression capacity	(a) Provide secondary bracing	para 8-2d(2)	8-11	
	(2) Inadequate tensile or compression capacity	(a) Double single member bracing or "star" double angle bracing	para 8-2d(2)	8-10	3.3.1.2
		(b) Provide supplemental vertical resisting elements	para 8-2a(1)(b)		3.4 and 3.4.2
	(3) Inadequate brace connection	(a) Provide additional welding	para 8-2d(3)		
		(b) Remove and replace with stronger connection	para 8-2d(3)		
c. Concrete floor or roof diaphragms	(1) Inadequate shear capacity	(a) Overlay with reinforced concrete	para 8-2f(1)(b)		3.5.2.2
	(2) Inadequate chord capacity	(a) Add new steel or concrete chord	para 8-2f(1)(c)		3.5.2.3 and 3.5.4.3
	(3) Shear or tensile stresses at openings	(a) Add structural member below the slab	para 8-2f(1)(d)		3.5.2.4a
		(b) Add concrete topping with trim bars	para 8-2f(1)(e)		3.5.2.4b
		(c) Fill-in opening	para 8-2f(1)(e)		3.2.1.2b

Sheet 1 of 2

Table 8-5. [illegible] Frame Buildings

Structural Component	Deficiency	Strengthening Technique	Reference	Applicable Figure This Document	Applicable Figure FEMA 172
d. Steel deck floor or roof diaphragms	(1) Inadequate shear capacity	(a) Additional welding	para 8-2f(4)(b)		
		(b) Add concrete fill in overlay	para 8-2f(4)(b)		3.5.5.2a
		(c) Provide horizontal bracing	para 8-2f(4)(b)		3.5.5.2b
	(2) Inadequate shear transfer	(a) Add steel member between joists	para 8-2f(4)(b)	8-12	
e. Spread footings	(1) Excessive soil bearing pressure	(a) Underpin footing	para 8-2g(2)(b)		3.6.1.2a
		(b) Add new piers drilled through footing	para 8-2g(2)(b)	8-17	
		(c) Modify existing soil	para 8-2g(2)(b)		
		(d) Provide tie beams	para 8-2g(2)(b)		
	(2) Excessive uplift forces	(a) Add new piers drilled through footing	para 8-2g(2)(b)	8-17	
		(b) Provide new tie beams	para 8-2g(2)(b)		
	(3) Inadequate passive pressure	(a) Enlarge footing	para 8-2g(2)(b)		
		(b) Modify existing soil	para 8-2g(2)(b)		
		(c) Provide new tie beams	para 8-2g(2)(b)		
f. Pile or drilled pier foundations	(1) Inadequate tensile or compression capacity	(a) Provide new tie beams	para 8-2g(2)(b)		
		(b) Drive additional piles, remove and replace pile cap	para 8-2g(3)(b)		3.6.3.2
	(2) Inadequate lateral load capacity	(a) Modify existing soil	para 8-2g(2)(b)		
		(b) Provide new tie beams	para 8-2g(2)(b)		
		(c) Enlarge the pile cap	para 8-2g(3)(b)		
		(d) Drive additional piles, remove and replace pile cap	para 8-2g(3)(b)		3.6.3.2

Sheet 2 of 2

(2) Strengthening techniques for inadequate brace capacity. Deficient brace compression capacity can be improved by:

- Increasing the capacity of the braces by adding new members, thus increasing the area and reducing the radius of gyration of the braces (Figure 8-10);

- Increasing the capacity of the member by reducing the unbraced length of the existing member by providing secondary bracing (Figure 8-11);

- Providing greater capacity by removing and replacing the existing members with new members of greater capacity; and

- Reducing the loads on the braces by providing supplemental vertical-resisting components (i.e., shear walls, bracing, or eccentric bracing) as discussed in paragraph 8-1a(3).

A brace member may be designed to resist both tension and compression forces, but its capacity for compression forces is limited by potential buckling, and is therefore less than the capacity for tensile forces.

Since the design of the system is generally based on the compression capacity of the brace, some additional capacity may be obtained by simply reducing the unsupported length of the brace by means of secondary bracing, as shown in Figure 8-11, provided the connections have adequate reserve capacity, or can be strengthened for the additional loads. If significant additional bracing capacity is required, it will be necessary to consider strengthening or replacement of the brace. Single-angle bracing can be doubled; double-angle bracing can be "starred"; channels can be doubled; and other rolled sections can be cover-plated. New sections should be designed to be compact, if possible, since they will perform with significantly more ductility than noncompact sections. These modifications probably will require strengthening or redesign of the connections. The other members of the bracing system (i.e., columns and beams) must be checked for adequacy with the new bracing loads. Strengthening of existing K- or chevron bracing should be undertaken only after careful evaluation of the additional bending forces following the buckling of the compression bracing. Where the existing bracing in these systems is found to have inadequate capacity, the preferred solution is to replace it with a diagonal or cross-bracing configuration. It is usually a good idea to limit the strengthening of the existing bracing to the capacity of the other members of the bracing system and the foundations, and to provide additional bracing if required. An alternative would be to provide new shear walls or eccentric bracing. Construction of supplemental shear walls may be disruptive, and probably will require new foundations. The greater rigidity of the shear walls as compared with that of the bracing also may tend to make the existing bracing relatively ineffective; thus, the most cost-effective alternatives are considered to be strengthening the existing bracing, or providing additional concentric bracing.

(3) Strengthening techniques for inadequate capacity of the brace connection. Deficient brace connection can be improved by:

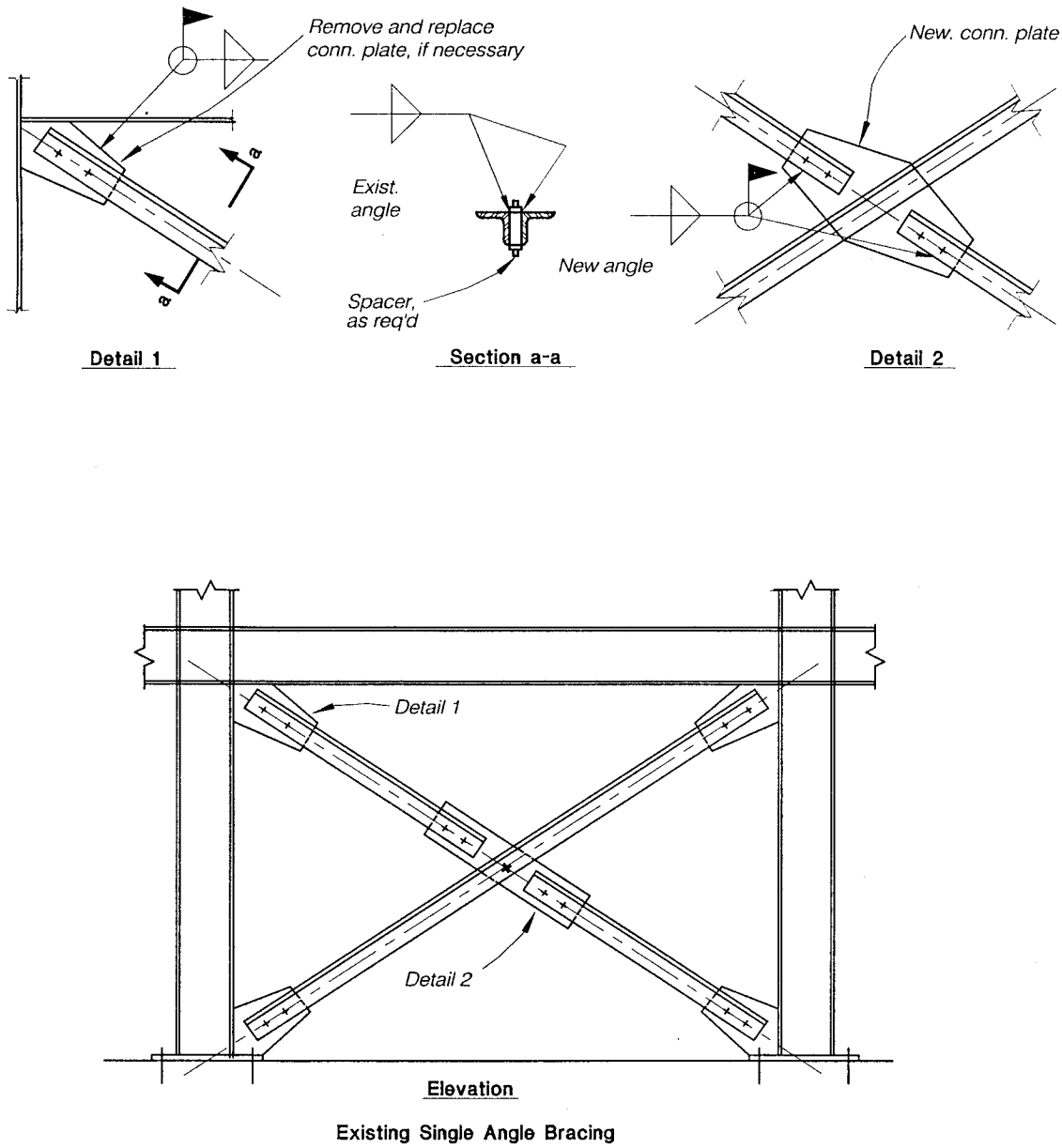

Figure 8-10. Strengthening of Single-Angle Bracing

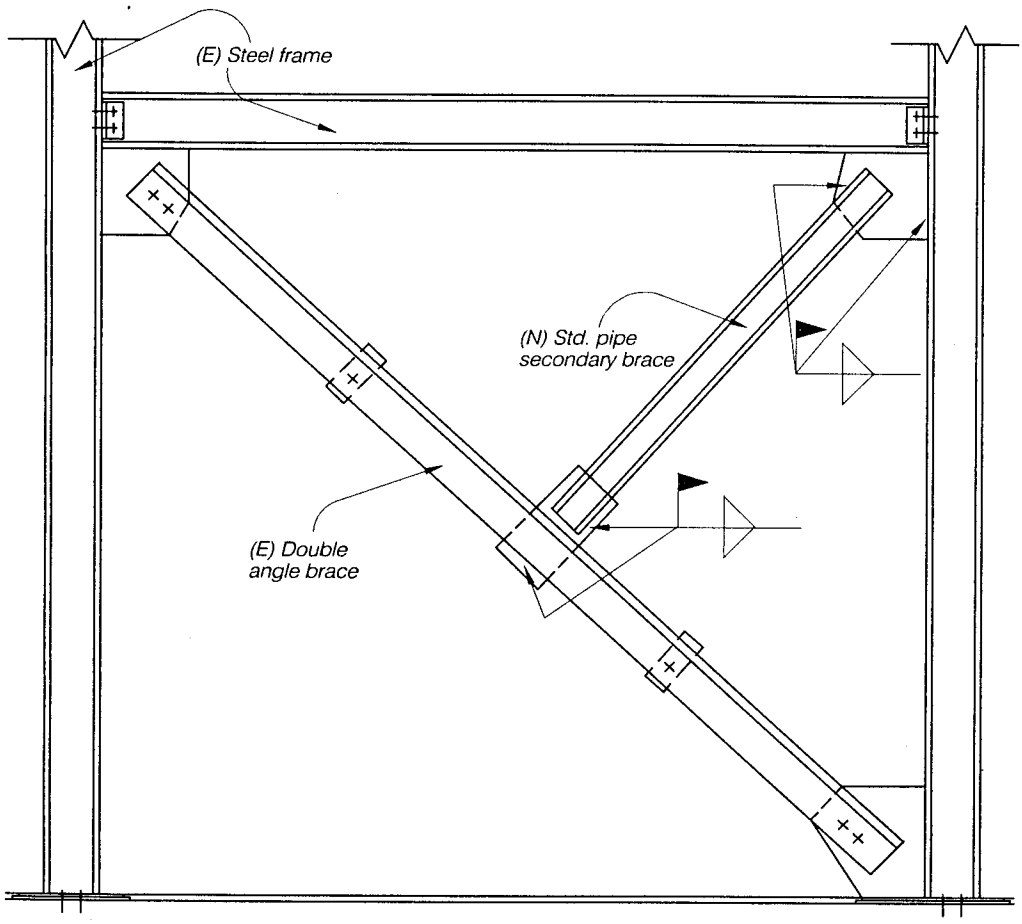

Figure 8-11. Strengthening an Existing Brace with Secondary Bracing

- Increasing the capacity of the connection by additional bolting or welding;

- Increasing the capacity of the connections by removing and replacing the connection with elements of greater capacity; and

- Reducing the loads on the-braces and their connections by providing supplemental vertical-resisting components (i.e., shear walls, bracing, or eccentric bracing).

Adequate capacity of brace connections is essential to the proper performance of the brace. The capacity of the brace is limited by its compression capacity, and the connection may have been designed for this load. When the brace is loaded in tension, however, the brace may transmit significantly higher forces to the connection. If the existing connection members (e.g., gusset plates) have sufficient capacity (TI 809-04, Figure 7-22), the most economical alternative may be to increase the existing connection capacity by providing welding or bolts. If the existing gusset plates have inadequate capacity, the existing configuration and accessibility need to be assessed to determine whether it is more economical to add supplemental connecting members, or replace the existing connecting members with members of greater capacity. If the existing brace members require strengthening or replacement with members of greater capacity, it is probable that new connections would be the most cost-effective alternative. Whether reducing loads by adding supplemental members is a cost-effective alternative is most likely to be a consideration when assessing the capacities of the braces, not the brace connections. The merits of this alternative are discussed above.

(4) Strengthening techniques for inadequate axial load capacity by adding cover plates to the member flanges or by boxing the flanges. Deficient axial load capacity of existing bracing system columns and beams can be improved by:

- Providing additional load capacity by adding cover plates to the member flanges or by boxing the flanges;

- Providing additional axial load capacity by jacketing the existing members with reinforced concrete; and

- Reducing the loads on the beams and columns by providing supplemental vertical-resisting components (i.e., shear walls, bracing, or eccentric bracing).

The most cost-effective alternative for increasing the capacity of the existing beams and columns in a concentrically braced frame system is to add cover plates to the flanges or to box the flanges. The effort involved in adding cover and box plates includes removing the existing fireproofing and nonstructural obstructions. Jacketing of existing members with reinforced concrete would seldom be cost-effective due to the significant forming effort required. The relative merits of reducing the loads by providing supplemental members is discussed in previous paragraphs.

e. Rod or other tension bracing.

(1) Deficiencies. The principal deficiencies of rod or other tension bracing systems are:

- Inadequate tension capacity of the rod, tensile member, or its connection; and
- Inadequate axial capacity of the beams or columns in the bracing system.

(2) Strengthening techniques for inadequate tension capacity of the rod, or other tension member, or its connection. Deficient tension capacity of the rod or other tension member and its connection can be improved by:

- Increasing the capacity by strengthening the existing tension members;
- Increasing the capacity by removing the existing tension members and replacing with new members of greater capacity;
- Increasing the capacity by removing the existing tension member and replacing it with a diagonal or X-bracing capable of resisting compression as well as tension forces; and
- Reducing the forces on the existing tension members by providing supplemental vertical-resisting elements (i.e., additional tension rods).

Tension bracing is commonly found in light industrial steel-frame buildings, including some designed for prefabrication. The most common deficiency is inadequate tensile capacity in the tension rods. These rods generally are furnished with upset ends so that the effective area is in the body of the rod rather than at the root of the threads in the connection. It is therefore rarely feasible to strengthen a deficient rod; hence, correction of the deficiency likely will require removal and replacement with larger rods; removal of existing tension bracing, and replacement with new bracing capable of resisting tension and compression; or installation of additional bracing. When replacing existing tension braces with new braces capable of resisting tension and compression, it is good practice to balance the members (i.e., design the system such that approximately the same number of members act in tension as in compression). Increasing the size of the bracing probably will require strengthening of the existing connection details, and also will be limited by the capacity of the other members of the bracing system or the foundations, as discussed above for ordinary concentric bracing. The effectiveness of replacing the tension bracing with members capable of resisting compression forces depends on the length of the members, and the need for secondary members to reduce the unbraced lengths. Secondary members may interfere with existing window or door openings. The most cost-effective technique for correction of the deficiency probably will be to provide additional bracing, unless functional or other nonstructural considerations (e.g., obstruction of existing window or door openings) preclude the addition of new bracing.

(3) Strengthening techniques for inadequate beam or column capacity.

Deficient axial capacity of the beams or columns of the bracing systems can be improved by:

- Increasing the axial capacity by adding cover plates to or by boxing the existing flanges; and

- Reducing the forces on the existing columns or beams by providing supplemental vertical-resisting components (i.e., braced frames or shear walls).

Reinforcing the existing beams or columns with cover plates or boxing the flanges are generally the most cost-effective alternatives. If supplemental braces or shear walls are required to reduce stresses in other structural components such as the tension rods or the diaphragm, the addition of supplemental vertical- resisting components may be a viable alternative.

f. Diaphragms. Diaphragms are horizontal subsystems that transmit lateral forces to the vertical-resisting elements. Diaphragms typically consist of the floors and roofs of a building. In this document, the term "diaphragm" also includes horizontal bracing systems. There are five principal types of diaphragms: timber diaphragms, concrete diaphragms, precast concrete diaphragms, steel decking diaphragms, and horizontal steel bracing. Inadequate chord capacity is listed as a deficiency for most types of diaphragms. Theoretical studies, testing of diaphragms, and observation of earthquake-caused building damage and failures provide evidence that the commonly used method of determining diaphragm chord force (i.e., comparing the diaphragm to a flanged beam and dividing the diaphragm moment by its depth) may lead to exaggerated chord forces, and thus overemphasize the need for providing an "adequate" boundary chord. Before embarking on the repair of existing chord members or the addition of new ones, the need for such action should be considered carefully, with particular attention to whether the beam analogy is valid for calculating chord forces in the diaphragm under consideration. Since few diaphragms have span-depth ratios such that bending theory is applicable, the capacity of the diaphragm to resist the tensile component of shear stress could be compared with tensile stresses derived from deep beam theory. In analyzing diaphragms by beam theory, chords provided by members outside of the diaphragms, but connected to their edges, may be considered and may satisfy the chord requirement.

(1) Concrete diaphragms.

(a) Deficiencies. The principal deficiencies of monolithic concrete diaphragms (i.e., reinforced concrete or post-tensioned concrete diaphragms) are:

- Inadequate in-plane shear capacity of the concrete diaphragm;

- Inadequate diaphragm chord or collector capacity; and

- Excessive shear or tensile stresses at the diaphragm openings or plan irregularities.

(b) Strengthening techniques for inadequate shear capacity. Deficient in-plane shear capacity of monolithic concrete diaphragms can be improved by:

- Increasing the shear capacity by overlaying the concrete diaphragm

with a new reinforced concrete topping slab (FEMA 172, Figure 3.5.2.2); and

- Reducing the shear in the existing concrete diaphragm by providing supplemental vertical-resisting components (i.e., shear walls or braced frames).

Concrete diaphragms usually are strengthened with a concrete overlay. This will require removal and replacement of the existing partitions and floor finishes, and will be disruptive to ongoing operations even though the work can be limited to one floor or a portion of a floor at a time. Adding the concrete overlay also will increase the dead weight of the structure; therefore, existing members, connections, and foundations must be checked to ensure that they are capable of resisting these added loads. It may be possible to avoid strengthening a concrete diaphragm by providing additional shear walls or vertical bracing that will reduce the diaphragm shears. This alternative generally is more costly than the overlay, but it may be competitive when it can be restricted to selected areas of the building, and when minimal work is required on the foundations. For shear transfer, new reinforced concrete or masonry shear walls will require dowels grouted in holes drilled in the concrete diaphragms. When the concrete diaphragm is supported on steel framing, shear walls or vertical bracing may be located under a supporting beam. Dowels or other connections for shear walls or bracing may be welded to the steel beam, but it also may be necessary to provide additional shear studs, welded to the steel beam, in holes drilled in the diaphragm slab to facilitate the shear transfer from the concrete slab to the steel beam. When drilling or cutting an existing reinforced concrete slab, care must be taken to avoid damage to the existing reinforcement, unless the result of cutting the reinforcement has been considered, and any required shoring or other necessary measures have been taken. Special care should be exercised to avoid damaging or cutting prestressing tendons. When it is necessary to cut unbonded tendons, in addition to the above precautions, the tendons shall be unloaded at their anchorage prior to being cut.

(c) Strengthening techniques for inadequate in-plane shear transfer and out-of-plane wall anchorage in concrete diaphragms are provided in paragraph 8-3a.

(d) Strengthening techniques for inadequate flexural capacity. Deficient flexural capacity in monolithic concrete diaphragms can be improved by:

- Increasing the flexural capacity by removing the edge of the diaphragm slab and casting a new chord member integral with the slab (FEMA 172, Figure 3.5.2.3);

- Adding a new chord member by providing a new, reinforced concrete or steel member above or below the slab and connecting the new member to the existing slab with drilled and grouted dowels or bolts (similar to FEMA 172, Figure 3.5.4.3); and

- Reducing the existing flexural stresses by providing supplemental

vertical-resisting components (i.e., shear walls or braced frames).

If the existing concrete slab is supported on steel framing, the most cost-effective means of providing sufficient diaphragm chord capacity is to ensure adequate shear transfer of the diaphragm to the perimeter steel beam by adding drilled and grouted bolts, and to ensure adequate strength and stiffness capacity of the perimeter beam connections. If a new chord is being secured with drilled and grouted anchors to an existing diaphragm containing prestressing strands, drilling must be done very carefully to ensure that strands are not cut. When a portion of an existing diaphragm slab is removed to provide a new diaphragm chord and/or collector member, as well as new dowels for wall anchorage or shear transfer, this technique is recommended only for one-way slabs in the direction parallel to the slab span, because of the potential risk of gravity load failure of the retrofitted portion of the slab. For other conditions, a detail using new concrete above or below the slab is recommended.

(e) Strengthening techniques for inadequate shear or tensile capacity at openings. Deficient shear or tensile stress at diaphragm openings or plan irregularities in monolithic concrete slabs can be improved by:

- Reducing the local stresses by distributing the forces along the diaphragm by means of structural members beneath the slab, and made integral through the use of drilled and grouted bolts (FEMA 172, Figure 3.5.2.4 a);
- Increasing the capacity of the concrete by providing a new concrete topping slab in the vicinity of the opening and reinforcing with trim bars (FEMA 172, Figure 3.5.2.4 b);
- Removing the stress concentration by filling in the diaphragm opening with reinforced concrete as indicated for shear walls (similar to FEMA 172, Figure 3.1.2.2 c); and
- Reducing the shear stresses at the location of the openings by adding supplemental vertical-resisting components (i.e., shear walls or braced frames).

In existing reinforced concrete diaphragms with small openings or low diaphragm shear stress, the existing reinforcement may be adequate. If additional reinforcement is required, new trim bars probably will be the most cost-effective alternative if a new topping slab is required to increase the overall diaphragm shear capacity. Providing new structural steel or reinforced concrete elements requires analysis of the shear and the tensile forces around the opening. The tensile or compressive stresses in the new elements at the opening must be developed by shear forces in the connection to the existing slab. The new elements also must be extended beyond the opening a sufficient distance to transfer the tensile or compressive chord forces back into the existing slab in the same manner. Removing the stress concentration by filling in the opening may be a feasible alternative, provided that the functional requirements for the opening (e.g., stair or elevator

shaft or utility trunk) no longer exist or have been relocated.

(2) Poured gypsum diaphragms.

(a) Deficiencies. Poured gypsum diaphragms may be reinforced or unreinforced and have the same deficiencies as cast-in-place concrete diaphragms.

(b) Strengthening techniques for poured gypsum diaphragms. Strengthening techniques for deficiencies in poured gypsum diaphragms are similar to those listed for concrete diaphragms; however, the addition of a new horizontal bracing system may be the most effective strengthening alternative. Poured gypsum has physical properties similar to those of very weak concrete. Tables of allowable structural properties (i.e., shear, bond, etc.) are published in various building codes and engineering manuals. A typical installation is for roof construction using steel joists. Steel bulb tees, welded or clipped to the joists, span over several joists and support rigid board insulation on the tee flanges. Reinforced or unreinforced gypsum is poured on the insulation board to a depth of 2 or 3 inches (50 to 75 mm), embedding the bulbed stems of the tees. While use of the strengthening techniques discussed for reinforced concrete diaphragms (i.e., reinforced overlays, additional chord reinforcement, etc.) is technically feasible, application of these techniques generally is not practical because of the additional weight or low allowable stresses of gypsum. Since dead loads normally constitute a significant portion of the design loads for roof framing members, the addition of several inches (approximately 75 mm) of gypsum for a reinforced overlay probably will overstress the existing light steel framing. Similarly, the low allowable stresses for dowels and bolts will allow strengthening of only marginally deficient diaphragms. For these reasons, gypsum diaphragms found to have significant deficiencies may have to be removed and replaced with steel decking or may be strengthened with a new horizontal bracing system.

(3) Precast concrete diaphragms.

(a) Deficiencies. The principal deficiencies of precast or post-tensioned concrete planks, tees, or cored slabs are:

- Inadequate in-plane shear capacity of the connections between the adjacent units;
- Inadequate diaphragm chord or collector capacity; and
- Excessive in-plane shear stresses at diaphragm openings or plan irregularities.

(b) Strengthening techniques for inadequate connection shear capacity. Deficient in-plane shear capacity of connections between adjacent precast concrete planks, tees, or cored slabs can be improved by:

- Replacing and increasing the capacity of the existing connections by overlaying the existing diaphragm with a new reinforced concrete topping slab (FEMA 172, Figure 3.5.4.2); and

- Reducing the shear forces on the diaphragm by providing supplemental vertical-resisting components (i.e., shear walls or braced frames).

The capacity of an existing diaphragm composed of precast concrete elements (i.e., cored slabs, tees, planks, etc.) generally is limited by the capacity of the field connections between the precast elements. It may be possible to modify these connections for a moderate increase in diaphragm capacity; however, it usually is not feasible to develop the full shear capacity of the precast units except with an adequately doweled and complete poured-in-place connection. This usually is very costly. Overlaying the existing precast system with a new reinforced concrete topping is an effective procedure for increasing the shear capacity of the existing diaphragm. Because of the relatively low rigidity of the existing connections, the new topping should be designed to resist the entire design shear. Existing floor diaphragms with precast concrete elements may have a 2- or 3-inch (50 to 75 mm) poured-in-place topping with mesh reinforcement to compensate for the irregularities in precast elements, and such toppings may constitute an adequate diaphragm. Where mechanical connections between units exist along with a topping slab, the topping slab generally will resist the entire load (until it fails) because of the relative rigidities; therefore, the addition of mechanical fasteners generally is ineffective. Applying an additional topping slab over the existing slab may be prohibitive because of the additional gravity and seismic loads that must be resisted by the structure. For the above reasons, the most cost-effective alternative may be reducing the diaphragm shear forces through the addition of supplemental shear walls or braced frames.

(c) Strengthening techniques for inadequate chord or collector capacity. Deficient diaphragm chord capacity of precast concrete planks, tees, or cored slabs can be improved by:

- Providing a new continuous steel member above or below the concrete slab, and connecting the new member to the existing slab with bolts (FEMA 172, Figure 3.5.4.3);

- Removing the edge of the diaphragm and casting a new chord member integral with the slab; and

- Reducing the diaphragm chord forces by providing supplemental vertical-resisting components (i.e., shear walls or braced frames).

Providing a new steel chord member generally is the most cost-effective approach to rehabilitating a deficient diaphragm chord for precast concrete elements. When this approach is used, adequate shear transfer between the existing planks or slabs and the new chord member must be provided. Grouting under the new steel chord member may be necessary to accommodate uneven surfaces. Although typically more costly, casting a new chord into the diaphragm may be considered a viable alternative where the projection caused by a new steel chord member is unacceptable for architectural reasons. The second technique may be a feasible option only when the chord is required in the direction parallel to the precast elements. The third technique generally would be viable only if it is being considered to improve other deficient conditions.

(d) Strengthening techniques for excessive shear stresses at openings. Deficient diaphragm shear capacity at diaphragm openings or plan irregularities can be improved by:

- Reducing the local stresses by distributing the forces along the diaphragm by means of steel members beneath the slab, and made integral with the existing slab with drilled and grouted bolts (FEMA 172, Figure 3.5.2.4 a);

- Increasing the capacity by overlaying the existing slab with a new reinforced concrete topping slab with reinforcing trim bars in the vicinity of the opening (FEMA 172, Figure 3.5.2.4 b),

- Removing the stress concentration by filling in the diaphragm opening with reinforced concrete (similar to FEMA 172, Figure 3.5.2.4 c); and

- Reducing the shear stresses at the location of the openings by providing supplemental vertical-resisting components (i.e., shear walls or braced frames).

The relative merits for rehabilitating excessive shear stresses at openings in precast concrete planks, tees, or cored slabs are similar to those discussed for cast-in-place concrete diaphragms.

(4) Steel deck diaphragms.

(a) Deficiencies. The principal deficiencies in steel deck diaphragms are inadequate in-plane shear capacity, which may be governed by the capacity of the welding to the supports, or the capacity of the seam welds between the deck units; inadequate diaphragm chord capacity; and excessive in-plane shear stresses at diaphragm openings or plan irregularities.

(b) Strengthening techniques for inadequate shear capacity. Deficient in-plane shear capacity of steel deck diaphragms can be improved by:

- Increasing the steel deck shear capacity by providing additional welding;

- Increasing the deck shear capacity of unfilled steel decks by adding a reinforced concrete fill or overlaying a new topping slab for concrete-filled steel decks;

- Increasing the diaphragm shear capacity by providing a new horizontal steel bracing system under the existing diaphragm; and

- Reducing the diaphragm shear stresses by providing supplemental vertical-resisting elements to reduce the diaphragm span.

Steel decking, with or without an insulation fill (e.g., vermiculite or perlite), may be used as a diaphragm whose capacity is limited by the welding to the

supporting steel framing, and crimping or seam welding of the longitudinal joints of the deck units. The shear capacity of this type of diaphragm may be increased modestly by additional welding if the shear capacity of the existing welds is less than the allowable shear of the steel deck itself. Significant increases in capacity may be obtained by adding a reinforced concrete fill and shear studs welded to the steel framing through the decking. This procedure will require the removal of any insulation fill and the removal and replacement of any partitions and floor or roof finishes. The shear capacity of steel deck diaphragms supported on open-web joists often is limited by the lack of adequate connection from deck to shear wall or other vertical element. The lack of intermediate connectors between joists is common. Frequently, the joist bearing ends themselves are not well connected to transfer diaphragm shear. Addition of supplemental steel members connected to wall and diaphragm is illustrated in Figure 8-12. The capacity of steel decking with an existing reinforced concrete fill may be increased by adding a reinforced concrete overlay. Although this is an expedient alternative for increasing the shear capacity of an existing composite steel deck, providing adequate shear transfer to the vertical-resisting members or chord elements through the existing composite decking may require special details (e.g., additional shear studs). Since the addition of a concrete overlay will increase the dead weight of the structure, the existing members, connections, and foundation must be checked to determine whether they are capable of resisting the added loads. The above alternatives provide positive, direct methods for strengthening an existing steel deck diaphragm. Both alternatives require complete access to the top of the diaphragm, and the removal and replacement of partitions and floor finishes or roofing.

Topping over an existing concrete fill will change the finished floor elevation by several inches, and will therefore require a number of nonstructural adjustments to the new elevation (e.g., to stairs, elevators, floor electrical outlets, etc.).

1. New horizontal bracing. An additional alternative for strengthening steel decking without concrete fill is to add new horizontal bracing under the decking. Since steel decking generally is supported on structural steel framing, the existing framing with new diagonal members forms the horizontal-bracing system. The diaphragm shears are shared with the existing decking in proportion to the relative rigidity of the two systems. This alternative requires access to the underside of the floor or roof framing, and may require relocation of piping, ducts, or electrical conduit, as well as difficult and awkward connections to the existing framing. These costs must be weighed against the costs for a concrete overlay. It should be noted that this alternative may not be feasible for steel decking with a composite concrete fill because of the much greater rigidity of the existing composite diaphragm compared with that of the bracing system. For the bracing system to be effective in this case, the diaphragm shears would be distributed on the basis of the bracing system and the steel decking without the concrete fill (i.e., failure of the concrete fill in shear would be assumed to be acceptable). The new horizontal bracing system will require continuous chord or collector members to receive the bracing forces and transfer them to shear walls or other vertical-resisting elements. A tubular steel member is a preferred section for the new bracing members, as is the tee section for the chord or collector members connected to shear walls. Where existing construction does not permit the use

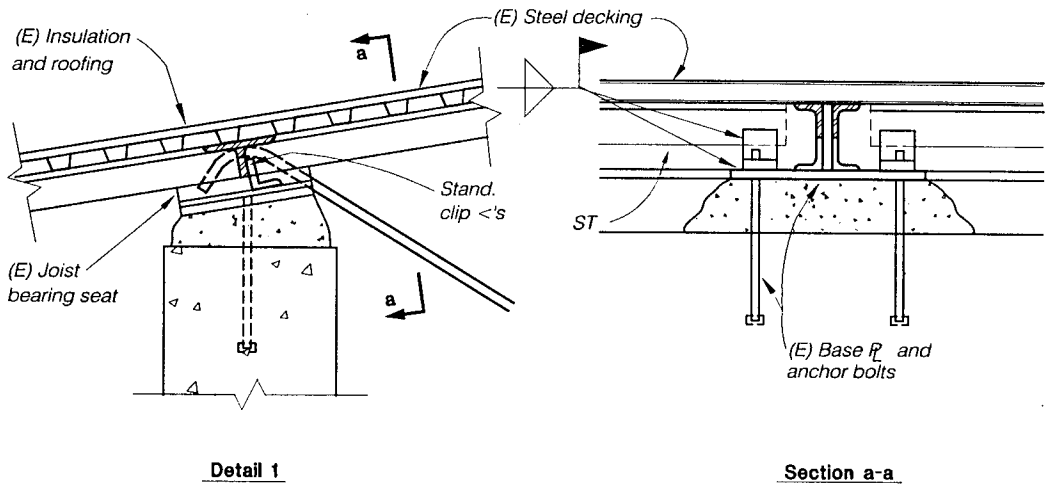

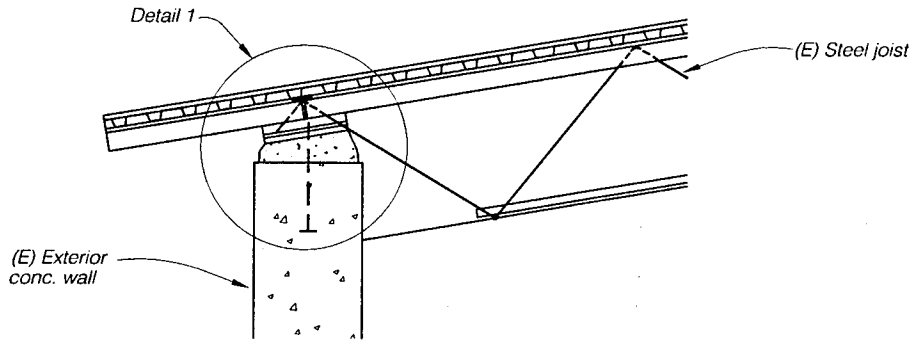

Figure 8-12. Providing Shear Transfer for Steel Decking on Steel Joists at Exterior Wall

of the tee section, an angle may be used. In the latter case, bending of the angle and prying action on the anchor bolts may need to be investigated.

2. Additional shear walls or vertical bracing. Reduction of the existing diaphragm stresses to acceptable levels by providing additional shear walls or vertical bracing also may be a feasible alternative. The choice between shear walls or bracing will depend on compatibility with the existing vertical-resisting elements (i.e., additional shear walls should be considered for an existing shear wall system and additional bracing for an existing bracing system). The appropriateness of this technique (as discussed above) depends on the extent to which new foundations will be required, and potential interference with the functional use of the building.

(c) Strengthening techniques for inadequate chord capacity. Deficient chord capacity of steel-deck diaphragms can be improved by:

- Increasing the chord capacity by providing welded or bolted continuity splices in the perimeter chord steel framing members (Figure 8-13);
- Increasing the chord capacity by providing a new continuous steel member on top or bottom of the diaphragm; and
- Reducing the diaphragm chord stresses by providing supplemental vertical-resisting elements (i.e., shear walls or braced frames) such that the diaphragm span is reduced.

Steel decking generally is constructed on steel framing. The perimeter members of the steel framing typically will have sufficient capacity to resist the diaphragm chord stresses, provided the shear capacity of the connections between the decking and the chord member and the tensile capacity of the steel framing connections are adequate to transfer the prescribed loads. Increasing the capacity of these connections by providing additional plug welds to the decking or adding steel shear studs in the case of concrete-filled metal decking may be required. The first technique generally is the most cost-effective. Increasing the chord capacity by providing a new steel chord member to the perimeter of the diaphragm would be appropriate only if it was impractical to use an existing member. If new concrete fill is to be added to increase the shear capacity of the steel decking, the chord requirements can be satisfied by designing reinforcements at the perimeter of the fill to resist the chord forces. Reducing the diaphragm chord stresses by providing supplemental shear walls or braced frames generally would not be cost-effective to correct a chord capacity problem, unless it is being seriously considered to improve other component deficiencies as well.

(d) Strengthening techniques for excessive shear stresses at opening. Excessive shear stresses at diaphragm openings or plan irregularities can be improved by:

- Reducing the local stress concentrations by distributing the forces into the diaphragm by means of steel drag struts (FEMA 172, Figure 2.2.2.4 b);

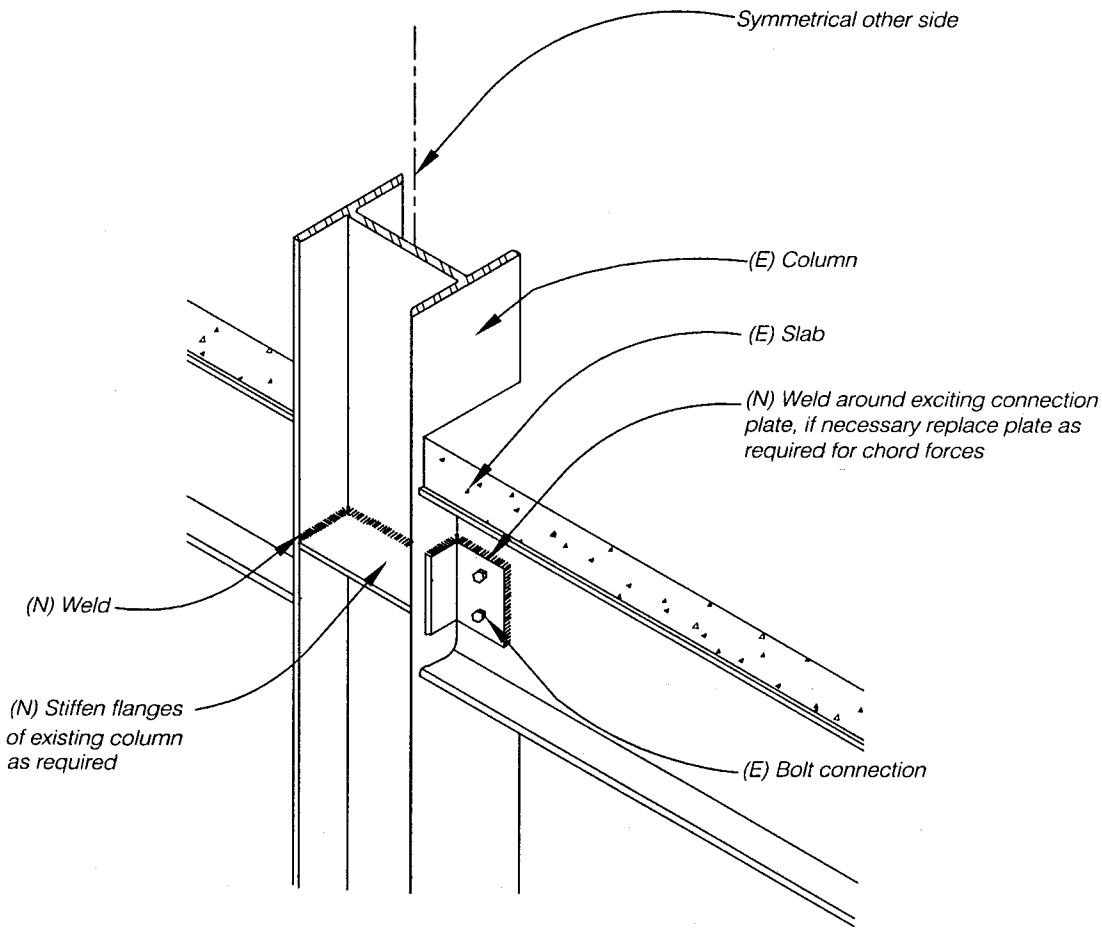

Figure 8-13. Modifying Simple Beam Connection to Provide Chord Tension Capacity

- Increasing the capacity of the diaphragm by reinforcing the edge of the opening with a steel-angle frame welded to the decking (similar to FEMA 172, Figure 3.5.2.4 a); and

- Reducing the diaphragm stresses by providing supplemental vertical-resisting elements (i.e., shear walls, braced frames, or new moment frames) such that the diaphragm span is reduced.

Openings and plan irregularities in steel deck diaphragms generally are supported along the perimeter by steel beams designed to support the gravity loads. If continuous past the corners of the openings or irregularities, these beams can distribute the concentrated stresses into the diaphragm, provided the capacity of the connections between the decking and the steel beams is adequate to transfer the prescribed loads. If inadequate, the connections can be reinforced by adding plug welds or shear studs. If beams are not continuous beyond an opening or irregularity, new beams can be provided to act as drag struts. Adequate connection of the new beams to the diaphragm and to the existing beams will be required to distribute loads.

Correcting the diaphragm deficiency by providing a steel frame around the perimeter of the opening or along the sides of the irregularity is similar to providing drag struts. The connection between the new steel members and the diaphragm must be sufficient to adequately distribute the local stresses into the diaphragm. The dimensions of the opening or irregularity will dictate whether this can be achieved solely with the use of a perimeter steel frame. Reducing the diaphragm stresses by providing supplemental shear walls or braced frames generally would not be cost-effective to correct a diaphragm opening deficiency unless it also was being considered to improve other component deficiencies.

(5) Timber diaphragms.

(a) Deficiencies. Timber diaphragms can be composed of straight-laid or diagonal sheathing or plywood. The principal deficiencies in the seismic capacities of timber diaphragms are:

- Inadequate shear capacity of the diaphragm;

- Inadequate chord capacity of the diaphragm;

- Excessive shear stresses at diaphragm openings or at plan irregularities; and

- Inadequate stiffness of the diaphragm resulting in excessive diaphragm deformations.

(b) Strengthening techniques for inadequate shear capacity. Deficient shear capacity of existing timber diaphragms can be improved by:

- Increasing the capacity of the existing timber diaphragm by providing additional nails or staples with due regard for wood-splitting problems;

- Increasing the capacity of the existing timber diaphragm by means of a new plywood overlay (Figure 8-14); and

- Reducing the diaphragm span through the addition of supplemental vertical-resisting elements (i.e., shear wall or braced frames).

Adding nails and applying a plywood overlay requires removal and replacement of the existing floor or roof finishes, as well as removal of existing partitioning, but is generally less expensive than adding new walls or vertical bracing. If the existing system consists of straight-laid or diagonal sheathing, the most effective alternative is to add a new layer of plywood, since additional nailing of the existing diaphragm typically is not feasible because of limited spacing and edge distance. Additional nailing is usually the least expensive alternative, but the additional capacity is still limited to the number and capacity of the additional nails that can be driven (i.e., with minimum allowable end distance, edge distance, and spacing). The additional capacity that can be developed by plywood overlays usually depends on the capacity of the underlying boards or plywood sheets to develop the capacity of the nails from the new overlay. Higher shear values are allowed for plywood overlay when adequate nailing and blocking (i.e., members with at least 2 inches [50 mm] of nominal thickness) can be provided at all edges where the plywood sheets abut. Adequate additional capacity for most timber diaphragms can be developed using this technique unless unusually large shears need to be resisted. When nailing into existing boards, care must be taken to avoid splitting. If boards are prone to splitting, pre-drilling may be necessary. The addition of shear walls or vertical bracing in the interior of a building may be an economical alternative to strengthening the diaphragms, particularly if the additional elements can be added without the need to strengthen the existing foundation. When additional bracing or interior shear walls are required, relative economy depends on the degree to which ongoing operations can be isolated by dust and noise barriers, and on the need for additional foundations.

(c) Strengthening techniques for inadequate chord capacity. Deficient diaphragm chord capacity can be improved by:

- Providing adequately nailed or bolted continuity splices along joists or fascia parallel to the chord (Figure 8-15);

- Providing a new continuous steel chord member along the top of the diaphragm (Figure 8-16); and

- Reducing the stresses on the existing chords by reducing the diaphragm's span through the addition of new shear walls or braced frames.

Simplified calculations to determine stresses in diaphragm chords conservatively consider the diaphragm as a horizontal beam and ignore the flexural capacity of the web of the diaphragm, as well as the effect of the perimeter shear walls that reduce the chord stresses. However, even though the chord requirements in some buildings may be overstated, in most buildings, a continuous structural element is required at diaphragm boundaries to collect the diaphragm shears and transfer them to the individual

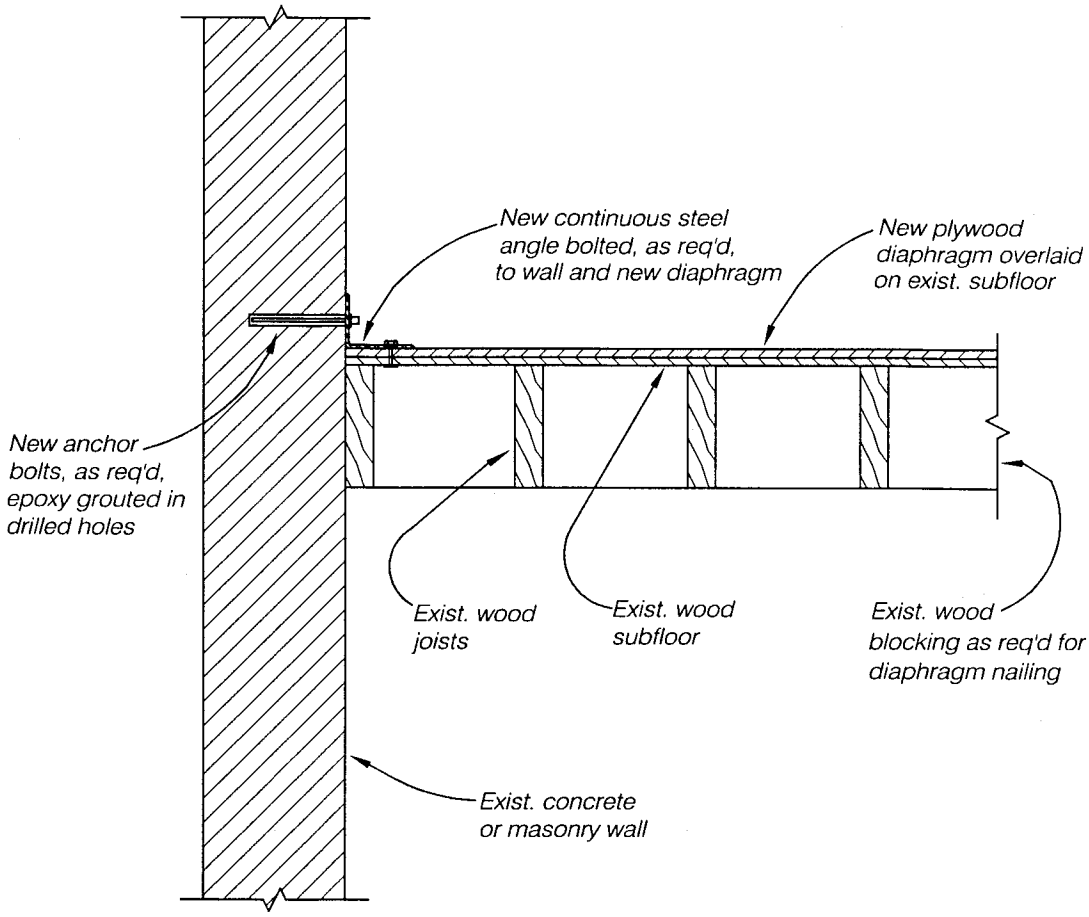

Figure 8-14. Strengthening of a Timber Diaphragm

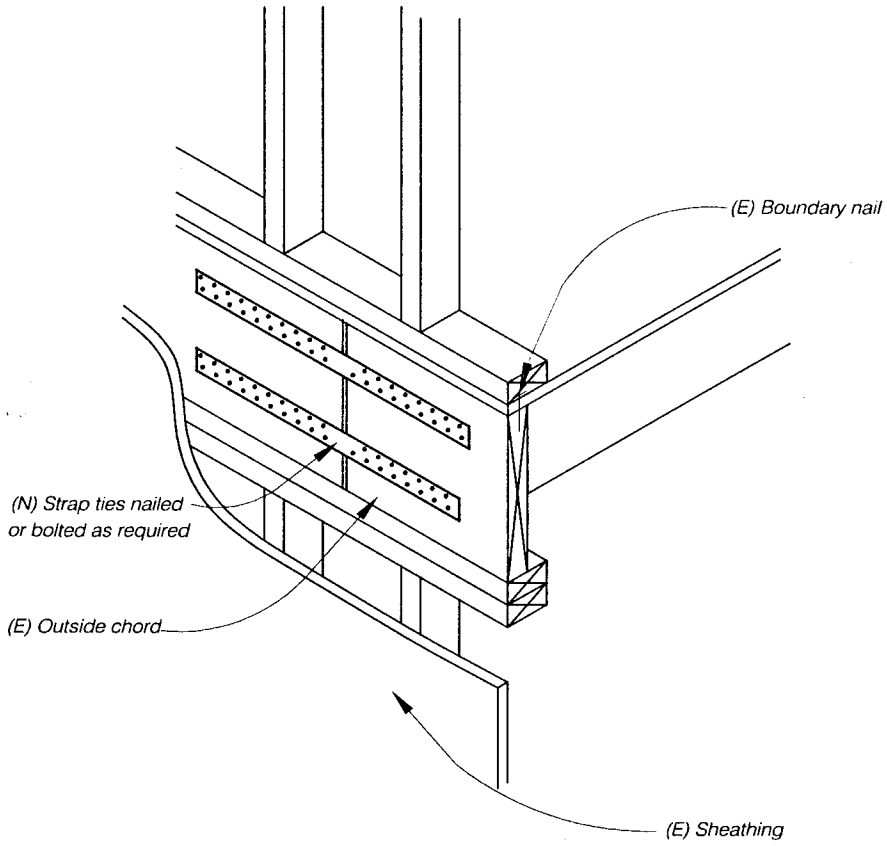

Figure 8-15. Chord Splice for Wood Diaphragm

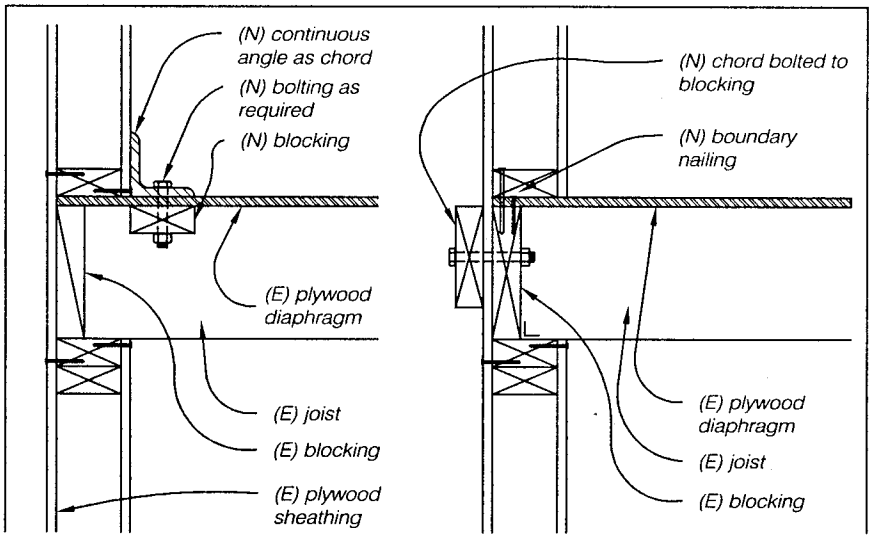

Figure 8-16. Providing New Chords for Wood Diaphragms

resisting shear walls along each boundary. A continuous steel member along the top of the diaphragm may be provided to function as a chord or collector member. For existing timber diaphragms at masonry or concrete walls, the new steel members may be used to provide wall anchorage, or as a chord or collector member for the diaphragm shear forces. The lack of adequate chord capacity is seldom the reason why new shear walls or braced frames would be considered to reduce the diaphragm loads. Reducing the diaphragm span and loads through the introduction of new vertical-resisting elements, however, may be considered to address other member deficiencies, and if so, the chord inadequacy problem may also be resolved.

(d) Strengthening techniques for excessive shear stresses at openings or plan irregularities.

Excessive shear stresses at diaphragm openings or other plan irregularities can be improved by:

- Reducing the local stresses by distributing the forces along the diaphragm by means of drag struts (FEMA 172, Figure 2.2.2.4 b);

- Increasing the capacity of the diaphragm by overlaying the existing diaphragm with plywood, and appropriate nailing of the plywood through the sheathing at the perimeter of the sheets adjacent to the opening or irregularity; and

- Reducing the diaphragm stresses by reducing the diaphragm spans through the addition of supplemental shear walls or braced frames.

The most cost-effective way to reduce large local stresses at diaphragm openings or plan irregularities is to install drag struts to distribute the forces into the diaphragm. Proper nailing of the diaphragm into the drag struts is required to ensure adequate distribution of forces. Local removal of roof or floor covering will be required to provide access for nailing. The analysis for the design of the drag strut and the required additional nailing is similar to that for the reinforcement of an opening in the web of a steel plate girder. The opening divides the diaphragm into two parallel horizontal beams, and the shear in each beam causes moment that induces tension or compression in the outer fibers of each beam. For small-opening or low-diaphragm shears, these bending forces may be adequately resisted as additional stresses in an existing diaphragm. For larger openings and/or larger diaphragms, tension or compression "flanges" may have to be developed at the opening. In a timber diaphragm, these "flanges" may be assumed to be the joists or headers that frame the opening, but to preclude distress due to stress concentration at the corners, the joists or headers must be continuous beyond the edge of the opening in order to transfer the flange forces back into the diaphragm by additional nailing. Applying a plywood overlay to increase the local diaphragm capacity, or providing supplemental vertical-resisting elements to reduce the local stresses generally will be viable alternatives only if they are being considered to correct other structural deficiencies.

(e) Strengthening techniques for inadequate stiffness. Excessive seismic displacement of an existing timber diaphragm can be prevented by:

- Increasing the stiffness of the diaphragm by the addition of a new plywood overlay; and

- Reducing the diaphragm span, thus reducing the displacements by providing new supplemental vertical-resisting elements such as shear walls or braced frames.

The addition of new shear walls or braced frames may be the most cost-effective alternative for reducing excessive displacements of plywood diaphragms (as is also the case for reducing excessive shear stresses as discussed above) if the additional elements can be added without strengthening the existing foundations, and when the existing functional use of the building permits it. The spacing of new vertical elements required to limit the deflection of straight or diagonal sheathing to prescribed limits may be too close to be feasible. In these cases, overlaying with plywood may be the most cost-effective alternative. It should be noted that the Special Procedure for URM bearing wall buildings identifies flexibility as the primary diaphragm deficiency, and special "cross walls" are prescribed rather than diaphragm strengthening to reduce deflections.

(6) Horizontal steel bracing. Existing horizontal steel bracing systems may be in the plane of the roof or floor framing (e.g., rod tension bracing or light angles using some of the framing members as chords or compression sheets, or in the case of existing roof trusses, existing bracing may occur to provide lateral support for the lower chord. New bracing may be installed in a similar manner, but for some existing systems, such as open-web joist framing, it is usually easier to install the new bracing below the lower chord of the joists. In any event, for either new or existing bracing to resist seismic forces, there must be a positive and direct path to transfer the floor or roof inertia forces to the bracing, and from the bracing to the walls or other vertical-resisting elements.

(a) Deficiency. The principal deficiency in horizontal steel bracing systems is inadequate force capacity of the members (i.e., bracing and floor or roof beams) and/or the connections.

(b) Strengthening techniques for inadequate bracing systems. Deficient horizontal steel bracing system capacity can be improved by:

- Increasing the capacity of the existing bracing members, or removing and replacing them with new members and connections of greater capacity;

- Increasing the capacity of the bracing system by adding new horizontal bracing members to previously unbraced panels (if feasible);

- Increasing the capacity of the bracing system by adding a steel deck diaphragm to the floor system above the steel bracing; and

- Reducing the stresses in the horizontal bracing system by providing supplemental vertical-resisting components (i.e., shear walls or braced frames).

Horizontal bracing systems to resist wind or earthquake forces have been in common use for many years in steel-framed industrial buildings. These bracing systems generally are integrated with the existing floor or roof framing systems, and the capacity of the bracing system generally is governed by the diagonal braces and their connections. If the structural analysis indicates that the existing floor or roof-framing members in the bracing systems do not have adequate capacity for the seismic loads, providing additional bracing or other lateral-load-resisting elements may be a cost-effective alternative to strengthening these members. Simple strengthening techniques include increasing the capacity of the existing braces and their connections (e.g., single-angle bracing could be doubled, double-angle bracing could be "starred"[i.e., two pairs of angles back-to-back]) as well as removing existing braces and replacing them with stronger braces and connections. The existing connections must be investigated, and if found to be inadequate, the connections will need to be strengthened. Providing horizontal braces in adjacent unbraced panels, if present, may be a very cost-effective approach to increasing the horizontal load capacity. Existing horizontal bracing systems often do not have an effective floor diaphragm, and a new floor or roof diaphragm consisting of a reinforced concrete slab or steel decking with or without concrete fill can be provided to augment or replace the horizontal bracing systems. A steel deck diaphragm may be designed to augment the horizontal bracing, but a concrete slab probably would make the bracing ineffective because of the large difference in rigidities. The concrete slab therefore would need to be designed to withstand the entire lateral load. As with other diaphragms, it may be possible to reduce diaphragm stresses to acceptable limits by providing additional shear walls or vertical bracing. Unlike true diaphragm systems, however, a horizontal bracing system may not have been designed with the same shear capacity at any section (e.g., a simple bracing system between two end walls may have increasing shear capacity from the center towards each end). In some cases, additional vertical-resisting elements can increase the stresses in some of the elements of the existing bracing systems.

g. Foundations. Deficient foundations occasionally are a cause for concern with respect to the seismic capacity of existing buildings. Because the foundation loads associated with seismic forces are transitory and of very short duration, allowable soil stresses for these loads, combined with the normal gravity loads, may be permitted to approach ultimate stress levels. Where preliminary analysis indicates that there may be significant foundation problems, recommendations from a qualified geotechnical engineer should be requested to establish rational criteria for the foundation analysis.

(1) Continuous or strip footings.

(a) Deficiencies. The principal deficiencies in the seismic capacity of existing continuous or strip wall footings are:

- Excessive soil-bearing pressure due to overturning forces; and
- Excessive uplift conditions due to overturning forces.

(b) Strengthening techniques for excessive soil-bearing pressure. The problem of

excessive soil-bearing pressure caused by seismic overturning forces can be mitigated by:

- Decreasing the soil-bearing pressure by underpinning and enlarging the footing at each end (FEMA 172, Figure 3.6.1.2a);

- Increasing the vertical capacity of the footing by adding new drilled piers adjacent and connected to the existing footing (FEMA 172, Figure 3.6.1.2 b);

- Increasing the soil-bearing capacity by modifying the existing soil properties; and

- Reducing the overturning forces by providing supplemental vertical-resisting elements (i.e., shear walls or braced frames).

The most effective procedure for correcting excessive soil pressure due to seismic overturning forces is to provide a drilled pier on each side and at each end of the wall. The reinforced concrete piers should be cast-in-place in uncased holes so as to develop both tension and compression. Each pier should extend above the bottom of the footing and be connected by a reinforced concrete "needle" beam through the existing wall above the footing. The above techniques are costly and disruptive. For this reason, when seismic upgrading results in increased forces that require foundation strengthening, it may be cost-effective to consider other seismic upgrading schemes. Soil conditions may be such that modifying the capacity of existing soils is the most viable alternative. The soil beneath structures founded on clean sand can be strengthened through the injection of chemical grouts. The bearing capacity of other types of soils can be strengthened by compaction grouting. With chemical grouting, chemical grout is injected into clean sand in a regular pattern beneath the foundation. The grout mixes with the sand to form a composite material with a significantly higher bearing capacity. With compaction grouting, grout also is injected in a regular pattern beneath the foundation, but it displaces the soil away from the pockets of injected grout rather than dispersing into the soil. The result of the soil displacement is a densification of the soil, and hence, increased bearing capacity. Some disruption of existing floors adjacent to the subject foundations may be required in order to cut holes needed for uniform grout injection. Alternatively, seismic forces on the footing can be reduced by adding other vertical-resisting components such as bracing, shear walls, or buttresses.

(c) Strengthening techniques for excessive uplift conditions. Deficient capacity of existing foundations to resist prescribed uplift forces caused by seismic overturning moments can be improved by:

- Increasing the uplift capacity of the existing footing by adding drilled piers or soil anchors (FEMA 172, Figure 3.6.1.2b); and

- Reducing the uplift forces by providing supplemental vertical-resisting elements (i.e., shear walls or braced frames).

Any seismic rehabilitation alternative that requires significant foundation work will be costly. Access for heavy equipment (e.g., drilling rigs, backhoes, and pile drivers), ease of material handling, and the need to minimize the disruption of the functional use of the building are a few of the reasons why exterior foundation rehabilitation work will be significantly less costly than interior work. Providing a significant increase in the uplift capacity of an existing foundation generally is most effectively achieved by adding drilled piers or soil anchors. Reinforced concrete piers can be provided adjacent to the footing and connected to the existing footing with steel or concrete beams. Locating the piers symmetrically on both sides of the footing will minimize connections that must transfer eccentric loads. The details for eccentric connections may not always be feasible; however, providing concentric drilled piers almost ensures that interior foundation work will be needed. Soil anchors similar to those used to tie-back retaining walls also can be used instead of drilled piers. Hollow core drill bits from 4 inches to 2 feet (100 mm to 0.6 m) in diameter can be used to drill the needed deep holes. After drilling, a deformed steel tension rod is placed into the hole through the center of the bit. As the bit is withdrawn, cement grout is pumped through the stem of the bit, bonding to the tension rod and the soil. These types of soil anchors can provide significant tensile capacity. Drilling rigs are available that can drill in the interior of buildings even with low headroom; however, this is more costly. As with other rehabilitation techniques, reducing the overturning forces by providing additional vertical-resisting components such as braced frames, shear walls, or buttresses may be viable. The addition of buttresses may transfer loads to the exterior of the building, where foundation work may not be so costly. Some engineers believe that uplifting of the ends of rigid shear walls is not a deficiency, and may actually be beneficial in providing a limit to the seismic base shear. Others design the structure for the overturning forces but ignore the tendency of the foundation to uplift. If the foundations are permitted to uplift, the engineer must investigate the redistribution of forces in the wall and in the soil due to the shift in the resultant soil pressure, and also the potential distortion of structural and nonstructural elements framing into the wall.

(2) Individual pier or column footings.

(a) Deficiencies. The principal deficiencies in the seismic capacity of existing individual pier or column footings are:

- Excessive soil-bearing pressure due to overturning forces;
- Excessive uplift conditions due to overturning forces; and
- Inadequate friction and passive soil pressure to resist lateral loads.

(b) Strengthening techniques for excessive bearing pressure. The problem of excessive soil-bearing pressure due to overturning forces can be mitigated by:

- Increasing the bearing capacity of the footing by underpinning the footing ends and providing additional footing area (FEMA 172, Figure 3.6.1.2a);

- Increasing the vertical capacity of the footing by adding new piers drilled through the existing footing (Figure 8-17);

- Reducing the bearing pressure on the existing footings by connecting adjacent footings with deep reinforced concrete tie beams;

- Increasing the soil-bearing capacity by modifying the existing soil properties; and

- Reducing the overturning forces by providing supplemental vertical-resisting components (i.e., shear walls or braced frames).

The considerations in selecting alternatives to correcting excessive soil-bearing pressure due to overturning forces in individual pier or column footings are similar to those discussed above for continuous or strip footings. Underpinning existing footings to increase the bearing area is an ancient technique that is still employed because of its simplicity. The end result is brick or concrete underpinning under the existing footing. The new bearing area is increased by extending the underpinning down and out at 45 degrees from the bottom edge of the footing. The work is generally done progressively in quadrants or smaller sections, and preloaded by jacking to minimize settlement (FEMA 172, Figure 3.6.1.2a). The second alternative presumes that the existing footing is large enough to accommodate four drilled piers of about 1 foot (0.3 m) in diameter. The third alternative of tying adjacent footings together with a deep reinforced concrete beam may be a feasible means of distributing the forces resulting from the overturning moment to adjacent footings.

(c) Strengthening techniques for excessive uplift conditions. Deficient capacity of existing foundations to resist the prescribed uplift forces caused by seismic overturning moments can be improved by:

- Increasing the uplift capacity of the existing footing by adding drilled piers or soil anchors (similar to Figure 8-17);

- Increasing the uplift capacity by providing a new deep reinforced concrete beam to mobilize the dead load on an adjacent footing; and

- Reducing the uplift forces by providing supplemental vertical-resisting components (i.e., shear walls or braced frames).

The first technique is similar to the second technique described in the previous paragraph to reduce excessive bearing pressure. The drilled piers can be designed to provide additional bearing and uplift capacity. For uplift capacity, a reinforced concrete overlay may be required to resist the flexural stresses in the footing. If the drilled piers are for uplift only, the diameter may be smaller (i.e., 4 to 6 inches [100 to 150 mm]) if a post-tensioned soil anchor is used for the uplift resistance. The second technique is also similar to the third technique in the previous paragraph, and is used here as a feasible means for:

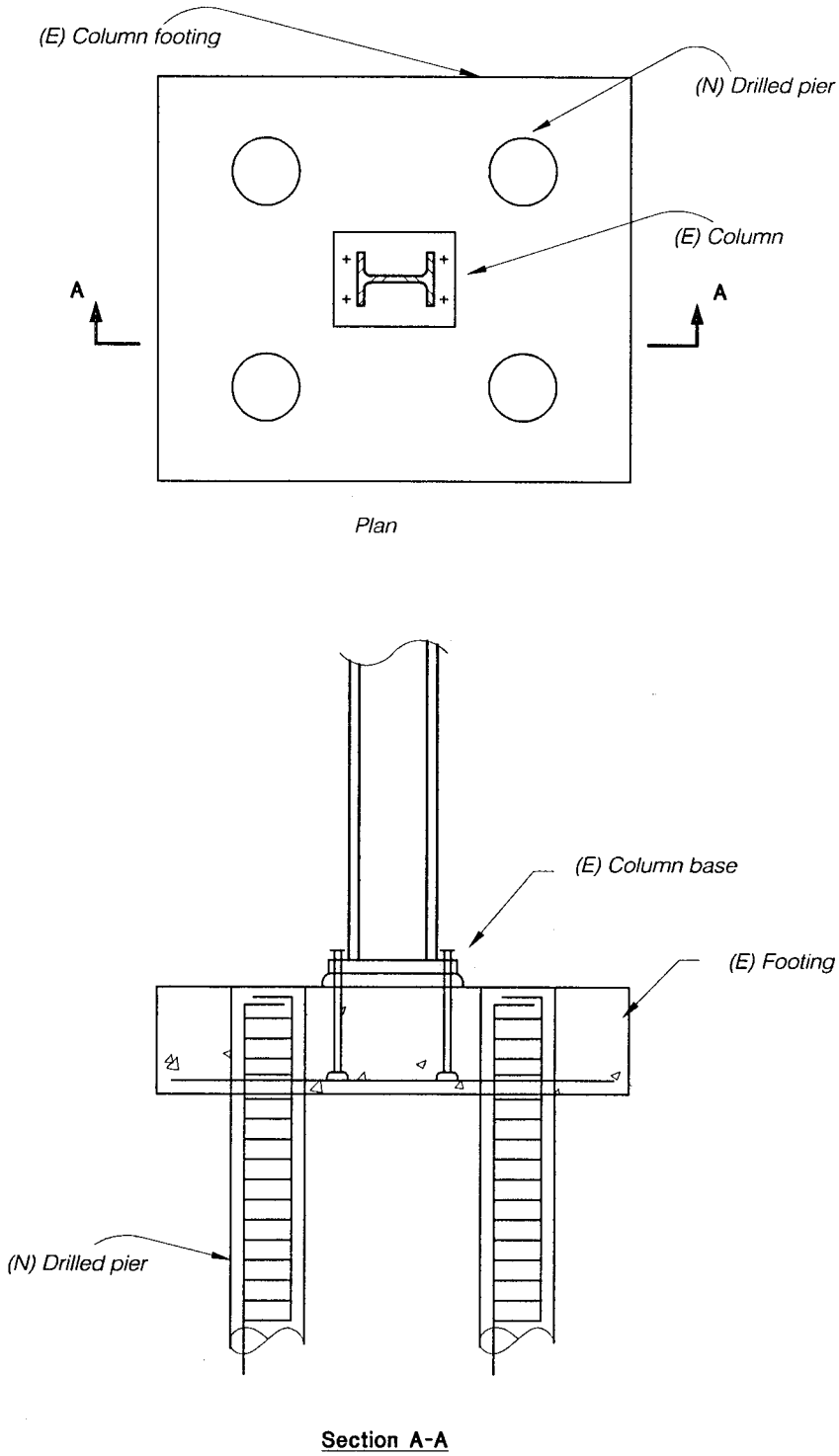

Figure 8-17. Strengthening an Existing Spread Footing

mobilizing the existing mass supported by an adjacent footing.

(d) Strengthening techniques for inadequate passive pressure. The problem of excessive passive soil pressure caused by seismic loads can be mitigated by:

- Providing an increase in vertical bearing area by enlarging the footing;
- Providing an increase in vertical bearing area by adding new tie beams between existing footings;
- Improving the existing soil conditions adjacent to the footing to increase the allowable passive pressure; and
- Reducing the bearing pressure at overstressed locations by providing supplemental vertical-resisting components such as shear walls or braced frames at selected locations.

As noted above, foundation rework generally is relatively costly. The foundation strengthening technique that is the most cost-effective generally is the technique that can resolve more than one concern. The addition of a new deep tie beam between adjacent footings, if required to resist overturning forces, will likely address inadequate passive soil pressure concerns. As the above discussion indicates, the most cost-effective alternative to the strengthening of an existing foundation usually is not readily apparent. Several alternative schemes may have to be developed to the point where reasonable cost estimates can be made to evaluate the tangible costs (i.e., the total actual work that needs to be accomplished), as well as the architectural considerations and the disruption or relocation of an on-going function. The third alternative provides the same results as enlarging the footing and can be very cost-effective if the foundations are accessible for in-situ strengthening of the soil (e.g., construction of vane-mixed soil/cement piers adjacent to the footing. As indicated above, the second alternative will distribute loads between foundation elements, as well as provide additional surface area to mobilize passive pressure. In specific situations, the other alternatives may be more cost-effective, depending upon accessibility, as well as the impact each alternative may have on the ongoing functional use of the building.

(3) Piles or drilled piers.

(a) Deficiencies. The two principal deficiencies in the seismic capacity of piles or drilled piers are:

- Excessive tensile or compressive loads on the piles or piers due to seismic forces combined with gravity loads;
- Inadequate capacity to transfer tensile forces to the pile or pier cap; and
- Inadequate lateral-force capacity to transfer the seismic shears to the soil.

(b) Strengthening techniques for excessive vertical force. The deficient tensile or compression capacity of piles or piers can be improved by one or more of the following techniques:

- Increasing the capacity of the foundation by removing the existing pile cap, driving additional piles, and providing new pile caps of larger sizes (FEMA 172, Figure 3.6.3.2); and

- Reducing the load on overstressed piles by distributing the seismic forces to adjacent pile caps with deep tie beams.

Although it may be possible to drive additional piles to correct the deficiency, it is usually very difficult to utilize the existing pile cap to distribute the loads effectively to both old and new piles. It may be necessary to consider temporary shoring of the column, or other structural members supported by the pile caps, or that the pile caps can be removed and replaced with a new pile cap that will include the new piles. The use of deep tie beams to distribute seismic overstressing forces is similar to that discussed above for spread footings.

(c) Strengthening techniques for excessive lateral forces. The deficient lateral-force capacity of piles or piers can be improved by one or more of the following:

- Reducing the loads on overstressed pile caps by adding tie beams to distribute the loads to adjacent pile caps;

- Increasing the allowable soil pressure adjacent to the pile cap by improving the soil;

- Increasing the capacity of the foundation by removing the existing pile cap, driving additional piles, and providing a pile cap of larger size (FEMA 172, Figure 3.6.3.2); and

- Reducing the load on the piles or piers by providing supplemental vertical-resisting components (i.e., braced frames or shear walls) to transfer the forces to other foundation elements with reserve capacity.

Damage to concrete piles or piers (particularly that resulting from shear fracture) is unacceptable and should be avoided. Transfer of seismic shear forces to the soil at the pile cap level, rather than by the piles or piers, is preferable. Thus, the first two alternatives, which are similar to those described above for spread footings, are also preferred for pile caps.

(4) Mat foundations.

(a) Deficiencies. Seismic deficiencies in mat foundations are not common; however, the following deficiencies can occur:

- Inadequate moment capacity to resist combined gravity plus seismic overturning forces;

- Inadequate passive soil pressure to resist sliding; and

- Inadequate capacity to resist hydrostatic uplift pressure due to groundwater.

(b) Strengthening techniques for inadequate moment capacity. Deficient mat foundation moment capacity due to concentrated loads can be corrected by increasing the mat capacity locally by providing additional reinforced concrete (i.e., an inverted column capital) doweled and bonded to the existing mat to act as a monolithic section. If the inadequacy is due to concentrated seismic overturning loads, it may be possible to provide new shear walls on the mat to distribute the overturning loads, and also to locally increase the section modulus of the mat.

(c) Strengthening technique for inadequate lateral resistance. Deficient mat foundation lateral resistance (e.g., the possibility of a mat sliding when founded at shallow depth in the soil) can be corrected by the construction of properly spaced shear keys at the mat perimeter. The shear keys would be constructed by trenching around the perimeter of the mat to provide concrete buttresses with a base extending below the bottom of the mat.

(d) Strengthening technique for excessive hydrostatic pressure. Excessive hydrostatic pressure can be resisted by providing internal soil anchors for the mat. This can be accomplished by drilling and casing holes through the mat and into the soil below. A high-strength steel rod is placed in the hole and anchored by grouting in the soil below the casing. After post-tensioning, the rod is grouted in the casing and anchored to a bearing plate on the mat. If the groundwater is seasonal, the technique can be implemented during the dry season, when the groundwater is below mat level. If the groundwater is not seasonal, it would need to be lowered temporarily with well points to permit drilling through the mat.

8-3. Rehabilitation Techniques for Connections

a. Diaphragm connections. Seismic inertial forces originate in all elements of buildings and are delivered through structural connections to horizontal diaphragms. The diaphragms distribute these forces to vertical components that transfer the forces to the foundation. An adequate connection between the diaphragm and the vertical components is essential to the satisfactory performance of any structure. The connections must be capable of transferring the in-plane shear stress from the diaphragms to the vertical elements, and of providing support for out-of-plane forces on the vertical elements. The following types of diaphragms are discussed below: concrete, precast concrete, steel deck without concrete fill, steel deck with concrete fill, and timber.

(1) Connections of concrete diaphragms.

(a) Deficiencies. The principal deficiencies of the connections of concrete diaphragms to vertical-resisting elements such as shear walls or braced frames are:

- Inadequate in-plane shear transfer capacity; and
- Inadequate anchorage capacity for out-of-plane forces in the connecting walls.

(b) Strengthening techniques for in-plane shear wall connections. Deficient in-plane shear transfer capacity of a diaphragm to a shear wall or braced frame can be improved by:

- Reducing the local stresses at the diaphragm-to-wall interface by providing collector members or drag struts under the diaphragm, and connecting them to the diaphragm and the wall (FEMA 172, Figure 3.5.4.3); and

- Reducing the shear stresses in the existing connection by providing supplemental vertical-resisting elements.

Inadequate in-plane shear capacity of connections between concrete diaphragms and vertical-resisting elements usually occurs where large openings in the diaphragm exist adjacent to the shear wall (e.g., at stairwells or an exterior wall with discontinuous shear piers between full-height window openings) or where the shear force distributed to interior shear walls or braced frames exceeds the capacity of the connection to the diaphragm. If the walls and the diaphragm have sufficient capacity to resist the prescribed loads, the addition of collector members is likely to be the most cost-effective alternative. As previously discussed, reducing the forces in the deficient connection by providing supplemental vertical-resisting components is not likely to be the most cost-effective alternative (due to the probable need for new foundations and drag struts) unless it is being considered to correct other component deficiencies.

(c) Strengthening techniques for out-of-plane anchorage capacity. Deficient out-of-plane anchorage capacity of concrete diaphragm connections to concrete or masonry walls can be improved using one or both of the following techniques:

- Increasing the capacity of the connection by providing additional dowels grouted into drilled holes; and/or

- Increasing the capacity of the connection by providing a new member above or below the slab connected to the slab and the wall with drilled and grouted bolts similar to that indicated for providing a new diaphragm chord (FEMA 172, Figure 3.5.4.3).

The most cost-effective alternative generally is to provide additional dowels grouted into drilled holes. The holes are most efficiently drilled from the exterior through the wall and into the slab. Access to the exterior face of the wall is obviously required. When the exterior face is not accessible (e.g., when it abuts an adjacent building), providing a new member connected to the existing wall and slab is likely to be preferred.

(2) Connections of poured gypsum diaphragms.

(a) Deficiencies. The principal deficiencies of poured gypsum diaphragms are similar to those for concrete diaphragms:

- Inadequate in-plane shear transfer capacity; and

- Inadequate anchorage capacity for out-of-plane forces in the connecting walls.

(b) Strengthening techniques for poured gypsum diaphragms. If the gypsum diaphragm is supported by the shear wall, it will be possible to improve the in-plane shear transfer by providing new dowels from the diaphragm into the shear wall. Alternative strengthening techniques for the deficiencies also include removal of the gypsum diaphragm and replacement with steel decking, or the addition of a new horizontal bracing system designed to resist all of the seismic forces. Allowable structural stresses for gypsum are very low, and the additional strengthening that can be achieved is very limited. Further, the typical framing details (e.g., steel joist, bulb tee, and insulation board) are such that it is difficult to make direct and effective connections to the gypsum slab. For these reasons, the techniques involving removal and replacement, or a new horizontal bracing system, are likely to be the most cost-effective solutions, except when the existing diaphragm is only marginally deficient.

(3) Connections of precast concrete diaphragms.

(a) Deficiencies. The principal deficiencies of the connections of precast concrete diaphragms to the vertical-resisting elements are:

- Inadequate in-plane shear transfer capacity; and

- Inadequate anchorage capacity at the exterior walls for out-of-plane forces.

(b) Strengthening techniques for precast concrete diaphragm connections. Deficient shear transfer or anchorage capacity of a connection of a precast concrete diaphragm to a concrete or masonry wall or a steel frame can be improved by:

- Increasing the capacity of the connection by providing additional dowels placed in drilled and grouted holes;

- Increasing the capacity of the connection by providing a reinforced concrete overlay that is bonded to the precast units and anchored to the wall with additional dowels placed in drilled and grouted holes;

- Providing a supplemental connection element, such as a steel angle, bolted to the diaphragm and the wall or welded to the steel frame; and

- Reducing the forces at the connections by providing supplemental vertical-resisting components.

Precast concrete plank or tee floors that have inadequate connection capacity for transferring in-plane shear to vertical elements such as shear walls or braced frames can be strengthened by drilling intermittent holes in the precast units at the vertical element. When the floors are supported on steel framing, welded inserts (or studs) can be added and

the holes grouted. When the floors are supported on concrete or masonry units, dowels can be inserted and grouted into the drilled holes. If the diaphragm contains prestressing strands, extreme care must be taken prior to drilling to avoid cutting the strands. A more costly alternative is to provide a reinforced concrete overlay that is bonded to the precast units, and additional dowels grouted into holes drilled in the wall. This will require the stripping of the existing floor surface and raising the floor level by 2 to 3 inches, which will necessitate adjusting of nonstructural elements to the new floor elevations (e.g., stairs, doors, electrical outlets, etc.). Providing a supplemental steel connection element (similar to Figure 3.5.4.3 in FEMA 172) may be a cost-effective alternative that can provide in-plane and out-of-plane additional connection capacity. As previously discussed, reducing the shear forces in the deficient connection by providing supplemental vertical-resisting components is not likely to be the most cost-effective alternative (due to the probable need of new foundations and drag struts) unless it is being considered to correct other component deficiencies. This alternative also is not effective in reducing the out-of-plane forces unless the new vertical-resisting elements can be constructed so as to form effective buttresses for the existing walls.

(4) Connections of steel deck diaphragms without concrete fill.

(a) Deficiencies. For steel deck diaphragms without concrete fill, the principal deficiencies of their connections to the vertical-resisting elements such as shear walls, braced frames, or moment frames are:

- Inadequate in-plane shear capacity; and

- Inadequate anchorage capacity for out-of-plane forces in walls.

(b) Strengthening techniques for steel deck connections. Deficient shear transfer or anchorage capacity of a connection of a steel deck diaphragm to a shear wall, braced frame, or moment frame can be improved by:

- Increasing the capacity of the connection by providing additional welding at the vertical element;

- Increasing the capacity of the connection by providing additional anchor bolts;

- Increasing the capacity of the connection by providing concrete fill over the deck with dowels grouted into holes drilled into or through the wall;

- Increasing the capacity of the connection by providing new steel members to effect a direct transfer of diaphragm shears to a shear wall or steel frame; and

- Reducing the local stresses by providing additional vertical-resisting components, such as shear walls, braced frames, or moment frames.

Steel decking is typically supported by metal framing, by steel angles, or by channel ledgers bolted to concrete or masonry walls. If the deficiency is in the connection and not the diaphragm, the most cost-effective alternative is to increase the welding of the decking to the steel member or ledger to at least the capacity of the diaphragm. If supported by a ledger, the capacity of the ledger connections to the concrete or masonry wall also may have to be improved, this is most effectively done by providing additional bolts in drilled and grouted holes (Figure 8-18). If the decking is being reinforced by filling with reinforced concrete, the most effective alternative will be to drill and grout dowels into the adjacent concrete or masonry wall and lap with reinforcing steel in the new slab. In some cases, it may be feasible to use the existing steel support member at the wall as a collector. The capacity of the existing decking can be increased by additional welding to the ledger angle and the addition of a reinforced concrete fill. Reinforcement dowels are welded to the angle that functions as a collector member, and the shear forces are transferred to the wall by the existing and new anchor bolts, as required. Steel deck roof diaphragms may be supported on open-web steel joists that rest on steel bearing plates at the top of concrete or masonry walls. In existing buildings that have not been properly designed for resisting lateral loads, there may not be a direct path for the transfer of diaphragm shears to the vertical walls, particularly when the decking span is parallel to the wall. New steel elements, as indicated in Figure 8-12, can be provided between the joists for direct connection to the decking. A continuous member also can be provided to function as a chord or collector member. As noted above, strengthening a steel deck diaphragm connection to the vertical-resisting component is effective only if the body of the diaphragm has adequate capacity to resist the design lateral forces. If the diaphragm does not have adequate capacity, it needs to be strengthened. As previously discussed, reducing the shear transfer forces in the deficient connection by providing supplemental vertical-resisting components is not likely to be the most cost-effective alternative (due to the probable need of new foundations and drag struts) unless it is being considered to correct other component deficiencies. Further, in order to reduce out-of-plane wall forces, the new vertical components would be required to act as buttresses to the existing walls.

(5) Connections of steel deck diaphragms with concrete fill.

(a) Deficiencies. The principal deficiencies of a connection of a steel deck diaphragm with concrete fill to the vertical-resisting component, such as shear walls, braced frames, or moment frames, are the in-plane shear capacity, or anchorage capacity for out-of-plane forces in walls.

(b) Strengthening techniques for steel deck connections. Deficient shear capacity or anchorage capacity of a connection of a steel-deck diaphragm to a shear wall, braced frame, or moment frame can be improved by:

- Increasing the shear capacity by drilling holes through the concrete fill, and providing additional shear studs welded to the vertical elements through the decking;

- Increasing the capacity of the connection by providing additional

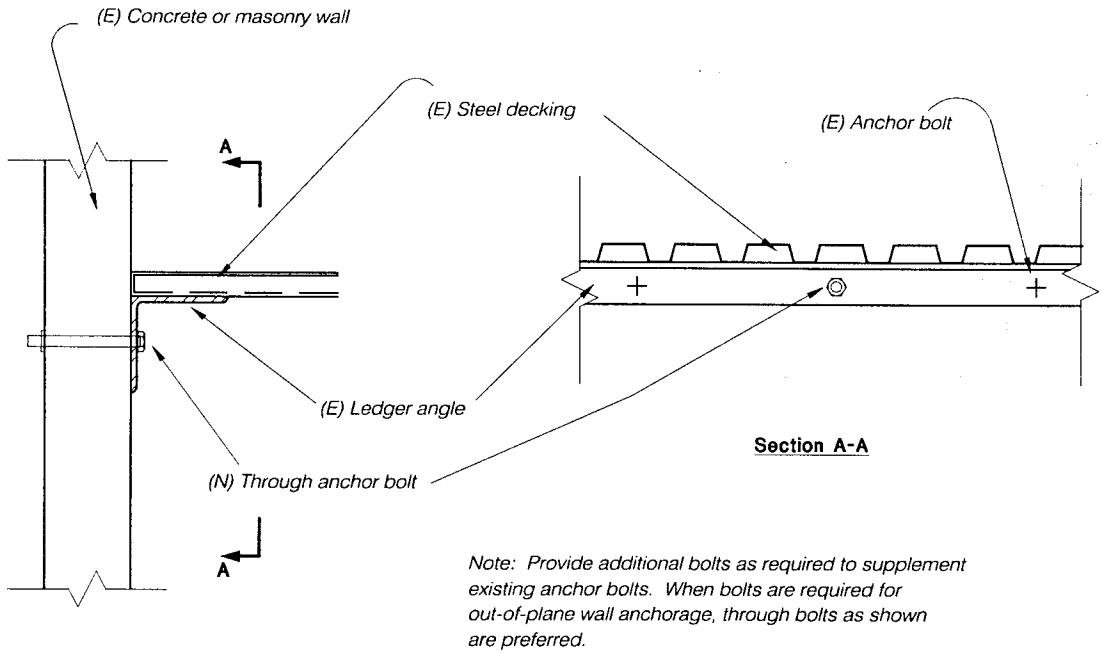

Figure 8-18. Strengthening Steel Decking Support for Shear Transfer and Wall Anchorage

anchor bolts (drilled and grouted) connecting the steel support to the wall (Figure 8-18);

- Increasing the capacity of the connection by providing additional dowels between the existing wall and diaphragm slab; and

- Reducing the local stresses by providing additional vertical-resisting components such as shear walls, braced frames, or moment frames.

If the deficiency is in both the connection of the diaphragm to the ledger and the ledger to the shear wall, the most cost-effective alternative may be to provide a direct-force transfer from the slab to the wall by installing dowels. This is accomplished by removing the concrete to expose the diaphragm slab reinforcement, drilling holes in the wall, laying in dowels, and grouting and reconstructing the diaphragm slab. If the deficiency is in the deck-to-supporting steel member connection, the first technique is preferred. If the deficiency is in the steel ledger to the wall connection, the second technique is preferred. Figure 8-18 illustrates a technique for strengthening a steel deck diaphragm connection to a concrete or masonry wall. In this figure, it is assumed that the existing decking with concrete fill has adequate capacity for the design loads, but the connection to the wall is deficient for in-plane shear and out-of-plane anchorage forces. In the figure, the in-plane shear is assumed to be transferred from the decking to the existing ledger angle with additional welding (if required). Supplementary bolts are installed to connect the ledger angle to the wall for the required in-plane and out-of-plane capacity. When the decking is spanning parallel to the wall, new steel straps, welded to the ledger angle and to the underside of the decking, can provide the additional out-of-plane anchorage capacity. When the new dowels or anchor bolts are to be attached to existing thin concrete walls (e.g., precast tees or other thin-ribbed concrete sections), through-bolts or threaded rods are required to provide adequate anchorage or doweling to the diaphragm. If the vertical-resisting elements are steel-braced frames or steel moment frames, the increase in connection capacity obviously would be achieved through additional welding and supplemental reinforcing members, as required.

(6) Connections of horizontal steel bracing.

(a) Deficiencies. The two primary deficiencies in the connection capacity of horizontal steel braces to vertical-resisting components such as shear walls or braced frames are:

- Inadequate in-plane shear transfer capacity; and

- Inadequate anchorage capacity when supporting concrete or masonry walls for out-of-plane forces.

(b) Strengthening techniques for in-plane shear transfer capacity. Deficient shear transfer of connections of horizontal steel bracing systems to shear walls or braced frames can be improved by:

- Increasing the capacity by providing larger or more bolts or by welding; and

- Reducing the stresses by providing supplemental vertical-resisting components such as shear walls or braced frames.

The first alternative of providing larger or more bolts between the horizontal brace members and the concrete or masonry shear wall, or providing additional welding when connecting to a steel-braced frame, generally will be the most cost-effective. This alternative assumes that the individual member connections at the joints of the bracing system are adequate, and only the connections to the shear walls or braced frames are deficient. Collectors along the wall may be required to distribute the concentrated brace shear along the wall to allow for adequate bolt spacing. As previously discussed, reducing the forces in the deficient connection by providing supplemental vertical-resisting components is not likely to be the most cost-effective alternative, unless it is being considered to correct other component deficiencies.

(c) Strengthening techniques for out-of-plane anchorage. Deficient out-of-plane anchorage capacity of connections between horizontal steel bracing systems and concrete or masonry shear walls can be improved by increasing the capacity of the connection by providing additional anchor bolts grouted in drilled holes, and by providing more bolts or welding to the bracing members.

(7) Connections in timber diaphragms.

(a) Deficiencies. The principal connection deficiencies in timber diaphragms are:

- Inadequate capacity to transfer in-plane shear at the connection of the diaphragm to interior shear walls or vertical bracing;

- Inadequate capacity to transfer in-plane shear at the connection of the diaphragm to exterior shear walls or vertical bracing; and

- Inadequate out-of-plane anchorage at the connection of the diaphragm to exterior concrete or masonry walls.

(b) Strengthening techniques for internal shear wall connections. Deficient shear transfer capacity of a diaphragm at the connection to an interior shear wall or braced frame can be improved by:

- Increasing the shear transfer capacity of the diaphragm local to the connection by providing additional nailing to existing or new blocking, and additional bolting to the wall or frame (similar to FEMA 172, Figures 3.7.1.2 a and 3.7.1.2 b);

- Reducing the local shear transfer stresses by distributing the forces from the diaphragm by providing a collector member to transfer the diaphragm forces to the shear wall; and

- Reducing the shear transfer stress in the existing connection by providing

supplemental vertical-resisting elements.

If the shear transfer deficiency is governed by the existing nailing, the most cost-effective alternative probably will be to provide additional nailing; however, stripping of the flooring or roofing surface is required. If it is not feasible to provide adequate additional nailing within the length of the shear wall, the installation of a collector probably will be the most cost-effective alternative. If the nailing of the diaphragm to the new blocking is inadequate to transfer the desired shear force over the length of the shear wall, a drag strut or collector member should be provided, and the new blocking extended as a required beyond the end of the shear wall. The shear force is collected in the drag strut and transferred to the shear wall with more effective nailing or bolting. The new lumber must be dimensionally stable and cut to size. Providing additional vertical-resisting elements usually involves construction of additional interior shear walls or exterior buttresses. This alternative generally is more expensive than the other two because of the need for new foundations and for drag struts or other connections to collect the diaphragm shears for transfer to the new shear walls or buttresses.

(c) Strengthening techniques for in-plane shear transfer capacity to exterior walls. Deficient in-plane shear transfer capacity of a diaphragm to exterior shear walls or braced frames can be improved by:

- Increasing the capacity of existing connections by providing additional nailing and/or bolting;
- Reducing the local shear transfer stresses by distributing the forces from the diaphragm by providing chords or collector members to collect and distribute shear from the diaphragm to the shear wall or bracing; and
- Reducing shear stress in the existing connections by providing supplemental vertical-resisting components.

Inadequate in-plane shear transfer capacity at an exterior shear wall typically is a deficiency when large openings along the line of the wall exist. In this case, the shear force to be resisted per unit length of wall may be significantly greater than the shear force per unit length transferred from the diaphragm by the existing nailing or bolting. If the diaphragm and the shear walls have adequate shear capacity, the solution requires transfer of the diaphragm shear to a collector member for distribution to the discontinuous shear walls. For timber shear walls parallel to the joists, the exterior joist usually is doubled-up at the exterior wall and extended as a header over openings. This doubled joist can be spliced for continuity and used as drag strut with shear transfer to the wall by means of metal clip anchors and nails or lag screws. If the resulting unit shears in the walls on either side of the opening are larger than the existing shear transfer capacity of the roof diaphragm (e.g., in this case, the capacity is governed by the existing nailing to the perimeter blocking or double joists), a collector member is required to collect the diaphragm shears and transfer them, at a higher shear stress, to the shear walls. For steel frame buildings with discontinuous braced panels, the spandrel supporting

the floor or roof framing may be used as a chord or collector member. For discontinuous masonry, concrete, or precast concrete shear walls parallel to the joists, the sheathing typically is nailed to a joist, or ledger-bolted to the wall. The joist or ledger can be spliced for continuity and supplementary bolting to the shear wall provided as required. For shear walls perpendicular to the joists, the sheathing may be nailed to discontinuous blocking between the ends of the joists. In this case, the chord or collector member may have to be provided on top of the diaphragm. This new member may be a continuous steel member bolted to the wall and nailed or lag screwed, with proper edge distance, to the diaphragm, and also could be designed to provide out-of-plane anchorage with welded steel straps nailed to the diaphragm. As discussed above with respect to interior wall connection deficiencies, providing additional vertical-resisting components is likely to be the most costly alternative, unless it is being considered to correct other component deficiencies.

(d) Strengthening techniques for inadequate out-of-plane anchorage. Deficient out-of-plane anchorage capacity of wood diaphragms connected to concrete or masonry walls with wood ledgers can be improved by:

- Increasing the capacity of the connection by providing steel straps connected to the wall (using drilled and grouted bolts or through-bolts for masonry walls), and bolted or lagged to the diaphragm or roof or floor joists (FEMA 172, Figures 3.7.1.4 a and 3.7.1.4 b);
- Increasing the capacity of the connections by providing a steel anchor to connect the roof or floor joists to the walls (FEMA 172, Figures 3.7.1.4 c and 3.7.1.4 d); and
- Increasing the redundancy of the connection by providing continuity ties into the diaphragm.

An important condition to be addressed in retrofitting any existing heavy walled structure with a wood diaphragm is the anchorage of the walls for out-of-plane forces. Prior to the mid-1970s, it was common construction practice to bolt a 3x (75 mm) ledger to a concrete or masonry wall; install metal joist hangers to the ledger; drop in 2x (50 mm) joists; and sheath with plywood. The plywood that lapped the ledger would be nailed into the ledger, providing both in-plane and out-of-plane shear transfer. The 1971 San Fernando earthquake caused many of these connections to fail. Out-of-plane forces stressed the ledgers in their weak cross-grain axis and caused many of them to split, allowing the walls to fall out and the roof to fall in. When retrofitting a masonry or concrete structure, this condition should be remedied by providing a positive connection between the concrete or masonry wall and wood diaphragm. The first two techniques are, in general, equally cost-effective. In addition to correcting the ledger concerns, continuity ties need to be provided between diaphragm chords in order to distribute the anchorage forces well into the diaphragm. Joist hangers and glulam connections frequently have no tensile capacity, but this tensile capacity can be provided by installing tie rods bolted to adjacent joist or glulam framing (FEMA 172, Figure 3.7.1.4 e). These continuity ties provide a necessary redundancy in the

connection of heavy-walled structures to timber diaphragms.

b. Foundation connections. Seismic inertial forces originate in all elements of buildings and are delivered through structural connections to horizontal diaphragms. The diaphragms distribute these forces to vertical components that transfer the forces to the foundation, and the foundation transfers the forces into the ground. An adequate connection between the vertical components and the foundation is essential to the satisfactory performance of a strengthened structure. The connections must be capable of transferring the in-plane lateral inertia forces from the vertical components to the foundations, and of providing adequate capacity for resisting uplift forces caused by overturning moments.

(1) Connections of cast-in place concrete walls.

(a) Deficiencies. The principal deficiency in the connection of cast-in-place cement walls to the foundation is inadequate development length in the dowels for the vertical reinforcement ("starter" bars).

(b) Strengthening techniques for inadequate development length in the foundation dowels are:

- Provide adequate confinement in the lap area to make existing development lengths effective;
- Provide new boundary members at each end of the wall;
- Expose and lap-weld reinforcement; and
- Permit bond slip of reinforcement, and induce "yield" stress based on actual development length.

Development lengths for reinforcement can be reduced to the minimum values prescribed in ACI 318 with adequate confinement of other concrete. This can be achieved by casting a bolster (i.e., 3 or 4 inches of reinforced concrete) on each side of the wall in the lap area at each end of the wall, and providing transverse cross-ties through the existing wall. As indicated for shear walls in paragraph 8-2a(1)(c), the use of fiber-reinforced polymer (FRP) sheets to provide confinement in walls may be a possibility, but consensus guidelines for this application are currently unavailable. New boundary members, with vertical reinforcement properly anchored to the foundation, are an effective means to compensate for inadequate development lengths in the existing reinforcement. The boundary members will substantially increase the rigidity of the wall and will affect the distribution of the story shears. Lap welding of the reinforcement can be very effective if the reinforcement, when exposed, is in close contact. For double-curtain reinforcement, the reinforcement is exposed and welded only on one side for each curtain.

(2) Connections of precast concrete shear walls.

(a) Deficiencies. The principal deficiencies of the connections of precast concrete shear walls to the foundation are:

- Inadequate capacity to resist in-plane or out-of-plane shear forces; and

- Inadequate uplift capacity to resist seismic overturning forces.

(b) Strengthening techniques for inadequate shear capacity. Deficient shear capacity of the connections of precast shear walls to the foundation can be improved by:

- Increasing the capacity of the connection by adding a new steel member connecting the wall to the foundation or the ground-floor slab.

Early precast concrete wall construction frequently had minimal lateral connection capacity at the foundation. These connections usually can be strengthened most economically by attaching a steel member to the wall and the floor slab or foundation with drilled and grouted anchors or expansion bolts. Care must be taken to place bolts and/or dowels a sufficient distance away from concrete edges to prevent spalling under load. Figure 3.8.3.2 in FEMA 172 illustrates one option for this technique. In regions of low seismicity, the new steel angle with anchorage to the ground floor slab may be adequate. For more significant lateral forces, the steel plate alternative in Figure 8-19 provides a stronger and more positive connection.

(c) Strengthening techniques for inadequate hold-down capacity. Deficient hold-down capacity of the foundation can be improved by:

- Increasing the hold-down capacity by adding a bolted steel plate as indicated in Figure 8-19 at each end of the wall.

- Reducing the uplift forces by providing supplemental vertical-resisting components such as shear walls or braced frames.

Deficient hold-down capacity of precast units usually will occur when one unit or a part of one unit is required to resist a significant share of the seismic load. If the wall has sufficient bending and shear capacity, then increasing the hold-down capacity using the first technique is usually the most cost-effective. When a wall is composed of a number of solid (i.e., no significant openings) precast panels, the overturning forces generally will be minimal, provided there is adequate vertical shear capacity in the connections between the edges of adjacent panels. In this case, the connections must be checked, and if necessary, strengthened. The second technique usually is a viable approach only if it is being considered to correct other component deficiencies. When excessive uplift forces are due to inadequate vertical shear capacity in the vertical connections between adjacent precast units, strengthening of those connections will reduce the uplift forces.

(3) Connections of braced frames.

(a) Deficiencies. The principal deficiencies of the connections of steel braced frames to the foundation are:

- Inadequate shear capacity; and

- Inadequate uplift resistance.

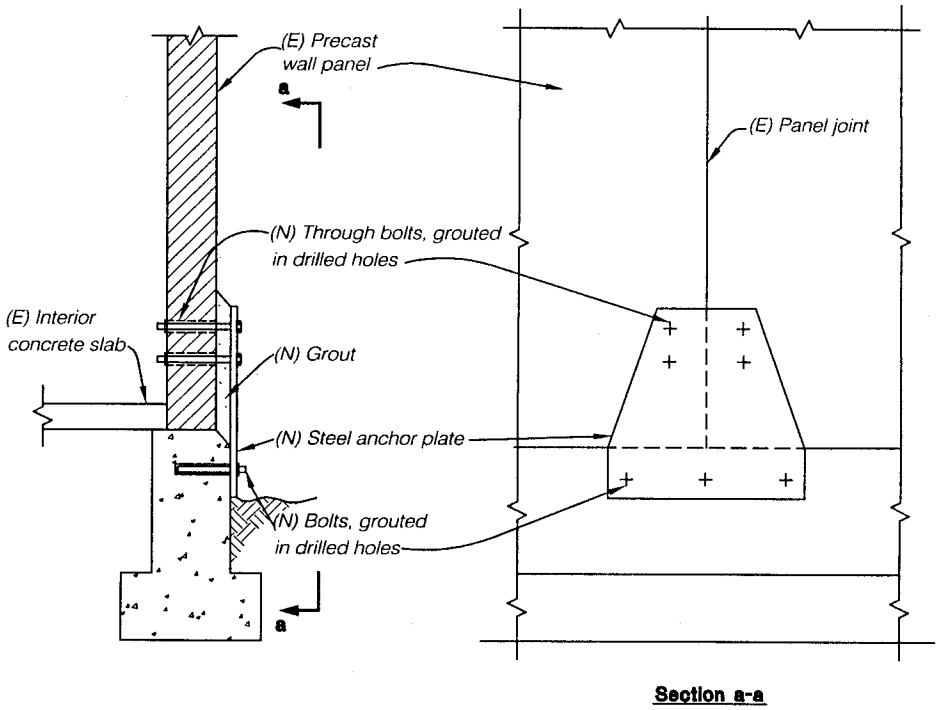

Figure 8-19. Steel Plate Anchorage for Precast Concrete Wall Panels

(b) Strengthening techniques for inadequate shear capacity. Deficient shear capacity of the connections of steel-braced frames to the foundations can be improved by:

- Increasing the capacity by providing new steel members welded to the braced-frame base plates, and anchored to the slab or foundation with drilled and grouted anchor bolts (Figure 8-20); and

- Reducing the shear loads by providing supplemental steel-braced frames.

The first alternative generally will be the most cost-effective, provided the existing slab or foundation can adequately resist the prescribed shear. Steel collectors welded to the existing steel base plates can distribute the shear forces into the slab or foundation. If the existing foundation requires strengthening to provide adequate shear capacity, determining the most cost-effective alternative requires comparing the effort necessary to construct a reinforced concrete foundation to the effort and disruption of functional space required to install supplementary shear walls and their associated foundations and collectors.

(c) Strengthening techniques for inadequate uplift resistance. Deficient uplift resistance capacity of the connections of steel-braced frames to the foundations can be improved by:

- Increasing the capacity by providing new steel members welded to the base plate and anchored to the existing foundation (Figure 8-20); and

- Reducing the uplift loads by providing supplemental steel-braced frames.

Inadequate uplift resistance capacity of a steel-braced frame seldom results just because of deficient connection to the foundation, but is typically a concern reflecting the uplift capacity of the foundation itself. If the foundation is the concern, the techniques discussed in paragraph 8-2g can be considered to correct the problem. If, in fact, the deficiency is the connection, providing new connecting members will be the most economical.

(4) Connection of steel moment frames.

(a) Deficiencies. The principal deficiencies of the connection of a moment frame column to the foundation are:

- Inadequate shear capacity;

- Inadequate flexural capacity; and

- Inadequate uplift capacity.

(b) Strengthening techniques for inadequate shear, flexural, or uplift capacity. The techniques for strengthening steel moment frame column base connections to improve shear and flexural capacity also will likely improve the uplift capacity. For this reason, a combination of the following alternatives may be utilized to correct a deficient column base connection:

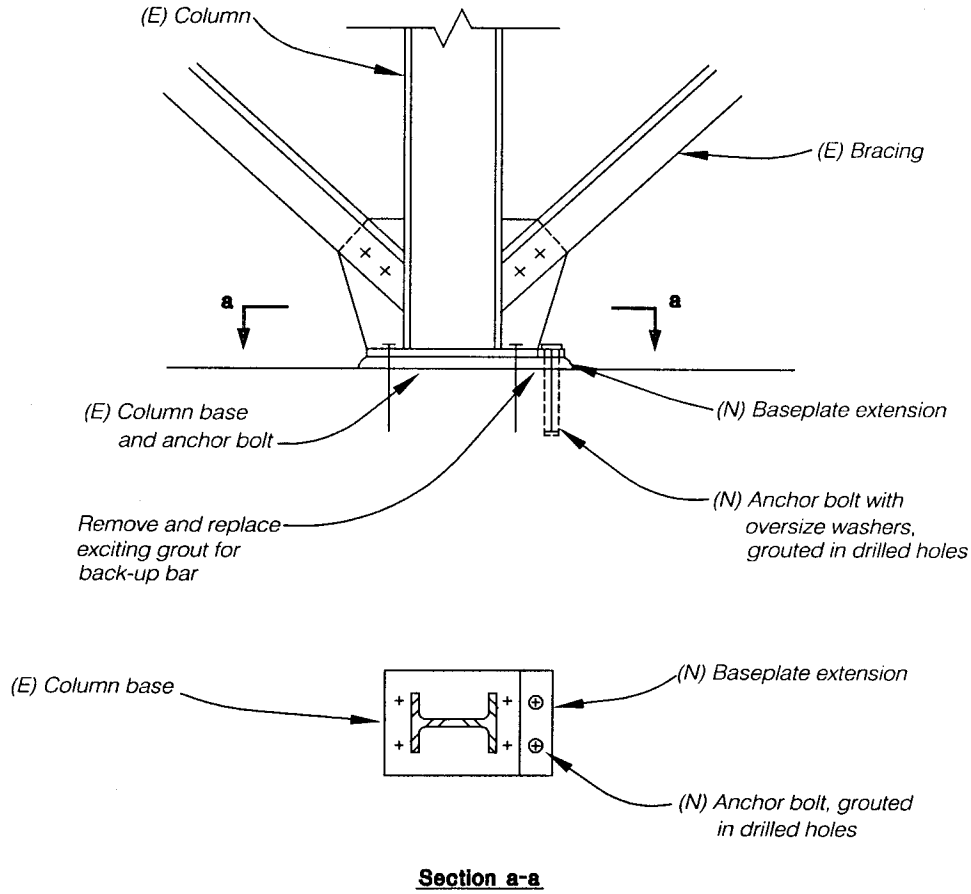

Figure 8-20. Strengthening of a Column Base Plate in a Braced Frame

- Increasing the shear and tensile capacity by enlarging the base plate and installing additional anchor bolts into the foundation (Figure 8-20); and

- Increasing the shear capacity by embedding the column in a reinforced concrete pedestal that is bonded or embedded into the existing slab or foundation.

If the above deficiencies occur only in the column base connection, it is possible to strengthen the connection by enlarging and stiffening the base plate and adding additional anchor bolts. If the column base connection is embedded in a monolithic concrete slab, the slab may be considered for distribution of the shear to the ground by means of any additional existing footings that are connected to the slab. If the column is not embedded in the slab, the same effect can be achieved by adding a concrete pedestal. The interference of this pedestal with the function and operations of the area is an obvious drawback.

8-4. Rehabilitation with Protective Systems

a. General. Although protective systems (i.e., seismic isolation or energy dissipation) can be efficiently used for new construction, most of the installations in the present decade have been used to retrofit existing buildings. The advantages of these systems, for suitable candidate buildings, is that significant reduction in the seismic demand can be achieved, thereby minimizing the structural rehabilitation and functional disruption to the existing building. Seismic isolation has been successfully utilized in the seismic retrofit of historic buildings where other retrofit procedures would have altered the historic structural fabric of the building.

b. Seismic isolation. The design of a seismic isolation system depends on many factors, including the period of the fixed-base structure, the period of the isolated structure, the dynamic characteristics of the soil at the site, the shape of the input response spectrum, and the force-deformation relationship for the particular isolation device. The primary objective of the design is to obtain a structure such that the isolated period of the building is sufficiently longer than both the fixed-base period of the building (i.e., the period of the superstructure), and the predominant period of the soil at the site. In this way, the superstructure can be decoupled from the maximum earthquake input energy. The spectral accelerations at the isolated period of the building are significantly reduced from those at the fixed-base period. The resultant forces on structural and nonstructural elements of the superstructure will be significantly reduced when compared with conventional fixed-base design. The benefits resulting from base isolation are attributed primarily to a reduction in spectral acceleration demand due to a longer period, as discussed in this paragraph. Additional benefits may come from a further reduction in the spectral demand attained by supplemental damping provided by high-damped rubber components or lead cores in the isolation units. Guidelines for the selection and design of these systems are provided in TI 809-04. Figures 8-2, 8-3, and 8-4 in that document indicate the potential reduction in seismic demand for buildings with initial fundamental periods of 0.3, 0.7, and 1.2 secs., founded on these different soil profiles and retrofitted with an isolation period of 2.5 secs. The isolators generally are installed immediately

above the foundation level, and a rigid diaphragm or horizontal bracing system is necessary above the isolators to provide displacement compliance for the structural elements (i.e., columns or walls) above the isolators. The anticipated maximum displacement of the isolators must be accommodated by flexible and/or expansion joints in all utility services, stairs, and ramps entering the building, and by a structural gap or moat around the perimeter of the building. Rehabilitation with base isolation will concentrate most of the construction work at the base of the building; however, most existing buildings in which this technique has been utilized have also required some measure of structural rehabilitation in the building above the isolators. Base isolation is significantly more expensive than simple structural rehabilitation, but its use has been justified by minimizing disruption of function, precluding rehabilitation of historic structural features, and protection of fragile nonstructural components or essential equipment.

c. Energy dissipation. These systems are designed to provide supplemental damping in order to reduce the seismic input forces. Most conventional buildings are designed assuming 5% equivalent viscous damping for structures responding in the elastic range. For structures that include viscous dampers or metallic yielding devices, the equivalent viscous damping may be increased to between 15% and 25%, depending on the specific characteristics of the device. In this way, seismic input energy to the structure is largely dissipated through the inelastic deformations concentrated in the devices, reducing damage to other critical elements of the building. The benefits resulting from the use of displacement-dependent or velocity-dependent energy dissipation devices are attributed primarily to the reduction in spectral demand due to supplemental damping provided by the devices. Unlike seismic isolation, where structural alterations can be essentially confined to the base of an existing building, these systems require that the energy dissipation devices be distributed throughout the building. Guidelines for the selection and design of energy dissipation systems are provided in Chapter 8 of TI 809-04. Figures 8-5 and 8-6 in that document indicate the potential reduction in seismic demand for the same three buildings described in paragraph 8-4b above, as the effective damping is increased from 5 percent to 20 percent. The effectiveness of these devices is dependent on the relative displacement and/or velocity of the two ends of each device; therefore, these devices are not generally effective for shear wall buildings or reinforced concrete frames with limited ductility.

CHAPTER 9
REHABILITATION STRATEGIES AND TECHNIQUES FOR NONSTRUCTURAL SYSTEMS

9-1. General

A general set of alternative methods is available for the rehabilitation of nonstructural components. These methods are briefly outlined in the following paragraphs, in approximate order of their cost and effectiveness, together with examples of each to clarify the intent of this classification. The choice of rehabilitation technique and its design is, however, the province of the design professional, and the use of alternative methods to those noted below or otherwise customarily in use is acceptable, provided it can be shown that the acceptance criteria can be met.

a. Replacement. Replacement involves the complete removal of the component and its connections, and its replacement by new components: for example, the removal of exterior cladding panels, the installation of new connections, and installation of new panels. As with structural components, the criteria for the installation of new nonstructural components as part of a seismic rehabilitation project will be the same as for new construction.

b. Strengthening and stiffening. Strengthening or stiffening involves additions to the component to improve its strength or stiffness to meet the required force or displacement levels: for example, secondary bracing could be installed between a structural brace and a support to prevent buckling.

c. Repair. Repair involves the repair of any damaged parts or members of the component, to enable the component to meet its acceptance criteria: for example, some corroded attachments for a precast concrete cladding system might be repaired or replaced without removing or replacing the entire panel system.

d. Bracing. Bracing involves the addition of members and attachments that brace the component internally, and/or to the building structure. A suspended ceiling system might be rehabilitated by the addition of diagonal wire bracing and vertical compression struts.

e. Attachment. Attachment refers to methods that are primarily mechanical, such as bolting, by which nonstructural components are attached to the structure or other supporting components. Typical attachments are the bolting of items of mechanical equipment to a reinforced concrete floor or base. Supports and attachments for mechanical and electrical equipment should be designed according to good engineering principals. The following guidelines are recommended:

(1) Attachments and supports transferring seismic loads should be constructed of materials suitable for the application, and designed and constructed in accordance with FEMA 302.

(2) Attachments embedded in concrete should be suitable for cyclic loads.

(3) Rod hangers may be considered seismic supports if the length of the hangar from the supporting structure is 12 inches or less. Rod hangars

should not be constructed in a manner that would subject the rod to bending moments.

(4) Seismic supports should be constructed so that support engagement is maintained.

(5) Friction clips should not be used for anchorage attachment.

(6) Expansion anchors should not be used for mechanical equipment rated over 10 hp, unless undercut expansion anchors are used.

(7) Drilled and grouted-in-place anchors for tensile load applications should use either expansive cement or expansive epoxy grout.

(8) Supports should be specifically evaluated if weak-axis bending of cold-formed support steel is relied on for the seismic load path.

(9) Components mounted on vibration isolation systems should have a bumper restraint or snubber in the vertical and each horizontal direction. The design force should be taken as $2F_p$.

(10) Oversized washers should be used at bolted connections through the base sheet metal if the base is not reinforced with stiffeners.

Lighting fixtures resting in a suspended ceiling grid may be rehabilitated by adding wires that directly attach the fixtures to the floor above, or to the floor structure to prevent their falling.

9-2. Rehabilitation Criteria for Nonstructural Components

The acceptance criteria for the rehabilitation of existing nonstructural components shall be in compliance with the provisions of Chapter 6 of FEMA 302. Design and detailing of new structural supports, bracing, and attachments for nonstructural components shall be in accordance with the applicable provisions of FEMA 302.

9-3. Rehabilitation Techniques for Nonstructural Architectural Components

a. General. Nonstructural architectural components must be supported and/or braced to resist the seismic inertia forces defined in Section 6.1.3 of FEMA 302. In addition, they must also resist or accommodate the building deformations resulting from seismic ground motion, as prescribed in Section 6.1.4 of FEMA 302. Architectural exterior and interior panels, partitions, and veneers that are rigid or semi-rigid and continuous shall be supported and attached in a manner that will preclude their participation in the lateral resistance of the building structural system. These components shall not be vertically supported at more than one diaphragm level, and shall be rigidly attached to the structural system on only one edge of the component. The following paragraphs describe and depict appropriate details for representative architectural components. When the rehabilitation options developed in accordance with paragraph 6-2c propose replacement of a deficient support or bracing system, or provide components of a support or bracing system that were omitted for an existing component, the following techniques provide guidance to mitigate the

deficiencies. When the rehabilitation options propose strengthening or stiffening the existing supports or bracing, it may be assumed that the bracing and support system configuration is acceptable, but that individual members may need strengthening, stiffening, or replacing.

b. Exterior curtain walls.

(1) Deficiencies. Common deficiencies of the attachments for rigid curtain walls (e.g., precast concrete panels) are:

(a) Inadequate strength to transfer the panel seismic inertia forces to the building structural system.

(b) Inadequate flexibility and ductility to accommodate interstory drifts.

(2) Strengthening techniques. When rigid curtain wall panels are installed between two floor levels of a flexible structure (e.g., a steel-moment frame), the interstory drift must be accommodated. Plate glass windows are resiliently mounted in frames that allow sufficient clearance for the frame to distort due to interstory drift without damage to the glass. Figures 5.1a and 5.1b in FEMA 172 illustrate a typical connection detail for precast concrete panels in a steel frame building. Note that the panels are rigidly attached to the lower story, and attached with flexible spacer rods at the top story. The interstory drift is accommodated in the horizontal gap between the panels that is caulked with resilient material. The gravity loads and the in-plane seismic inertia forces are transferred to the building frame by the angles at the base of the panel. As indicated in Figure 5.1b, the angle has an oversize hole for panel alignment with a temporary erection bolt, and then is welded to the vertical restrainer plates when the panel is in position. Figure 10-3 in TM 809-04 indicates the necessary panel details for this attachment procedure. If the precast panels are deficient or unsuitable for proper attachment, consideration should be given to removal and replacement with properly designed panels. Glass fiber reinforced concrete (GFRC) panels have been used successfully on many recent building projects. These panels can provide the same outward appearance as ordinary reinforced concrete, but can be much thinner, and therefore significantly lighter in weight, thus reducing the seismic demand on the existing structural members.

c. Appendages. Cornices, parapets, ornamentation, and other architectural appendages that have inadequate anchorage capacity must be rehabilitated to prevent damage and personnel injury from falling debris. Cornice anchorages can be strengthened by removing the cornice material, adding anchorages, and reinstalling the material. A technique that has been used in rehabilitating heavy and ornate cornice work is to remove the cornice, and reconstruct it with adequate anchorage and new, lighter material such as lightweight concrete or plaster. Parapets can be reduced in height so that the parapet dead load will resist uplift from out-of-plane seismic forces, or they can be strengthened with shotcrete or braced back to roof framing (Figures 5.2a and 5.2b in FEMA 172). All elements must be checked for their ability to sustain new forces imposed by the corrective measures.

d. Veneers. Stone and masonry veneers with inadequate anchorage should be strengthened by adding new anchors. Veneers typically must be

removed and replaced for this process. Typical details for approved anchorage of masonry veneers are prescribed in Chapter 12 of ACI 530.

e. Partitions. Heavy partitions such as those of concrete block may fail from excessive flexural stresses due to their out-of-plane seismic inertia forces, or excessive in-plane shear stress caused by interstory drifts. Such partitions should be retrofitted with connections like those shown in Figure 5.4a in FEMA 172 that restrain out-of-plane displacement and allow in-plane displacement. Alternatively, unreinforced masonry partitions can be removed and replaced with drywall partitions. Partitions that cross seismic joints should be reconstructed to allow for longitudinal and transverse movement at joints. Plaster or drywall partitions in office buildings generally need lateral support from ceilings or from the floor or roof framing above the partition. Steel channels are sometimes provided at the top of the partitions. The channels are attached to the ceiling or floor framing; they provide lateral support to the partition, but allow vertical and longitudinal displacement of the floor or ceiling without imposing any loads to the partition. Partitions that do not extend to the floor or roof framing and are not laterally supported by a braced ceiling should be braced to the framing above (as indicated in Figure 5.4b of FEMA 172) with a maximum 12-foot spacing between braces. Hollow clay tile partitions occur in many existing buildings as corridor walls or as nonstructural enclosures for elevator shafts or stairwells. Hollow clay tile is a very strong but brittle material, and it is very susceptible to shattering into fragments that could be hazardous to building occupants. In many cases, it is not possible to isolate these partitions from the lateral displacements of the structural framing, and in those cases, it is advisable to consider either removal of these partitions and replacement with drywall construction, or "basketing" of the potential clay tile fragments with wire mesh.

f. Ceilings. Unbraced suspended ceilings can swing independently of the supporting floor and cause damage or collapse of the ceiling panels, particularly at the perimeters. Providing four-way (12-gauge wire minimum) diagonals and a compression strut between the ceiling grid and the supporting floor at no more than 12 feet on center and within 6 feet of partition walls will significantly improve the seismic performance of the suspended ceiling. Figure 5.5 in FEMA 172 shows a typical detail of the four-way diagonals and the compression strut. In addition to the braces, the connections between the main runners and cross runners should be capable of transferring tension loads. Lay-in ceilings are particularly vulnerable to the relative displacement of the supporting grid members. Splices and connections of the T-bar sections that comprise the grid may have to be stiffened or strengthened with new metal clips and self-threading screws.

g. Lighting fixtures. Suspended fluorescent fixtures are susceptible to several types of seismic damage. Fixtures that are supported by suspended ceiling grids can lose their vertical support when the ceiling sways and distorts under seismic shaking. Independent wire ties connected directly from each of the fixture corners (or at least diagonally opposite corners) to the structural floor above can be added to prevent the fixture from falling (Figure 5.6 in FEMA 172). Pendant-mounted fixtures often are supported by electrical wires. Wire splices can pull apart and

allow the fixtures to fall. The fixtures also may swing and impact adjacent objects, resulting in breakage and fallen fixtures. Safety wires can be installed to prevent the fixtures from falling, and diagonal wires can prevent them from swaying. Some fixture manufacturers also provide threaded metal conduit to protect the wiring and to support the fixture, as well as wire straps or cages that can be added to prevent the fluorescent tubes from falling away from the fixture if they become dislodged.

h. Glass doors and windows. Seismic rehabilitation of glass windows and doors to prevent breakage may be a significant effort. Inadequate edge clearances around the glass to allow the building, and hence, the window frame, to rack in an earthquake without bearing on the glass is the principal cause of breakage. Redesign (along with close installation inspection) of the frame and/or glazing to provide sufficient clearance is necessary to prevent seismic breakage. A technique suggested by Reiterman (1985) to reduce life-safety hazards from falling glass is to apply adhesive solar film to the windows. The film will hold together the glass fragments, while also reducing heat and glare. The application of solar film to insulating glass may cause heat build-up inside the glass, and the possible adverse effects of this build-up need to be considered since damage can result.

i. Raised computer access floors. Access floors typically are constructed of 2-foot by 2-foot wood, aluminum, or steel panels supported on adjustable column pedestals. The column pedestals frequently are fastened to the subfloors with mastic. Some assemblies have stringers that connect the top of the pedestals (Figure 5.8 in FEMA 172), and others have lateral braces. When subjected to lateral loads, access floors typically are very flexible, unless they are specifically designed to be rigid. This flexibility may amplify the ground motions such that equipment supported on the floor may experience significantly high displacements and forces. The high displacements also may cause connection failures that could precipitate a significant collapse of the floor. Existing floors can be rehabilitated by securing the pedestals to the subfloor with expansion anchors, or by adding diagonal bracing to pedestals in a regular pattern (Figure 5.8b in FEMA 172). Rehabilitated floors should be designed and tested to meet both a stiffness and a strength criterion.

9-4. Rehabilitation of Nonstructural Mechanical and Electrical Components

a. General. Nonstructural mechanical and electrical components are often vulnerable to seismic damage in moderate to large earthquakes. Damage to mechanical and electrical components can impair essential building functions or threaten life safety. This section presents common techniques for mitigating seismic damages of the following typical mechanical and electrical components:

- Mechanical and electrical equipment
- Ductwork and piping
- Elevators
- Emergency power systems
- Hazardous material storage systems
- Communication systems
- Computer equipment.

b. Mechanical and electrical equipment. Large equipment that is unanchored or inadequately anchored can slide during an earthquake and damage

utility connections. Tall, narrow units may also be vulnerable to overturning. Positive mechanical anchorages (Figures 6.1a in FEMA 172) will prevent seismic damage.

(1) Electrical equipment frequently is tall and narrow, and may overturn and slide, causing damage to internal instruments and utility connections. This type of equipment can be secured against sliding or rocking in many ways depending on the location of the units relative to adjacent walls, ceiling, and floors (Figure 6.1b in FEMA 172). In all cases, the capacity of the wall to resist the seismic loads imposed by the connected equipment must be verified.

(2) Mechanical or electrical equipment located on vibration isolators may be particularly vulnerable to being shaken off the isolator supports. Rehabilitation to mitigate the potential for damage involves either replacing the vibration isolation units or installing rigid stops. Vibration isolation units that can also provide lateral seismic resistance are available from isolator manufacturers, and these units (Figure 6.1c in FEMA 172) can be installed in place of the existing isolators. Alternatively, rigid stops designed to prevent excessive lateral movement of the equipment can be installed on the existing foundation (Figure 6.1d and 6.1e in FEMA 172). A sufficient gap needs to be provided between the stop and the equipment to prevent the transmission of vibrations through the stops. Where equipment is tall relative to its width, stops in the vertical direction are required to prevent overturning. The equipment itself, its attachments to the isolators or support rails, and the rails themselves can be points of weakness that need to be assessed and strengthened where required.

c. Ductwork and piping. Seismic retrofit of ductwork and piping primarily consists of providing lateral sway braces. The Sheet Metal and Air-Conditioning Contractors National Association (SMACNA) has published guidelines for the design and seismic restraints of new mechanical systems and plumbing piping systems (September 1982) that can also be used for rehabilitation of existing systems. These guidelines were developed for use in areas of relatively high seismicity, and engineering judgment should be used in their application elsewhere.

(1) The SMACNA guidelines for seismic bracing of ductwork recommend that:

(a) All rectangular ducts 6 square feet in area and greater, and round ducts 28 inches in diameter and larger should be seismically braced.

(b) Transverse braces should be installed at a maximum of 30 feet on center, at each duct turn, and at each end of a duct run.

(c) Longitudinal braces should be installed at a maximum of 60 feet on center.

(d) No bracing is required if the top of a duct is suspended 12 inches or less from the supporting structural member, and the suspension straps are attached to the top of the duct.

(e) Flexibility should be provided where pipes pass through seismic or expansion joints.

(2) The SMACNA guidelines for seismic bracing of piping recommend that:

(a) Braces for all pipes 2½ inches in diameter and larger (and also for smaller piping used for fuel gas, oil, medical gas, and compressed air, and smaller piping located in boiler rooms, mechanical

equipment rooms, and refrigeration machinery rooms).

(b) Transverse braces should be installed at a maximum of 40 feet on center.

(c) Longitudinal braces should be installed at a maximum of 80 feet on center.

(d) Thermal expansion and contraction forces, where present, must be considered in the layout of transverse and longitudinal braces.

Figures 6.2a through 6.2c in FEMA 172 show typical seismic brace details for ducting. Duct diffusers also should be positively attached with mechanical anchors to rigid ducts or secured with wires to the floor above when connected to flexible ducts. Figures 6.2d through 6.2g in FEMA 172 show typical details for installing seismic braces for piping.

d. Sprinkler Systems. National Fire Protection Association (NFPA) 13 is the accepted standard for the installation of wet and dry sprinkler systems for fire protection of buildings. Existing sprinkler systems in buildings governed by this document shall be evaluated for compliance with the support and bracing provisions of NFPA 13. Identified deficiencies shall be documented for final assessment and considered for rehabilitation in accordance with paragraph 6.2.

e. Elevators. Elevator machinery and controller units should be anchored like other mechanical and electrical equipment to prevent the units from sliding or toppling. Rope retainer guards should be provided on sheaves to inhibit displacement of wire ropes. Snag points created by rail brackets should be provided with guards so that compensating ropes or chains, governor ropes, suspension ropes, and traveling cables will not snag. Retainer plates should be added to the top and bottom of the cars and counterweights to prevent them from becoming dislodged from the rails. Seismic switches should be installed to provide an electronic alert or command for the safe automatic emergency operation of the elevator system, and to detect lateral motion of the counterweight. For more information on the requirements for elevator seismic safety, refer to ANSI 17.1, *Safety Codes for Elevators and Escalators.*

f. Emergency power systems. Although emergency power systems typically containing batteries, motor generators, fuel tanks, transformers, switchgear, and control panels are designed to be activated in the event of an emergency, many are inadequately protected from earthquake forces.

(1) Batteries are frequently stored in racks as shown in Figure 6.4a in FEMA 172, and structural supports should be installed to restrain the batteries to the racks; the racks should be braced; and adequate anchorages should be provided to carry the lateral loads. Foam spacers also should be fitted snugly between the batteries to prevent them from impacting each other.

(2) Motor generators typically are mounted on vibration isolators, and these units should have seismic stops installed as shown in Figures 6.1d or 6.1e in FEMA 172. Fuel tanks frequently are mounted on legs to facilitate gravity feed of the fuel, and these tanks should be braced as shown in Figure 6.4b in FEMA 172, and provided with adequate anchorage. Flexible fuel piping with adequate loops also should be installed both at the fuel tank and at

the motor generator; transformers, switchgear, and control panels should be anchored as shown in Figure 6.1b in FEMA 172.

g. Hazardous materials storage systems. Seismic-activated shutoff valves should be installed on hazardous materials supply lines. These lines also should be adequately braced as shown in Figures 6.2e and 6.2f in FEMA 172, and should be provided with flexible connections at storage tanks. Bottles of laboratory chemicals should be prevented from falling by using elastic straps or shelf lips as shown in Figure 6.5a in FEMA 172. Liquid oxygen and similar pressurized tanks also should be restrained as indicated in Figure 6.5b in FEMA 172.

h. Communications systems. The operation of communication systems following an earthquake is of vital importance to individuals, communities, federal agencies and private businesses that depend on them to aid in assessing damage and responding to problems.

(1) Telephone communications equipment consists of input and output data processing units, disk drives, central computers, and remote regional and central switching units, much of which is located on raised access floors; this computer-type equipment is discussed in paragraph 9-3i. Remote switching units not located on raised floors should be secured like other mechanical and electrical equipment as discussed in paragraph 9-4b.

(2) Essential facilities such as hospitals and fire and police stations that must have communications capabilities in the event of an earthquake should have backup external and internal communications systems. Radio equipment should be secured to prevent sliding or toppling. Desktop equipment should also be secured or tethered to prevent falling.

i. Computer equipment. Computer equipment vulnerable to seismic damage includes electronic data processing equipment such as mainframes, peripherals, telecommunications cabinets, and tape and disk storage units. Seismic rehabilitation to protect computer equipment is different from that required for other mechanical and electrical equipment for several reasons: (1) computer equipment typically is located on raised access floors that complicate traditional anchorage techniques and may amplify seismic loads; (2) computer equipment design is rapidly evolving and advancing, and units frequently are replaced or rearranged; and (3) some computer equipment may be sensitive to high-frequency vibrations such as those that may be caused by ground shaking.

(1) Electronic data processing (EDP) equipment typically is located on raised access floors; hence, the traditional techniques of anchoring electrical equipment to the floor are complicated by the fact that the anchorage needs to pass through the access floor to the subfloor. This reduces the access to the space beneath the raised floor, and greatly reduces the flexibility to rearrange and replace equipment. Some dynamic tests of EDP equipment also have shown that certain vibration-sensitive equipment may be more prone to seismic damage if it is rigidly anchored to the building and is subjected to high-frequency seismic ground motions than if the equipment is free to slide on the access floor. If EDP units are unrestrained, however, they may slide into

structural walls or adjacent equipment, or their support feet may slide into an access floor penetration, and the unit will topple. Two general solutions may be used to reduce the potential for seismic damage of EDP equipment: (1) rigidly restraining the equipment, or (2) allowing the equipment to slide. Rigid restraints (Figure 6.7a in FEMA 172) may be appropriate for equipment that is not vibration-sensitive, is not likely to be relocated, or is tall and narrow (and, hence, susceptible to toppling). Air-handling units, modem cabinets, and power distribution units fall into this category. Tall, flexible equipment such as modem cabinets may require stiffening or bracing near the top. If anchored only at the base, the seismic motions at the top of the units may be significantly amplified and may result in equipment damage. Figure 6.7b in FEMA 172 shows a detail that will prevent toppling, but does not transmit high-frequency ground shaking to the unit.

(2) Equipment that is vibration sensitive or is likely to require frequent relocations can be isolated to reduce the potential for seismic damage. Some of the considerations necessary for isolating equipment include protecting the equipment from sliding to prevent a supporting foot or caster from falling into an opening in the access floor (provided for cable penetrations). This can be prevented by tethering the equipment to the subfloor (Figure 6.7c of FEMA 172) so that the equipment cannot slide far enough to impact other equipment or walls, or to fall into a penetration. Precautions should be considered for tall equipment restrained with a tether to prevent the equipment from reaching the end of the tether, which may cause the equipment to overturn. Floor penetrations also can be provided with guards (Figure 6.7c in FEMA 172) that will prevent the equipment feet from entering. Adjacent equipment should either be separated by about 1 foot to prevent potential pounding, or should be strapped together (Figure 6.7d in FEMA 172) so that the separate pieces move as a unit.

CHAPTER 10
QUALITY ASSURANCE/QUALITY CONTROL

10-1. General

This chapter prescribes special quality control provisions related to both the seismic evaluation and the seismic rehabilitation design and construction of certain military buildings, as identified herein. These provisions are in addition to those QA/QC processes normally prescribed for evaluation and design, and for the engineering services normally provided during construction of these military buildings. The term Special Independent Technical Review (SITR) is used herein to describe a separate in-depth structural review of the seismic design performed by a qualified reviewer.

10-2. Applicability

The quality requirements given in this chapter shall be applied only to the evaluations, designs, and construction of existing buildings in Seismic Design Categories B, C, D, E, and F that require rehabilitation because of deficiencies in deep foundation systems, intermediate or special moment frames, or special concentric braced frames. Buildings requiring rehabilitation as a result of Tier 2 deficiencies-only evaluations are exempt from this requirement. Additionally, SITRs shall be done for all buildings when the rehabilitation includes seismic isolation or energy-dissipation systems, and for any other building designated by the agency headquarters proponent. All site-specific ground motion studies, whether done for individual buildings or as installation-wide studies, shall be given a SITR.

10-3. Special Independent Technical Review (SITR)

a. Reviewer qualifications. When SITRs are required herein, they shall be performed by one or more structural engineer design professionals, who have been approved by the Government as having recognized expertise in the seismic evaluation and design of buildings.

b. Review scope. A full SITR quality control review of a seismic evaluation or rehabilitation design includes, at a minimum, verification of the validity of all assumptions made during the evaluation or the rehabilitation design processes, and verification of the applicability and theoretical adequacy of the numerical calculations. The SITR will also verify the validity of the selected rehabilitation concepts and their estimated costs. For rehabilitation designs, a SITR will include the determinations both that the design drawings and specifications implement the assumptions made during the rehabilitation design, and that the construction documents are adequate for construction. Based on the stage of the review, evaluation, or rehabilitation design, and on the type and complexity of the structural system involved, the scope of the SITR review will be defined in writing by the cognizant design authority following the guidance discussed below.

c. Review meeting. After completing the SITR, the reviewer or review team will meet with the structural engineer evaluator or designer, as appropriate, to discuss the review results and resolve any differences concerning the evaluation or design that may exist.

d. Review report. Following the review meeting, the reviewer or review team will develop and submit a report summarizing the scope and limitations of the review, the discussions and conclusions from the review meeting, and the final recommendations from the review.

10-4. Evaluation

SITRs will be performed for the seismic evaluations of all buildings meeting the applicability requirements given herein.

10-5. Rehabilitation Design

If, after completion of the evaluation report, a seismic rehabilitation project has been funded, the following SITR activities will be performed during the rehabilitation design process.

a. Review process. A SITR of the rehabilitation designs of all buildings meeting the applicability requirements given herein will be performed as given below.

(1) Concept design review. For seismic rehabilitation projects, both the "*structural rehabilitation strategy*" (Step 2 in Table 6-1) and the "*structural rehabilitation concept*" (Step 3 in Table 6-1) parts of the completed evaluation report, along with both the *"supplementary analysis of existing building (if necessary)"* (Step 3 in Table 7-1) and *"rehabilitation concept selection"* (Step 4 in Table 7-1) parts of the preliminary rehabilitation design shall be given a SITR before the *"rehabilitation design"*(Step 5 in Table 7-1) is begun.

(2) Final design review. Following the completion of the rehabilitation design (Steps 5 & 6 in Table 7-1), during the period when the construction documents are being completed (Step 7 in Table 7-1), a SITR of the final design of the project will be done.

b. Contract specifications. Following the completion of the final design analysis, the structural designer shall edit and include in the contract specifications the guide specification, CEGS-01452, SPECIAL INSPECTION AND TESTING FOR BUILDING SEISMIC-RESISTING SYSTEMS. The editing shall provide the special inspection and testing provisions required for the types of systems constructed in the project.

10-6. Construction

During the construction of seismic-force-resisting structural systems, the structural designer or the SITR reviewer shall provide the following quality assurance services:

a. Review the qualifications of the special inspector.

b. Review the construction quality assurance plan, done in accordance with the requirements in CEGS-01452.

c. Review the special inspector's reports concerning observations and testing.

d. Perform *"Structural Observations"* as described in Chapter 3 of FEMA 302.

e. Review drafts of as-built drawings to confirm the final constructed conditions of the structural lateral-force-resisting system(s) are accurately detailed.

APPENDIX A
REFERENCES

A-1. Government Publications

a. Departments of the Army, Navy, and Airforce
TI 809-04, December 1998
Seismic Design for Buildings.

TI 809-04, December 1998
Seismic Design for Buildings.
Appendices.

b. Federal Emergency Management Agency
FEMA 172, June 1992
NEHRP Handbook for Seismic Rehabilitation of Existing Buildings.

FEMA 267, August 1995
Interim Guidelines: Evaluation, Repair, Modification and Design of Welded Steel Moment Frame Structures.

FEMA 273, October 1997
NEHRP Guidelines for the Seismic Rehabilitation of Buildings.

FEMA 274, October 1997
NEHRP Commentary on the Guidelines for the Seismic Rehabilitation of Buildings.

FEMA 302, February 1998
NEHRP Recommended Provisions for Seismic Regulations for Buildings and Other Structures.
Part 1. – Provisions.

FEMA 303, February 1998
NEHRP Recommended Provisions for Seismic Regulations for Buildings and Other Structures.
Part 2. – Commentary.

FEMA 310, January 1998
Handbook for the Seismic Evaluation of Buildings.
A Prestandard.

c. General Accounting Office
GAO/GGD-92-62, May 1992
Report to Congressional Committees: "Federal Buildings, Many are Threatened by Earthquakes, but Limited Action has been Taken."

d. National Advisory Council on Historic Preservation
36FR Part 800: Protection of Historic Properties.

e. National Institute of Standards and Technology
ICSSC RP4, February 1994
Standards of Seismic Safety for Existing Federally Owned or Leased Buildings and Commentary.

f. Office of the President
Executive Order 12941, December 1, 1994 Seismic Safety of Existing Federally Owned or Leased Buildings.

g. U.S. Congress
PL 96-515, 1966
National Historic Preservation Act.

PL 101-614, November 1990
National Earthquake Hazards Reduction Program (NEHRP) Reauthorization Act.

h. U.S. Geological Survey/Building Seismic Safety Council
Maximum Considered Earthquake (MCE) Maps, 1997.

A-2. Nongovernment Publications

a. ABK, a Joint Venture
250 North Nash Street
El Segundo, California, 90245.

Methodology for Mitigation of Seismic Hazards in Existing Unreinforced Masonry Buildings: The Methodology. January 1984.

b. American Concrete Institute
Box 19150
Redford Station, Detroit, MI 48219.

ACI 318-95, Building Code Requirements for Reinforced Concrete.

ACI 530-95/ASCE 5-95/TMS 402-95, Building Code Requirements for Masonry Structures.

c. American Institute of Steel Construction, Inc.
One East Wacker Drive, Suite 3100
Chicago, Ill., 60601-2001.

Seismic Provisions for Structural Steel Buildings, April 1997.

d. American Society of Mechanical Engineers
1400 East 47th Street
New York, NY, 10017.

ASME 17.1-96, Safety Code for Elevators and Escalators.

e. American Society for Testing Materials
1916 Race Street
Philadelphia, PA 19105.

ASTM A307-94, Specification for Carbon Steel Bolts and Studs, 60,000 psi Tensile Strength.

ASTM A325-96, Specification for Structural Bolts and Studs, Steel, Heat-treated, 120/105 ksi Minimum Tensile Strength.

f. National Fire Protection Association
Batterymarch Park
Quincy, MA 02269.

NFPA 13, 1996 Edition
Standard for the Installation of Sprinkler Systems.

g. Sheet Metal and Air Conditioning Contractors National Association
Chantilly, VA 22046.

SMACNA 1982, Guidelines for Seismic Restraint of Mechanical Systems and Plumbing Piping Systems.

SMACNA 1991, Seismic Restraint Guidelines for Mechanical Equipment.

APPENDIX B
SYMBOLS AND NOTATIONS

CERL	The Construction Engineering Research Laboratory of the US Army Corps of Engineers in Champaign, Illinois.
CMU	Concrete masonry units.
C_s	Seismic response coefficient
EDP	Electronic data processing.
F_a	Acceleration-based site coefficient at short periods in Table 3-2a of TI 809-04.
F_p	Seismic design force for nonstructural components as defined in paragraph 6-3b.
F_v	Velocity-based site coefficient at a period of 1 second in Table 3-2b of TI 809-04.
FRP	Fiber reinforced polymer.
h	Average roof height of structure relative to grade.
I_p	Importance factor for nonstructural components as defined in paragraph 4-4b(2).
LDP	Linear dynamic procedure as defined in paragraph 5-3 of TI 809-04.
LSP	Linear static procedure as defined in paragraph 5-3 of TI 809-04.
M_P	The plastic moment capacity of a structural component
MCE	The maximum considered earthquake as defined in paragraph 3-1c of TI 809-04.
m	Component or element demand modifier to account for expected ductility at the selected performance level as defined in Chapter 7 of TI 809-04.
m^2	Square meters.
NEHRP	The National Earthquake Hazards Reduction Program, enacted by Public Law 101-614.
NFPA	National Fire Protection Agency.
NDP	Nonlinear dynamic procedure as defined in paragraph 5-4 of TI 809-04.
NSP	Nonlinear static procedure as defined in paragraph 5-4 of TI 809-04.
P-Δ	The secondary moment caused by the unfactored vertical load, P, at and above the level under consideration, multiplied by the story drift, Δ, at that level.
QA/QC	Quality assurance and quality control as defined in Chapter 10.
Q_{CE}	The expected strength of deformation-controlled structural components as defined in paragraph 5-2a(4)(a).
Q_{CL}	Lower-bound strength of deformation-controlled structural components as defined in paragraph 5-2a(2).
Q_D	Dead load effect (action) as defined in Section 4.2.4.2 of FEMA 310.
Q_E	Effects of seismic forces (actions) as defined in Section 4.2.4.3.1 of FEMA 310.
Q_G	Effects of gravity loads as defined by Equation 7-1 of this document or 4-6 and 4-7 of FEMA 310.
Q_L	Live load effect (action) as defined in Section 4.2.4.2 of FEMA 310 or ASCE 7.
Q_N	The nominal strength of structural components as defined in Section 5.10 of FEMA 273.

Q_S Snow load effect (action) as defined in Section 4.2.4.2 of FEMA 310.

Q_{UD} Design action due to combined gravity and seismic loads for deformation-controlled components as defined by Equation 4-8 of FEMA 310.

Q_{UF} Design action due to combined gravity and seismic loads for force-controlled components as defined by Equations 4-9 or 4-10 of FEMA 310.

S_1 The mapped maximum considered earthquake, 5% damped, spectral response acceleration at a period of 1 second as defined in paragraph 3-1c of TI 809-04.

S_{DI} The design, 5% damped, spectral response acceleration at a period of 1 second as defined in paragraph 3-2b of TI 809-04.

S_{DS} The design, 5% damped, spectral response acceleration at short periods as defined in paragraph 3-2b of TI 809-04.

S_S The mapped maximum considered earthquake, 5% damped, spectral response acceleration at short periods as defined in paragraph 3-1c of TI 809-04.

SITR Special Independent Technical Review.

SMACNA Sheet Metal and Air Conditioning Contractors National Association.

URM Unreinforced masonry, includes brick, stone, hollow clay tile, and CMU.

V_{DL+LL} The shear due to the effects of the dead load plus the design live load.

Δ/Δ_y Component or element deformation ratio as defined in Figure 7-2b.

δ_t The target displacement of the building reference point in the nonlinear static procedure as defined by Equation 5-5 in TI 809-04.

Θ Component or element joint rotation in radians as defined in Figure 7-2a.

$\Theta/\Theta y$ Component or element joint rotation ratio as defined in Figure 7-2b.

Ω_o Overstress factor as defined in Para. 4.5 of TI-809-04.

APPENDIX C
GLOSSARY

Acceptance Criteria: Permissible values of such properties as drift, component strength demand, and inelastic deformation used to determine the acceptability of a component's projected behavior at a given Performance Level.

Action: Sometimes called a generalized force, most commonly a single force or moment. However, an action may also be a combination of forces and moments, a distributed loading, or any combination of forces and moments. Actions always produce or cause displacements or deformations; for example, a bending moment action causes flexural deformation in a beam; an axial force action in a column causes axial deformation in the column; and a torsional moment action on a building causes torsional deformations (displacements) in the building.

Addition: An increase in building area, aggregate floor area, height, or number of stories of a structure.

Alteration: Any construction or renovation to an existing structure other than an addition.

Appendage: An architectural component such as a canopy, marquee, ornamental balcony, or statuary.

Approval: The written acceptance by the regulatory agency of documentation that establishes the qualification of a material, system, component, procedure, or person to fulfill the requirements of these provisions for the intended use.

Architectural Component Support: Those structural members or assemblies of members, including braces, frames, struts and attachments, that transmit all loads and forces between architectural systems, components, or elements and the structure.

Attachments: Means by which components and their supports are secured or connected to the seismic-force-resisting system of the structure. Such attachments include anchor bolts, welded connections, and mechanical fasteners.

Base: The level at which the horizontal seismic ground motions are considered to be imparted to the structure.

Base Shear: Total design lateral force or shear at the base.

Basement: A basement is any level below the first story.

Boundary Elements: Diaphragm and shear wall boundary members to which sheathing transfers forces. Boundary members include chords and drag struts at diaphragm and shear wall perimeters, interior openings, discontinuities, and reentrant corners.

Boundary Members: Portions along wall and diaphragm edges strengthened by longitudinal and transverse reinforcement and/or structural steel members.

Braced Frames: An essentially vertical truss, or its equivalent, of the concentric or eccentric type that is provided in a building frame system or dual-frame system to resist in-plane lateral loads.

> **Concentrically Braced Frame (CBF):** A braced frame in which the members are subjected primarily to axial forces.
>
> **Eccentrically Braced Frame (EBF):** A diagonally braced frame in which at least one end of each brace frames into a beam a short distance from a beam-column joint or from another diagonal brace.
>
> **V-Braced Frame:** A concentric braced frame (CBF) in which a pair of diagonal braces located either above or below a beam is connected to a single point within the clear beam span. Where the diagonal braces are below the beam, the system also is referred to as an "inverted V-brace frame," or "chevron bracing."
>
> **X-Braced Frame:** A concentric braced frame (CBF) in which a pair of diagonal braces crosses near the mid-length of the braces.

Brittle: Systems, members, materials, and connections that do not exhibit significant energy dissipation capacity in the inelastic range.

Building: Any structure whose use could include shelter of human occupants.

Building Performance Level: A limiting damage state, considering structural and nonstructural building components, used in the definition of Performance Objectives.

Capacity: The permissible strength or deformation for a component action.

Components: The basic structural members that constitute the building, such as beams, columns, slabs, braces, piers, walls, coupling beams, and connections. Components such as columns and beams are combined to form elements (e.g., a frame).

> **Component, Deformation-controlled:** A structural component that can deform inelastically in a ductile manner.
>
> **Component, Equipment:** A mechanical or electrical component or element that is part of a mechanical and/or electrical system within or without a building system.
>
> **Component, Flexible:** Component, including its attachments, having a fundamental period greater than 0.06 sec.
>
> **Component, Force-controlled:** A structural component that is essentially brittle and lacks the ability to deform inelastically in a ductile manner.
>
> **Component, Rigid:** Component, including its attachments, having a fundamental period less than or equal to 0.06 sec.

Concrete:

> **Plain Concrete:** Concrete that is either unreinforced or contains less reinforcement than the minimum amount specified in ACI-318 for reinforced concrete.
>
> **Reinforced Concrete:** Concrete reinforced with no less than the minimum amount required by ACI-318, prestressed or nonprestressed, and designed on the assumption that the two materials act together in resisting forces.

Confined Region: That portion of a reinforced concrete component in which the concrete is confined by closely spaced special transverse reinforcement restraining the concrete in directions perpendicular to the applied stress.

Construction Documents: The written, graphic, electronic, and pictorial documents describing the design, locations, and physical characteristics of the project.

Coupling Beam: A beam that is used to connect adjacent concrete wall piers to make them act together as a unit to resist lateral loads.

Critical Action: That component action that reaches its elastic limit at the lowest level of lateral deflection, or loading, for the structure.

Damping: The exponential decay of the free vibration of an elastic single-degree-of-freedom system due to internal energy dissipation. Usually expressed as a percentage of critical damping.

> **Critical Damping:** The amount of energy dissipation required to restrain a displaced elastic single-degree-of-freedom system from vibration beyond the initial "at rest" position.

Demand: The amount of force or deformation imposed on an element or component.

Design Earthquake Ground Motion: The earthquake effects that buildings and structures are specifically proportioned to resist as defined in Sec. 4.1 of NEHRP '97.

Design Earthquake: The earthquake for use with this document is two-thirds the maximum considered earthquake.

Diaphragm: A horizontal or nearly horizontal system acting to transfer lateral forces to the vertical-resisting elements. Diaphragms are classified as either flexible or rigid according to the requirement of Sec. 12.3.4.2 of NEHRP '97.

Diaphragm Boundary: A location where shear is transferred into or out of the diaphragm sheathing. Transfer is either to a boundary element or to another force-resisting element.

Diaphragm Chord: A diaphragm boundary element perpendicular to the applied load that is assumed to take axial stresses due to the diaphragm moment in a manner analogous to the flanges of a beam. Also applies to shear walls.

Diaphragm Collector: A diaphragm component provided to transfer lateral force from the diaphragm to vertical elements of the later-force-resisting system or to other portions of the diaphragm.

Displacement:

Design Displacement: The design earthquake lateral displacement, excluding additional displacement due to actual and accidental torsion, required for design of the isolation system.

Total Design Displacement: The design earthquake lateral displacement, including additional displacement due to actual and accidental torsion, required for design of the isolation system, or an element thereof.

Total Maximum Displacement: The maximum capable earthquake lateral displacement, including additional displacement due to actual and accidental torsion, required for verification of the stability of the isolation system or elements thereof, design of building separations, and vertical-load testing of isolator unit prototypes.

Displacement Restraint System: A collection of structural elements that limits lateral displacement of seismically isolated structures due to the maximum considered earthquake.

Drag Strut (Collector, Tie, Diaphragm Strut): A diaphragm or shear wall boundary element parallel to the applied load that collects and transfers diaphragm shear forces to the vertical-force-resisting elements, or distributes forces within the diaphragm or shear wall. A drag strut often is an extension of a boundary element that transfers forces into the diaphragm or shear wall.

Drift Ratio: Ratio of the displacement of the top of a structural component, relative to its base, to the height of the component.

Interstory Drift Ratio: The interstory displacement divided by the story height.

Effective Damping: The value of equivalent viscous damping corresponding to energy dissipated during cyclic response of the isolation system.

Effective Stiffness: The value of the lateral forces in the isolation system, or an element thereof, divided by the corresponding lateral displacement.

Element: An assembly of structural components that act together in resisting lateral forces, such as moment-resisting frames, braced frames, shear walls and diaphragms.

Ductile Element: An element capable of sustaining large cyclic deformations beyond the attainment of its nominal strength without any significant loss of strength.

Limited Ductile Element: An element that is capable of sustaining moderate cyclic deformations beyond the attainment of nominal strength without significant loss of strength.

Nonductile Element: An element having a mode of failure that results in an abrupt loss of resistance when the element is deformed beyond the deformation corresponding to the development of its nominal strength. Nonductile elements cannot reliably sustain significant deformation beyond that attained at their nominal strength.

Equipment Support: Those structural members or assemblies of members or manufactured elements, including braces, frames, legs, lugs, snuggers, hangers or saddles, that transmit gravity load and operating load between the equipment and the structure.

Essential Facility: A facility or structure required for post-earthquake recovery.

Flexible Diaphragm: A diaphragm with stiffness characteristics indicated in paragraph 5-9b(1) of TI-809-04.

Flexible Equipment Connections: Those connections between equipment components that permit rotational and/or translational movement without degradation of performance. Examples include universal joints, bellows expansion joints, and flexible metal hose.

Foundations:

Allowable Bearing Capacity: Foundation load or stress commonly used in working-stress design (often controlled by long-term settlement rather than soil strength).

Deep Foundation: Piles or piers.

Differential Compaction: An earthquake-induced process in which loose or soft soils become more compact and settle in a nonuniform manner across a site.

Footing: A structural component transferring the weight of a building to the foundation soils and resisting lateral loads.

Foundation Soils: Soils supporting the foundation system and resisting vertical and lateral loads.

Foundation Springs: Method of modeling to incorporate load-deformation characteristics of foundation soils.

Foundation System: Structural components (footings, piles).

Foundation Ties: Horizontal beams between footings or pile and pier caps to prevent differential lateral displacements in poor soils. Ties are usually designed as struts for a small percentage of the vertical footing load.

Landslide: A down-slope mass movement of earth resulting from any cause.

Liquefaction: An earthquake-induced process in which saturated, loose, granular soils lose a substantial amount of shear strength as a result of increase in porewater pressure during earthquake shaking.

Pier: Similar to pile; usually constructed of concrete and cast in place.

Pile: A deep structural component transferring the weight of a building to the foundation soils and resisting vertical and lateral loads; constructed of concrete, steel, or wood; usually driven into soft or loose soils.

Retaining Wall: A free-standing wall that has soil on one side.

Shallow Foundation: Isolated or continuous spread footings or mats.

Spread Footing: An individual footing under a column or a pier. Usually square or rectangular in shape.

SPT N-Values: Using a standard penetration test (ASTM Test D1586), the number of blows of a 140-pound hammer falling 30 inches required to drive a standard 2-inch-diameter sampler a distance of 12 inches.

Strip Footing: A continuous footing, usually a uniform width, under a bearing or shear wall.

Ultimate Bearing Capacity: Maximum possible foundation load or stress (strength); increase in deformation or strain results in no increase in load or stress.

Frame Systems:

Building Frame System: A structural system with an essentially complete space frame system providing support for vertical loads. Seismic-force resistance is provided by shear walls or braced frames.

Dual-Frame System: A structural system with an essentially complete space frame system providing support for vertical loads. Seismic force resistance is provided by moment-resisting frames and shear walls or braced frames as prescribed in Sec. 5.2.2.1 of NEHRP '97.

Moment Frame System: A structural system with an essentially complete space frame system providing support for vertical loads, with restrained connections between the beams and columns to permit the frames to resist lateral forces through the flexural rigidity and strength of its members.

Fundamental Period: The first mode period of the building in the direction under consideration.

Grade Plane: A reference place representing the average of finished ground level adjoining the building at all exterior walls. Where the finished ground level slopes away from the exterior walls, the reference plane shall be established by the lowest point within the area between the buildings and the lot line, or where the lot line is more than 6 ft. (1,829mm) from the building, between the building and a point 6 ft. (1829mm) from the building.

Hazardous Contents: A material that is highly toxic or potentially explosive and in sufficient quantity to pose a significant life-safety threat to the general public if an uncontrolled release were to occur.

Inspection, Special: The observation of the work by the special inspector to determine compliance with the approved construction documents.

Continuous Special Inspection: The full-time observation of the work by an approved special inspector who is present in the area where work is being performed.

Periodic Special Inspection: The part-time or intermittent observation of the work by an approved special inspector who is present in the area where work has been or is being performed.

Inspector, Special (who shall be identified as the Owner's Inspector): A person approved by the regulatory agency as being qualified to perform special inspection required by the approved quality assurance plan. The quality assurance personnel of a fabricator may be approved by the regulatory agency as a special inspector.

Inter-Story Drift: The relative horizontal displacement of two adjacent floors in a building. Inter-story drift can also be expressed as a percentage of the story height separating the two adjacent floors.

Joint: That portion of a column bounded by the highest and lowest surfaces of the other members framing into it.

Lateral-Force-Resisting System: Those elements of the structure that provide its basic lateral strength and stiffness, and without which the structure would be laterally unstable.

Ledger: A continuous steel or timber element, bolted to a wall. Used to transfer vertical and horizontal diaphragm forces to concrete or masonry walls.

Load:

Dead Load: The gravity load due to the weight of all permanent structural and nonstructural components of a building such as walls, floors, roofs, and the operating weight of fixed service equipment.

Gravity Load (W): The total dead load and applicable portions of other loads as defined in Sec. 5.3.2 of NEHRP '97.

Live Load: The load superimposed by the use and occupancy of the building, not including the wind load, earthquake load, or dead load; see Sec. 5.3.2 of NEHRP '97.

LRFD (Load and Resistance Factor Design): A method of proportioning structural components (members, connectors, connecting elements, and assemblages using load and resistance factors such that no applicable limit state is exceeded when the structure is subjected to all design load combinations.

Masonry: The assemblage of masonry units, mortar, and possibly grout and/or reinforcement. Types of masonry are classified herein with respect to the type of the masonry units, such as clay-unit masonry, concrete masonry, or hollow-clay tile masonry.

Bed Joint: The horizontal layer of mortar on which a masonry unit is laid.

Cavity Wall: A masonry wall with an air space between wythes. Wythes are usually joined by wire reinforcement, or steel ties. Also known as a noncomposite wall.

Clay-Unit Masonry: Masonry constructed with solid, cored, or hollow units made of clay. Hollow clay units may be ungrouted, or grouted.

Clay Tile Masonry: Masonry constructed with hollow units made of clay tile. Typically, units are laid with cells running horizontally, and are thus ungrouted. In some cases, units are placed with cells running vertically, and may or may not be grouted.

Collar Joint: Vertical longitudinal joint between wythes of masonry or between masonry wythe and back-up construction that may be filled with mortar or grout.

Composite Masonry Wall: Multiwythe masonry wall acting with composite action.

Concrete Masonry: Masonry constructed with solid or hollow units made of concrete. Hollow concrete units may be ungrouted, or grouted.

Head Joint: Vertical mortar joint placed between masonry units in the same wythe.

Hollow Masonry Unit: A masonry unit whose net cross-sectional area in every plane parallel to the bearing surface is less than 75% of the gross cross-sectional area in the same plane.

Infill: A panel of masonry placed within a steel or concrete frame. Panels separated from the surrounding frame by a gap are termed "isolated infills." Panels that are in tight contact with a frame around its full perimeter are termed "shear infills."

In-plane Wall: See shear wall.

Nonbearing Wall: A wall that is designed and detailed so as not to participate in providing support for gravity loads.

Out-of-plane Wall: A wall that resists lateral forces applied normal to its plane.

Parapet: Portions of a wall extending above the roof diaphragm. Parapets can be considered as flanges to roof diaphragms if adequate connections exist or are provided.

Partially Grouted Masonry Wall: A masonry wall containing grout in some of the cells.

Perforated Wall or Infill Panel: A wall or panel not meeting the requirements for a solid wall or infill panel.

Pier: A vertical portion of masonry wall between two horizontally adjacent openings. Piers resist axial stresses from gravity forces, and bending moments from combined gravity and lateral forces.

Reinforced Masonry (RM) Walls: A masonry wall that is reinforced in both the vertical and horizontal directions. Reinforced walls are assumed to resist loads through resistance of the masonry in compression and the reinforcing steel in tension or compression. Reinforced masonry is partially grouted or fully grouted.

Running Bond: A pattern of masonry where the head joints are staggered between adjacent courses by more than a third of the length of a masonry unit. Also refers to the placement of masonry units such that head joints in successive courses are horizontally offset at least one-quarter the unit length.

Solid Masonry Unit: A masonry unit whose net cross-sectional area in every plane parallel to the bearing surface is 75% or more of the gross cross-sectional area in the same plane.

Solid Wall or Solid Infill Panel: A wall or infill panel with openings not exceeding 5% of the wall surface area. The maximum length or height of an opening in a solid wall must not exceed 10% of the wall width or story height. Openings in a solid wall or infill panel must be located within the middle 50% of a wall length and story height, and must not be contiguous with adjacent openings.

Stack Bond: In contrast to running bond, usually a placement of units such that the head joints in successive courses are aligned vertically.

Transverse Wall: A wall that is oriented transverse to the in-plane shear walls, and resists lateral forces applied normal to its plane. Also known as an out-of-plane wall.

Unreinforced Masonry (URM) Wall: A masonry wall containing less than the minimum amounts of reinforcement as defined for reinforced masonry (RM) walls. An unreinforced wall is assumed to resist gravity and lateral loads solely through resistance of the masonry materials.

Wythe: A continuous vertical section of a wall, one masonry unit in thickness.

Maximum Considered Earthquake Ground Motion: The most severe earthquake effects considered by this document as defined in Chapter 3 of TI-809-04.

Moment Frames: A building frame system in which seismic forces are resisted by shear and flexure in the members and joints of the frame.

Panel Zone: The portion of the column in a beam/column joint of a structural steel moment frame that is bounded by the beam flange connection.

Partition: A nonstructural interior wall that spans from floor to ceiling, to the floor or roof structure immediately above, or to subsidiary structural members attached to the structure above. A partition may receive lateral support from the floor above, but shall be designed and detailed so as not to provide lateral or vertical support for that floor.

P-Delta Effect: The secondary effect on shears and moments of frame members due to the action of the

vertical loads induced by displacement of the building frame resulting from the design loads.

Pilaster: A vertical element, reinforced to function as a column, that is constructed integrally as part of a concrete or masonry wall.

Primary Component: Those components that are required as part of the building's lateral-force-resisting system (as contrasted to secondary components).

Primary Element: An element that is essential to the ability of the structure to resist earthquake-induced deformations.

Quality Assurance Plan: A detailed written procedure that establishes the systems and components subject to special inspection and testing.

Rehabilitation Concept: Preliminary design and drawings based on selected rehabilitation strategy. Design and drawings should establish preliminary sizes and configurations of principal structural components in sufficient detail to develop the program construction cost estimate.

Rehabilitation Strategy: After assessment of the results of the structural evaluation, all feasible options should be explored for the mitigation of the observed deficiencies. If structural mitigation is authorized, one or more rehabilitative strategies (e.g., strengthen or stiffen existing structural members or add new shear walls) should be developed.

Required Strength: The load effect (force, moment, stress, as appropriate) acting on a component or connection, determined by structural analysis from the factored loads (using the most appropriate critical load combinations).

Rigid Diaphragm: A diaphragm that meets requirements of paragraph 5-9b (1) in TI-809-04.

Secondary Component: Those components that are not required for lateral-force resistance (contrasted to primary components). They may or may not actually resist some lateral forces.

Secondary Element: An element that does not affect the ability of the structure to resist earthquake-induced deformations.

Seismic Demand: Seismic hazard level commonly expressed in the form of a ground shaking response spectrum. It may also include an estimate of permanent ground deformation.

Seismic Design Category: A classification assigned to a structure based on its Seismic Use Group and the severity of the design earthquake ground motion at the site.

Seismic Evaluation: Assessment of the vulnerability of the building's structural and nonstructural components and systems to seismic-geological hazards.

> **Tier 1 Evaluation**: Preliminary assessment of structural, nonstructural, and geologic site hazards by means of checklists in FEMA 310.
>
> **Tier 2 Evaluation:** "Deficiencies only" or "full building" assessment of the seismic vulnerability of structural and nonstructural components and systems based on guidelines in Chapter 4 of FEMA 310, and the linear analytical procedures in FEMA 273.
>
> **Tier 3 Evaluation:** Detailed assessment of the vulnerability of structural components and systems with the nonlinear analytical procedures in FEMA 273.

Seismic-Force-Resisting System: That part of the structural system that has been considered in the design to provide the required resistance to the shear wall prescribed herein.

Seismic Forces: The assumed forces prescribed herein, related to the response of the structure to earthquake motions, to be used in the design of the structure and its components.

Seismic-Geologic Hazard: The potential for the occurrence of natural phenomena, associated with earthquakes, that could cause damage to the built environment and/or injury or death to the public. The hazard may be defined in deterministic or probabilistic terms.

Seismic Isolation and Energy Dissipation:

> **Design Displacement:** The design earthquake displacement of an isolation or energy dissipation system, or elements thereof, excluding additional displacement due to actual and accidental torsion.

Design Earthquake: A user-specified earthquake for the design of an isolated building, having ground-shaking criteria described in Chapter 3 of TI-809-04.

Displacement-Dependent Energy Dissipation Devices: Devices having mechanical properties such that the force in the device is related to the relative displacement in the device.

Displacement Restraint System: Collection of structural components and elements that limit lateral displacement of seismically isolated buildings during the maximum considered earthquake.

Effective Damping: The value of equivalent viscous damping corresponding to the energy dissipated by the building, or element thereof, during a cycle of response.

Energy Dissipation Device (EDD): Non-gravity-load-supporting element designed to dissipate energy in a stable manner during repeated cycles of earthquake demand.

Energy Dissipation System (EDS): Complete collection of all energy dissipation devices, their supporting framing, and connections.

Isolation Interface: The boundary between the upper portion of the structure (superstructure), which is isolated, and the lower portion of the structure, which moves rigidly with the ground.

Isolation System: The collection of structural elements that includes all individual isolator units, all structural elements that transfer force between elements of the isolation system, and all connections to other structural elements. The isolation system also includes the wind-restraint system, if such a system is used to meet the design requirements of this section.

Isolator Unit: A horizontally flexible and vertically stiff structural element of the isolation system that permits large lateral deformations under seismic load. An isolator unit may be used either as part of or in addition to the weight-supporting system of the building.

Maximum Displacement: The maximum earthquake displacement of an isolation or energy dissipation system, or elements thereof, excluding additional displacement due to actual or accidental torsion.

Tie-Down System: The collection of structural connections, components, and elements that provide restraint against uplift of the structure above the isolation system.

Total Design Displacement: The design displacement of an isolation or energy dissipation
system, or elements thereof, including additional displacement due to actual and accidental torsion.

Velocity-Dependent Energy Dissipation Devices: Devices having mechanical characteristics such that the force in the device is dependent on the relative velocity in the device.

Wind-Restraint System: The collection of structural elements that provides restraint of the seismic-isolated
structure for wind loads. The wind-restraint system may be either an integral part of isolator units or a separate device.

Seismic Response Coefficient: Coefficient C_s as determined from Sec. 5.3.2.1 of NEHRP '97.

Seismic Use Group: A classification assigned to a building based on its use as defined in Sec. 1.3 of NEHRP '97.

Shear Panel: A floor, roof, or wall component sheathed to act as a shear wall or diaphragm.

Site Class: A classification assigned to a site based on the types of soils present and their engineering properties as defined in Sec. 4.1.2 of NEHRP '97.

Site Coefficients: The values of F_a and F_v, indicated in Tables 1.4.2.3a and 1.4.2.3b, respectively, of TI-809-04.

Special Transverse Reinforcement: Reinforcement composed of spirals, closed stirrups, or hoops and supplementary cross-ties provided to restrain the concrete and qualify the portion of the component, where used, as a confined region.

Steel Frame Elements:

Connection: A link between components or elements that transmits actions from one component or element to another component or element. Categorized by type of action (moment, shear, or axial), connection links are frequently nonductile.

Continuity Plates: Column stiffeners at the top and bottom of the panel zone.

Diagonal Bracing: Inclined structural members carrying primarily axial load, employed to enable a structural frame to act as a truss to resist lateral loads.

Dual System: A structural system included in building with the following features:

- An essentially complete space frame provides support for gravity loads.
- Resistance to lateral load is provided by concrete of steel shear walls, steel eccentrically braced frames (EBF), or concentrically braced frames (CBF) along with moment-resisting frames (Special Moment Frames, or Ordinary Moment Frames) that are capable of resisting at least 25% of the lateral loads.

Joint: An area where two or more ends, surfaces, or edges are attached. Categorized by the type of fastener or weld used and the method of force transfer.

Lateral Support Member: A member designed to inhibit lateral buckling or lateral-torsional buckling of a component.

Link: In an EBF, the segment of a beam that extends from column to brace, located between the end of a diagonal brace and a column, or between the ends of two diagonal braces of the EBF. The length of the link is defined as the clear distance between the diagonal brace and the column face, or between the ends of two diagonal braces.

Link Intermediate Web Stiffeners: Vertical web stiffeners placed within the link.

Panel Zone: The area of a column at the beam-to-column connection delineated by beam and column flanges.

Storage Racks: Include industrial pallet racks, movable shelf racks, and stacker racks made of cold-formed or hot-rolled structural members. Does not include other types of racks such as drive-in and drive-through racks, cantilever racks, portable racks, or racks made of materials other than steel.

Story: The vertical distance from the top to top of two successive tiers of beams or finished floor surfaces; and, for the topmost story, from the top of the floor finish to the top of the ceiling joists, or where there is not a ceiling, to the top of the roof rafters.

Story Above Grade: Any story having its finished floor surface entirely above grade, except that a basement shall be considered as a story above grade where the finished floor surface of the floor above the basement is:

1. More than 6 feet (1,829mm) above the grade plane;
2. More than 6 feet (1,829mm) above the finished ground level for more than 40 percent of the total building perimeter; or
3. More than 12 feet (3,658mm) above the finished ground level at any point.

Story Drift Ratio: The story drift, as determined in Sec. 5.3.7 of NEHRP '97, divided by the story height.

Story Shear: The summation of design lateral forces at levels above the story under consideration.

Strength:

Design Strength: Nominal strength multiplied by a strength reduction factor, ϕ.

Effective Strength: Nominal strength multiplied by a strength increase factor to represent the expected mean strength at the expected deformation value. Includes variability in material strength, and such phenomena as strain hardening and plastic section development.

Nominal Strength: Strength of a member or cross section calculated in accordance with the requirements and assumptions of the strength design methods of NEHRP '97 (or the referenced standards) before application of any strength reduction factors.

Required Strength: Strength of a member, cross section, or connection required to resist factored loads or related internal moments and forces in such combinations as stipulated by NEHRP '97.

Structure: That which is built or constructed, and limited to buildings or non-building structures as defined herein.

Structural Observations: The visual observations performed by the registered design professional in responsible charge (or another registered design professional) to determine that the seismic-force-resisting system is constructed in general conformance with the construction documents.

Structural Performance Level: A limiting structural damage state, used in the definition of Performance Objectives.

Structural Use Panel: A wood-based panel product that meets the requirements of NEHRP '97, and is bonded with a waterproof adhesive. Included under this designation are plywood, oriented strand board, and composite panels.

Subdiaphragm: A portion of a diaphragm used to transfer wall anchorage forces to diaphragm cross ties.

Target Displacement: An estimate of the likely building roof displacement in the design earthquake.

Tie-Down (Hold-down): A device used to resist uplift of the chords of shear walls. These devices are intended to resist load without significant slip between the device and the shear wall chord, or be shown with cyclic testing to not reduce the wall capacity or ductility.

Time Effect Factor (λ): A factor applied to the adjusted resistance to account for effects of duration of load.

Torsional Force Distribution: The distribution of horizontal shear wall through a rigid diaphragm when the center of mass of the structure at the level under consideration does not coincide with the center of rigidity (sometimes referred to as diaphragm rotation).

Toughness: The ability of a material to absorb energy without losing significant strength.

Veneers: Facings or ornamentation of brick, concrete, stone, tile, or similar materials attached to a backing.

Wall: A component that has a slope of 60 degrees or greater with the horizontal plane used to enclose or divide space.

Bearing Wall: An exterior or interior wall providing support for vertical loads.

Cripple Wall: A framed stud wall, less than 8 feet (2400mm) in height, extending from the top of the foundation to the underside of the lowest floor framing. Cripple walls occur in both engineered structures and conventional construction.

Light-Framed Wall: A wall with wood or steel studs.

Light-Framed Wood Shear Wall: A wall constructed with wood studs and sheathed with material rated for shear resistance.

Nonbearing Wall: An exterior or interior wall that does not provide support for vertical loads, other than its own weight, or as permitted by the building code administered by the regulatory agency.

Nonstructural Wall: All walls other then bearing walls or shear walls.

Shear Wall (Vertical Diaphragm): A wall designed to resist lateral forces parallel to the plane of the wall (sometimes referred to as a vertical diaphragm).

Wall System, Bearing: A structural system with bearing walls providing support for all or major portions of the vertical loads. Shear walls or braced frames provide seismic-force resistance.

Wind-Restraint System: The collection of structural elements that provides restraint of the seismic-isolated structure for wind loads. The wind-restraint system may be either an integral part of isolator units or a separate device.

Wood and Light Metal Framing:

Aspect Ratio: Ratio of height to width for vertical diaphragms, and width to depth for horizontal diaphragms.

Balloon Framing: Continuous stud framing from sill to roof, with intervening floor joists nailed to studs and supported by a let-in ribbon (see platform framing).

Cripple Wall: Short wall between foundation and first floor framing.

Cripple Studs: Short studs between header and top plate at opening in wall framing, or studs between base sill and sill of opening.

Decking: Solid sawn lumber or glued laminated decking, nominally 2 to 4 inches thick, and 4 inches and wider. Decking may be tongue-and-groove, or connected at longitudinal joints with nails or metal clips.

Edge Distance: The distance from the edge of the member to the center of the nearest fastener. When a member is loaded perpendicular to the grain, the loaded edge shall be defined as the edge in the direction toward which the fastener is acting.

Gypsum Wallboard or Drywall: An interior wall surface sheathing material sometimes considered for resisting lateral forces.

Hold-Down: Hardware used to anchor the vertical chord forces to the foundation or framing of the structure in order to resist overturning of the wall.

Panel: A sheet-type wood product.

Panel Rigidity or Stiffness: The in-plane shear rigidity of a panel, the product of panel thickness and modulus of rigidity.

Panel Shear: Shear stress acting through the panel thickness.

Platform Framing: Construction method in which stud walls are constructed one floor at a time, with a floor or roof joist bearing on top of the wall framing at each level.

Plywood: A structural panel comprising plies of wood veneer arranged in cross-aligned layers. The plies are bonded with an adhesive that cures upon application of heat and pressure.

Row of Fasteners: Two or more fasteners aligned with the direction of load.

Sheathing: Lumber or panel products that are attached to parallel framing members, typically forming wall, floor, ceiling, or roof surfaces.

Stud: Wood member used as vertical framing member in interior or exterior walls of a building,
usually 2" x 4" or 2" x 6" sizes, and precision end-trimmed.

Tie: See drag strut.

Tie-Down: Hardware used to anchor the vertical chord forces to the foundation or framing of the structure in order to resist overturning of the wall.

APPENDIX D
STRUCTURAL EXAMPLE PROBLEMS

This appendix illustrates the implementation of the provisions of this document for the seismic evaluation and rehabilitation of military buildings. These examples presume that geologic hazard studies for each building have been performed and that any identified hazard has been mitigated or resolved. Guidelines for geologic hazard studies are presented in Appendix F of TI 809-04 and examples of geologic studies are provided in Appendix G of that document. The example problems in the following sections of this Appendix were selected to represent various structural systems in representative existing military buildings.

D1. Three-story Barracks Building

D2. Two-story Steel Moment Frame Building

D3. One-story Building with Steel Roof Trusses

D4. Infilled Concrete Moment Frame Building

D5. One-story Steel Frame Building

D1 Three-story Barracks Building

Building & Site Data.

Building Description.

The H-shaped barracks (building 1452) is a three-story cast-in-place reinforced-concrete structure located at Fort Lewis, Washington (For this example only one of the two legs which form the H-shaped group of structures is considered). According to the available drawings obtained before and during the initial site visit, it was designed as a two-company barracks in 1956.

The barracks consist of four separate structures with 2-inch separation between adjacent structures. Dimensions of the structure considered in this example are approximately 39 feet by 117 feet (11.9 m by 35.7 m). The building is three stories with a story height of 10 feet each (3.1 m).

Vertical Load Resisting System. The vertical load resisting system consists of reinforced concrete flat slab and columns. The columns are nominally spaced at 19.5' (5.9 m) in both directions of building axes. The slab thickness is 7 inches (178 mm) at the roof, third, and second floor levels. The first floor slab is 4 inches (102 mm) thick concrete on grade. The footings consist of individual spread footings below the perimeter and interior columns. Strip footings support the transverse walls at the end of the structure and the partial CMU infills along the longitudinal walls.

The interior columns are 14-inch (356 mm) square with relatively light reinforcement and #3 ties at 12 inches (30.5 mm). The perimeter framing is a beam-column framing system. The perimeter columns at the ends of the frame are 12 inches by 18 inches (30.5 mm by 457 mm), while the interior columns of the perimeter frames measure 12 inches by 24 inches (30.5 mm by 610 mm) with the major axes oriented in the longitudinal axis of the structure. The beams at the roof level are 12 inches wide by 18 inches (30.5 mm by 457 mm) deep and the beams at the third and second floor levels are 10 inches wide by 15-1/2 inches (254 mm by 394 mm) deep.

Lateral Load Resisting System. The primary lateral-force resisting system consists of the concrete floors acting as diaphragms transmitting lateral forces to the perimeter frames. The lateral-force resisting frame system consists of rectangular columns and beams in the longitudinal direction. The transverse lateral-force resisting system consists of 8-inch (203mm) thick concrete shear walls at the ends of each structure. The spread and strip footing foundations resist shear forces through friction and passive soil pressure.

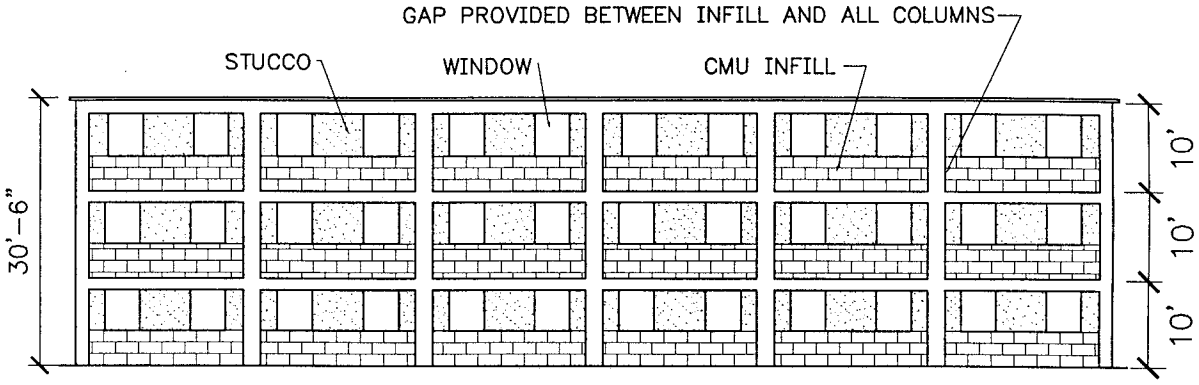

LONGITUDINAL BUILDING ELEVATION

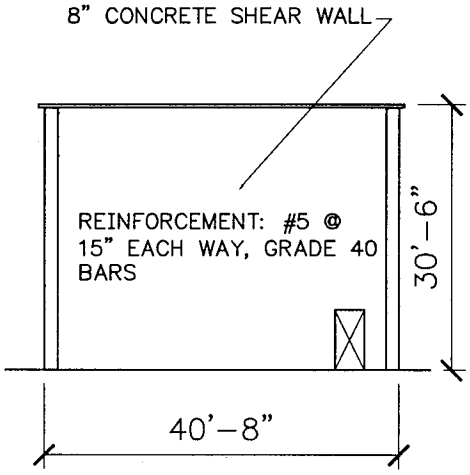

TRANSVERSE BUILDING ELEVATION

Note: 1 ft = 0.305 m
1 inch = 25.4 mm

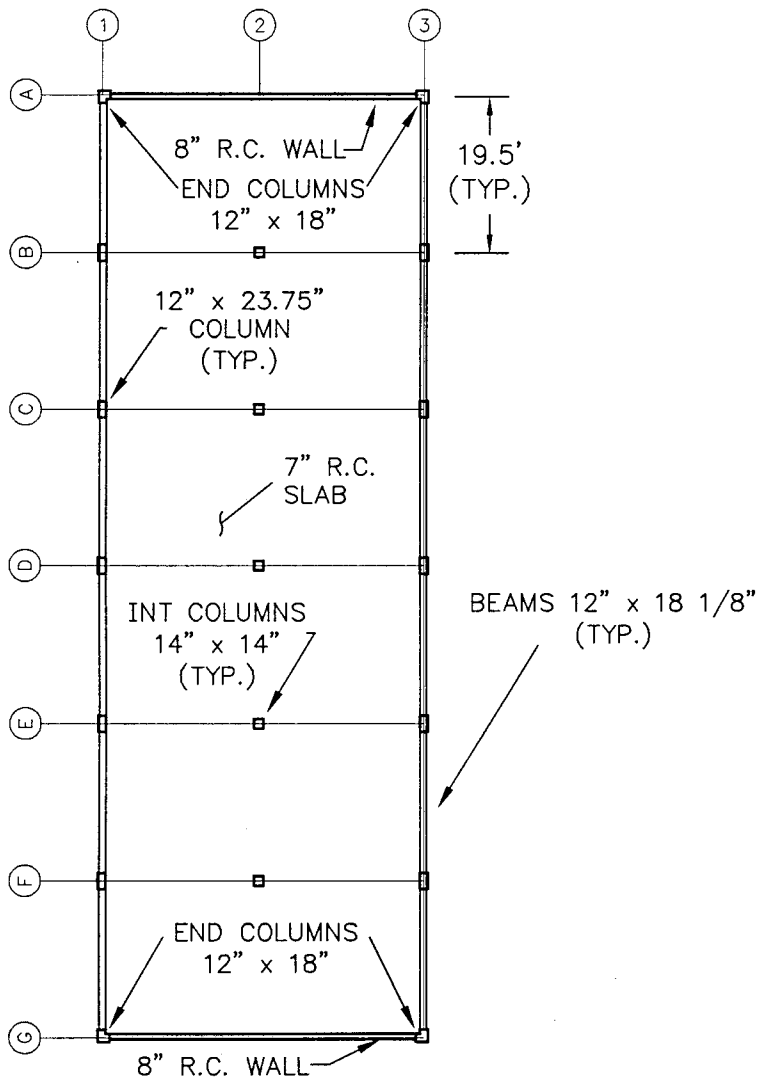

FRAMING @ ROOF LEVEL

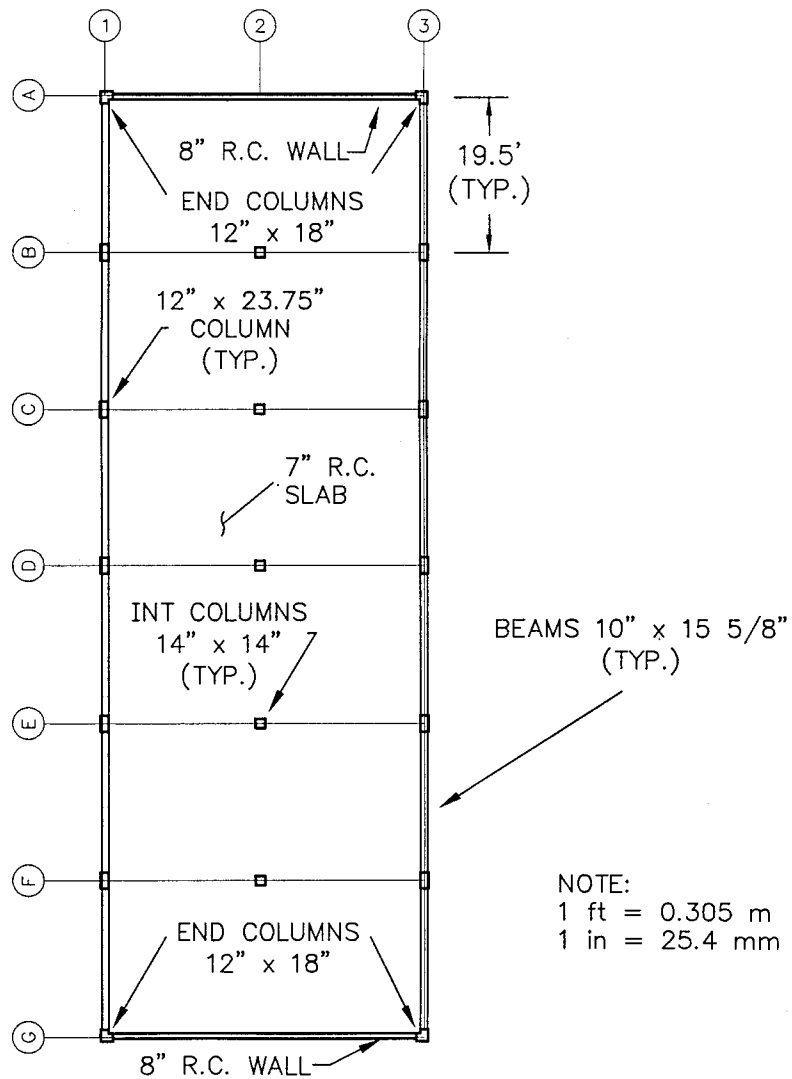

NOTE:
1 ft = 0.305 m
1 in = 25.4 mm

FRAMING @ SECOND & THIRD FLOOR LEVELS

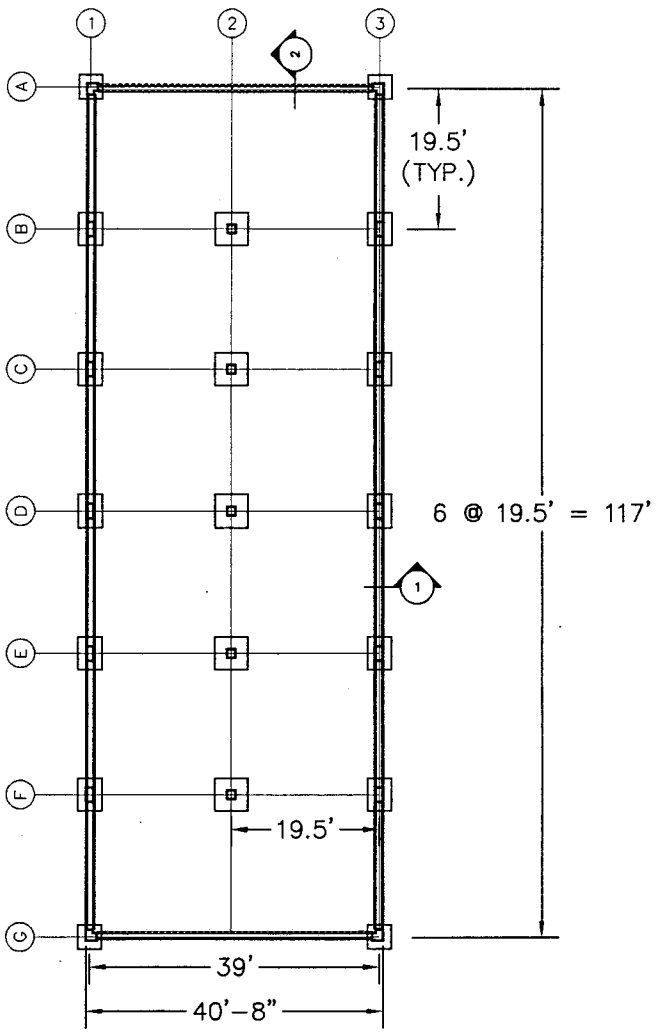

FOUNDATION PLAN

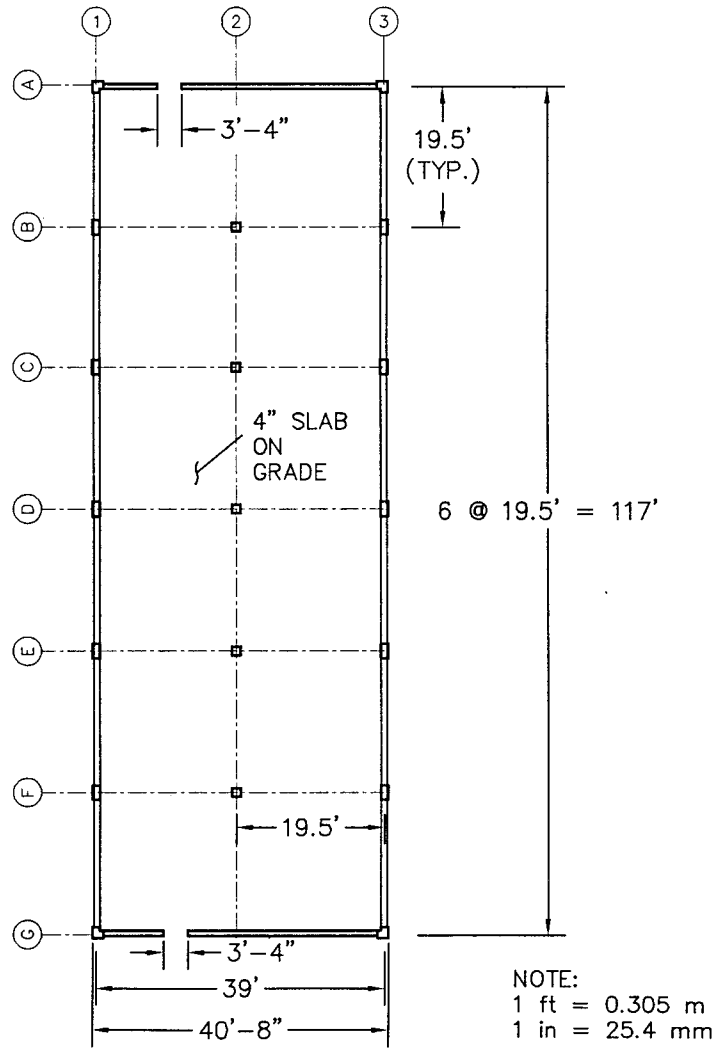

FIRST FLOOR PLAN SHOWING DOOR OPENINGS

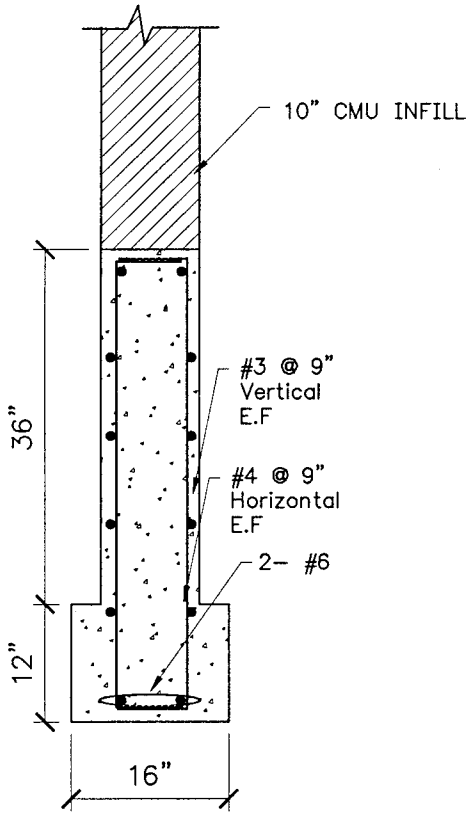

SECTION 1 THROUGH FOOTING

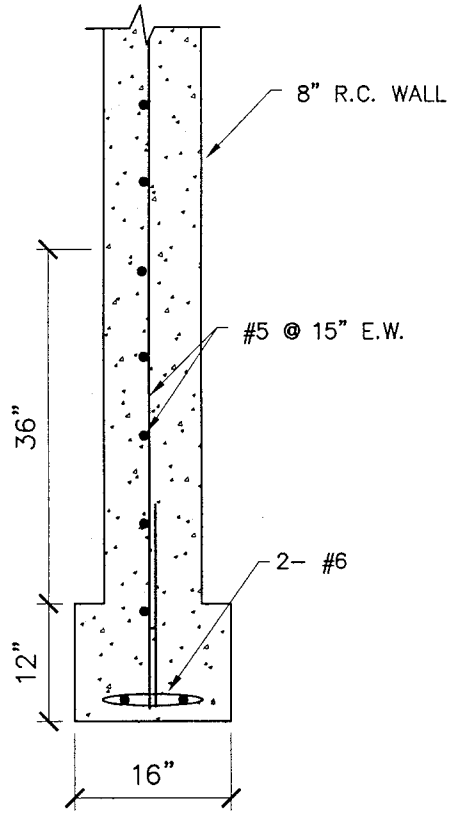

SECTION 2 THROUGH FOOTING

CONCRETE $f_c' = 3000$ psi

ALL STEEL $f_y = 40$ ksi

NOTE:
1 in = 25.4 mm
1 psi = 6.89 kPa

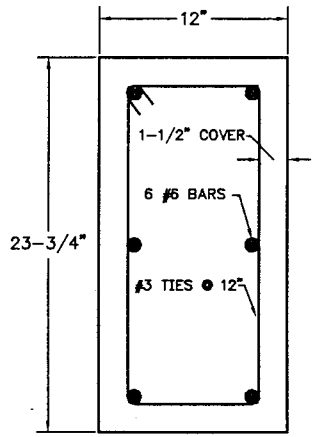

INTERIOR PERIMETER COLUMN

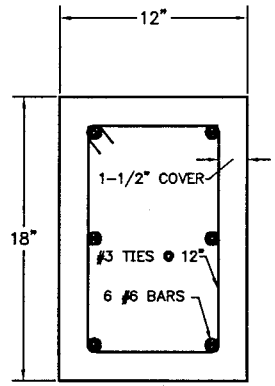

EXTERIOR PERIMETER COLUMN

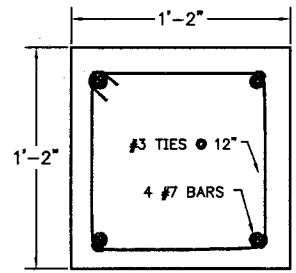

INTERIOR GRAVITY COLUMN

NOTE:
$f_c' = 3000$ psi
$f_y = 40$ ksi
1 in = 25.4 mm
1 psi = 6.89 kPa

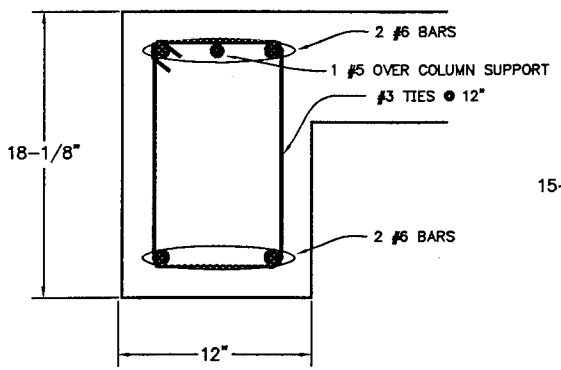

BEAMS AT ROOF

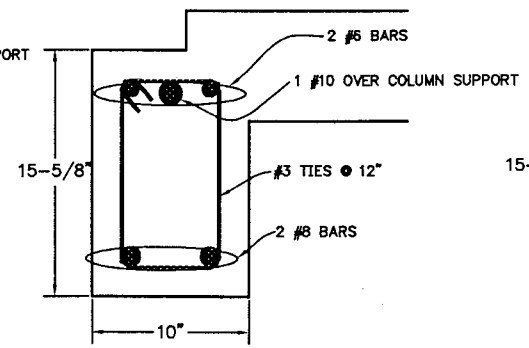

BEAMS @ SECOND AND THIRD FLOORS IN END BAYS

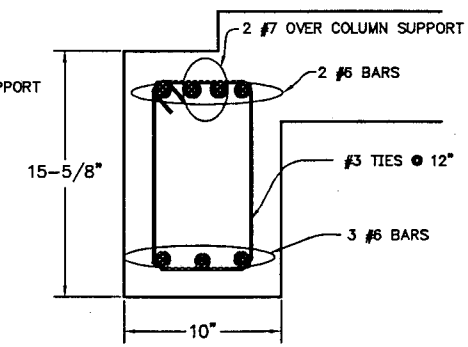

BEAMS @ SECOND AND THIRD FLOORS IN INTERMEDIATE BAYS

COLUMN AND BEAM CROSS SECTIONS

A. Preliminary Determinations (from Table 2-1)

1. Obtain building and site data:

a. Seismic Use Group. Since the building is not described by any of the occupancies in Table 2-2 for special, hazardous, or essential facilities, it is designated as a standard occupancy structure within Seismic Use Group I.

b. Structural Performance Level. This structure is to be analyzed for the Life Safety Performance Level as described in Table 2-3.

c. Applicable Ground Motions (Performance Objectives). Table 2-4 prescribes a ground motion of 2/3 MCE for the Seismic Use Group I, Life Safety Performance Level. The derivations of the ground motions are described in Chapter 3 of TI 809-04. The spectral accelerations are determined from the MCE maps for the given location.

(1) Determine the short-period and one-second period spectral response accelerations:

$S_S = 1.20$ g	(MCE Map No. 9)
$S_1 = 0.39$ g	(MCE Map No. 10)

(2) Determine the site response coefficients: A geotechnical report of the building site classifies the soil as Class D (See TI 809-04 Table 3-1). The site response coefficients are determined by interpolation of Tables 3-2a and 3-2b of TI 809-04.

$F_a = 1.02$	(TI 809-04 Table 3-2a)
$F_v = 1.62$	(TI 809-04 Table 3-2b)

(3) Determine the adjusted MCE spectral response accelerations:

$S_{MS} = F_a S_S = (1.02)(1.20) = 1.224$	(TI 809-04 Eq. 3-1)
$S_{M1} = F_v S_1 = (1.62)(0.39) = 0.632$	(TI 809-04 Eq. 3-2)
$S_{MS} \leq 1.5F_a = (1.5)(1.02) = 1.53 > 1.224$, use 1.224	(TI 809-04 Eq. 3-5)
$S_{M1} \leq 0.6F_v = (0.6)(1.62) = 0.96 > 0.632$, use 0.632	(TI 809-04 Eq. 3-6)

(4) Determine the design spectral response accelerations:

$S_{DS} = 2/3\ S_{MS} = (2/3)(1.224) = 0.82$	(TI 809-04 Eq. 3-3)
$S_{D1} = 2/3\ S_{M1} = (2/3)(0.632) = 0.42$	(TI 809-04 Eq. 3-4)

Enter FEMA 310 Table 2-1 with these values to determine the region of seismicity (this information is needed when completing the FEMA 310 checklists). It is determined that the site is in a region of high seismicity.

d. Determine seismic design category:

Seismic design category: D (based on S_{DS})	(Table 2-5a)
Seismic design category: D (based on S_{D1})	(Table 2-5b)

2. Screen for geologic hazards and foundations. Screening for hazards was performed in accordance with Paragraph F-3 of Appendix F in TI 809-04. It was determined that no hazards existed. Table 4-3 of this document requires that the geologic site hazard and foundation checklists contained in FEMA 310 be completed. See Section C, Structural Screening (Tier 1), for the completed checklist.

3. Evaluate geologic hazards. Not necessary.

4. Mitigate geologic hazards. Not Necessary.

B. Preliminary Structural Assessment (from Table 4-1)

At this point, after reviewing the drawings and conducting an on-site visual inspection of the building, a judgmental decision is made as to whether the building definitely requires rehabilitation without further evaluation or whether further evaluation might indicate that the building can be considered to be acceptable without rehabilitation.

1. Determine if building definitely needs rehabilitation without further evaluation. It is not obvious if the building definitely needs rehabilitation or not. There is a continuous load path and no obvious signs of structural distress. In the longitudinal direction the building frame system lacks ductile detailing but could possibly possess enough strength and stiffness due to the large column depth. In the transverse direction, the shear walls likely have the capacity to resist the lateral force demands. The building must be evaluated to determine if it is acceptable or if it needs rehabilitation.

2. Determine evaluation level required. FEMA 310 provides three tiers of evaluation that are described in paragraph 4-2 of this document. Buildings in Seismic Use Group I may be evaluated using a Tier 1 evaluation, provided the structure meets the requirements of FEMA 310 Table 3-3. If deficiencies are found a Tier 2 or Tier 3 evaluation will determine if the building is acceptable or needs rehabilitation. For evaluations performed in accordance with this document, a Tier 2 or Tier 3 evaluation may be performed in lieu of the Tier 1 evaluation, when it is considered that the lower tier evaluation would not produce conclusive results.

C. Structural Screening (Tier 1) (from Table 4-2)

1. Determine applicable checklists. Table 4-2 lists the required checklists for a Tier 1 evaluation based on Seismic Design Category. Seismic design category D buildings require completion of the Basic Structural, Supplemental Structural, Geologic Site Hazard & Foundation, Basic Nonstructural and Supplemental Nonstructural checklists. (Note: A nonstructural evaluation is not in the scope of this design example).

2. Complete applicable checklists. The checklists are taken from FEMA 310.

Geologic Site Hazards and Foundations Checklist (FEMA 310, Section 3.8)

Geologic Site Hazards

The following statements shall be completed for buildings in regions of high or moderate seismicity.

C	NC	N/A	LIQUEFACTION: Liquefaction susceptible, saturated, loose granular soils that could jeopardize the building's seismic performance shall not exist in the foundation soils at depths within 50 feet under the building for Life Safety and Immediate Occupancy (Tier 2: Sec. 4.7.1.1). *Geotechnical report states that there is no liquefaction hazard*
C	NC	N/A	SLOPE FAILURE: The building site shall be sufficiently remote from potential earthquake-induced slope failures or rockfalls to be unaffected by such failures or shall be capable of accommodating any predicted movements without failure (Tier 2: Sec. 4.7.1.2). *Geotechnical report states that there is no slope failure hazard*
C	NC	N/A	SURFACE FAULT RUPTURE: Surface fault rupture and surface displacement at the building site is not anticipated (Tier 2: Sec. 4.7.1.3). *Geotechnical report states that there is no surface fault rupture hazard*

Condition of Foundations

The following statement shall be completed for all Tier 1 building evaluations.

(C) NC N/A FOUNDATION PERFORMANCE: There shall be no evidence of excessive foundation movement such as settlement or heave that would affect the integrity or strength of the structure (Tier 2: Sec. 4.7.2.1). *No evidence of excessive foundation movement or settlement*

The following statement shall be completed for buildings in regions of high or moderate seismicity being evaluated to the Immediate Occupancy Performance Level.

C NC (N/A) DETERIORATION: There shall not be evidence that foundation elements have deteriorated due to corrosion, sulfate attack, material breakdown, or other reasons in a manner that would affect the integrity or strength of the structure (Tier 2: Sec. 4.7.2.2). *This building is being evaluated for the Life Safety Performance Level only.*

Capacity of Foundations

The following statement shall be completed for all Tier 1 building evaluations.

C NC (N/A) POLE FOUNDATIONS: Pole foundations shall have a minimum embedment depth of 4 ft. for Life Safety and Immediate Occupancy (Tier 2: Sec. 4.7.3.1). *There are no pole foundations.*

The following statements shall be completed for buildings in regions of high seismicity and for buildings in regions of moderate seismicity being evaluated to the Immediate Occupancy Performance Level.

(C) NC N/A OVERTURNING: The ratio of the effective horizontal dimension, at the foundation level of the lateral-force-resisting system, to the building height (base/height) shall be greater than $0.6S_a$ (Tier 2: Sec. 4.7.3.2). *$0.6S_a$ = (0.6)(0.82) = 0.49 (See the quick checks section following the checklists for determination of S_a. The height of the building ≈ 30 ft. Transverse: (base/height) = 39.67 / 30 = 1.32 > 0.49, OK Longitudinal: (base/height) = 117 / 30 = 3.9 > 0.49, OK*

(C) NC N/A TIES BETWEEN FOUNDATION ELEMENTS: The foundation shall have ties adequate to resist seismic forces where footings, piles, and piers are not restrained by beams, slabs, or soils classified as Class A, B, or C (Tier 2: Sec. 4.7.3.3). *Footings are restrained by slabs.*

C NC (N/A) DEEP FOUNDATIONS: Piles and piers shall be capable of transferring the lateral forces between the structure and the soil. This statement shall apply to the Immediate Occupancy Performance Level only (Tier 2: Sec. 4.7.3.4). *This building is being evaluated for the Life Safety Performance Level only.*

C NC (N/A) SLOPING SITES: The grade difference from one side of the building to another shall not exceed one-half the story height at the location of embedment. This statement shall apply to the Immediate Occupancy Performance Level only (Tier 2: Sec. 4.7.3.5). *This building is being evaluated for the Life Safety Performance Level only.*

Basic Structural Checklist for Building Type C1: Concrete Moment Frames (FEMA 310, Section 3.7.8)

Building System

(C)	NC	N/A	LOAD PATH: The structure shall contain one complete load path for Life Safety and Immediate Occupancy for seismic force effects from any horizontal direction that serves to transfer the inertial forces from the mass to the foundation (Tier 2: Sec. 4.3.1.1). *See Building Description.*
C	(NC)	N/A	ADJACENT BUILDINGS: An adjacent building shall not be located next to the structure being evaluated closer than 4% of the height for Life Safety and Immediate Occupancy (Tier 2: Sec. 4.3.1.2). *There is an adjacent building 2" from this structure. However, both structures are the same height and have matching floors. Pounding damage is likely to result only in nonstructural damage. Therefore, the small separation is not a concern.*
C	NC	(N/A)	MEZZANINES: Interior mezzanine levels shall be braced independently from the main structure, or shall be anchored to the lateral-force-resisting elements of the main structure (Tier 2: Sec. 4.3.1.3). *The building does not have any mezzanine levels.*
(C)	NC	N/A	WEAK STORY: The strength of the lateral-force-resisting system in any story shall not be less than 80% of the strength in an adjacent story above or below for Life-Safety and Immediate Occupancy (Tier 2: Sec. 4.3.2.1). *There is no story with a lateral strength less than 80% of an adjacent story.*
(C)	NC	N/A	SOFT STORY: The stiffness of the lateral-force-resisting system in any story shall not be less than 70% of the stiffness in an adjacent story above or below or less than 80% of the average stiffness of the three stories above or below for Life-Safety and Immediate Occupancy (Tier 2: Sec. 4.3.2.2). *The stiffness of the lateral-force resisting system in any story is not less than 70% of the stiffness in an adjacent story above or below or less than 80% of the average stiffness of the three stories above or below.*
(C)	NC	N/A	GEOMETRY: There shall be no changes in horizontal dimension of the lateral-force-resisting system of more than 30% in a story relative to adjacent stories for Life Safety and Immediate Occupancy, excluding one-story penthouses (Tier 2: Sec. 4.3.2.3). *There are no changes in the horizontal dimension of the lateral-force-resisting system.*
(C)	NC	N/A	VERTICAL DISCONTINUITIES: All vertical elements in the lateral-force-resisting system shall be continuous to the foundation (Tier 2: Sec. 4.3.2.4). *All of the columns and shear walls are continuous to the foundation.*
(C)	NC	N/A	MASS: There shall be no change in effective mass more than 50% from one story to the next for Life Safety and Immediate Occupancy (Tier 2: Sec. 4.3.2.5). *There are no changes in effective mass more than 50% from one story to the next.*

(C)	NC	N/A	TORSION: The distance between the story center of mass and the story center of rigidity shall be less than 20% of the building width in either plan dimension for Life Safety and Immediate Occupancy (Tier 2: Sec. 4.3.2.6). *The center of rigidity and the center of mass coincide due to the symmetry of the structure.*
(C)	NC	N/A	DETERIORATION OF CONCRETE: There shall be no visible deterioration of concrete or reinforcing steel in any of the vertical- or lateral-force-resisting elements (Tier 2: Sec. 4.3.3.4). *There is no visible deterioration of concrete or reinforcing steel in any of the vertical or lateral-force resisting elements.*
C	NC	(N/A)	POST-TENSIONING ANCHORS: There shall be no evidence of corrosion or spalling in the vicinity of post-tensioning or end fittings. Coil anchors shall not have been used (Tier 2: Sec. 4.3.3.5).

Lateral-Force-Resisting System

(C)	NC	N/A	REDUNDANCY: The number of lines of moment frames in each principal direction shall be greater than or equal to 2 for Life Safety and Immediate Occupancy. The number of bays of moment frames in each line shall be greater than or equal to 2 for Life Safety and 3 for Immediate Occupancy (Tier 2: Sec. 4.4.1.1.1). *There are two lines of moment frames in the longitudinal direction with 6 bays per frame line.*
(C)	NC	N/A	INTERFERING WALLS: All infill walls placed in moment frames shall be isolated from structural elements (Tier 2: Sec. 4.4.1.2.1). *Isolation joints of adequate dimensions provided between nonstructural wall at sides and top.*
C	(NC)	N/A	SHEAR STRESS CHECK: The shear stress in the concrete columns, calculated using the Quick Check procedure of Section 3.5.3.2, shall be less than 100 psi or $2(f'_c)^{1/2}$ for Life Safety and Immediate Occupancy (Tier 2: Sec. 4.4.1.4.1). *See Quick Checks section following checklists for calculation of shearing stress demand on columns of moment frames. Demand = 276 psi > Allowable = 100 psi*
(C)	NC	N/A	AXIAL STRESS CHECK: The axial stress due to gravity loads in columns subjected to overturning forces shall be less than $0.10f'_c$ for Life Safety and Immediate Occupancy. Alternatively, the axial stresses due to overturning forces alone, calculated using the Quick Check Procedure of Section 3.5.3.6, shall be less than $0.30f'_c$ for Life Safety and Immediate Occupancy (Tier 2: Sec. 4.4.1.4.2). *See Quick Checks section following checklists for calculation of axial load demand. Demand = 300 psi < Allowable = 900 psi, OK*

Connections

(C)	NC	N/A	CONCRETE COLUMNS: All concrete columns shall be doweled into the foundation for Life Safety and the dowels shall be able to develop the tensile capacity of the column for Immediate Occupancy (Tier 2: Sec. 4.6.3.2). *All of the concrete columns are doweled into the foundation.*

Supplemental Structural Checklist for Building Type C1: Concrete Moment Frames (FEMA 310, Section 3.7.8S)

Lateral-Force-Resisting System

(C)	NC	N/A	FLAT SLAB FRAMES: The lateral-force-resisting system shall not be a frame consisting of columns and a flat slab/plate without beams (Tier 2: Sec. 4.4.1.4.3). *The lateral-force-resisting systems consist of beam-column moment frames and shear walls.*
(C)	NC	N/A	PRESTRESSED FRAME ELEMENTS: The lateral-load-resisting frames shall not include any prestressed or post-tensioned elements (Tier 2: Sec. 4.4.1.4.4). *There are no prestressed frame elements in the building.*
(C)	NC	N/A	SHORT CAPTIVE COLUMNS: There shall be no columns at a level with height/depth ratios less than 50% of the nominal height/depth ratio of the typical columns at that level for Life Safety and 75% for Immediate Occupancy (Tier 2: Sec. 4.4.1.4.5). *There are no columns at a level with height/depth ratios less than 50% of the nominal height/depth ratio of the typical columns at that level.*
(C)	NC	N/A	NO SHEAR FAILURES: The shear capacity of frame members shall be able to develop the moment capacity at the top and bottom of the columns (Tier 2: Sec. 4.4.1.4.6). *See the quick checks section for this compliance check.*
(C)	NC	N/A	STRONG COLUMN/WEAK BEAM: The sum of the moment capacity of the columns shall be 20% greater than that of the beams at frame joints (Tier 2: Sec. 4.4.1.4.7). *The sum of the column moment capacities is more than 20% greater than that of the beams.*
C	(NC)	N/A	BEAM BARS: At least two longitudinal top and two longitudinal bottom bars shall extend continuously throughout the length of each frame beam. At least 25% of the longitudinal bars provided at the joints for either positive or negative moment shall be continuous throughout the length of the members for Life Safety and Immediate Occupancy (Tier 2: Sec. 4.4.1.4.8). *Bottom longitudinal bars are not continuous through joints.*
C	(NC)	N/A	COLUMN-BAR SPLICES: All column bar lap splice lengths shall be greater than 35 d_b for Life Safety and 50 d_b for Immediate Occupancy and shall be enclosed by ties spaced at or less than 8 d_b for Life Safety and Immediate Occupancy (Tier 2: Sec. 4.4.1.4.9). *Column bars are spliced for a length of 20d_b only.*
(C)	NC	N/A	BEAM-BAR SPLICES: The lap splices for longitudinal beam reinforcing shall not be located within $l_b/4$ of the joints and shall not be located within the vicinity of potential plastic hinge locations (Tier 2: Sec. 4.4.1.4.10). *The beam-bar splices are located at the beam midspan.*
C	(NC)	N/A	COLUMN-TIE SPACING: Frame columns shall have ties spaced at or

less than d/4 for Life Safety and Immediate Occupancy throughout their length and at or less than 8 d_b for Life Safety and Immediate Occupancy at all potential plastic hinge locations (Tier 2: Sec. 4.4.1.4.11). *Column-ties are spaced at 12" = d.*

C (NC) N/A STIRRUP SPACING: All beams shall have stirrups spaced at or less than d/2 for Life Safety and Immediate Occupancy throughout their length. At potential plastic hinge locations stirrups shall be spaced at or less than the minimum of 8 d_b or d/4 for Life Safety and Immediate Occupancy (Tier 2: Sec. 4.4.1.4.12). *Typical stirrup spacing @ 12" for both 12" and 10" wide beams.*

C (NC) N/A JOINT REINFORCING: Beam-column joints shall have ties spaced at or less than $8d_b$ for Life Safety and Immediate Occupancy (Tier 2: Sec. 4.4.1.4.13). *No transverse ties in beam-column joints.*

C NC (N/A) JOINT ECCENTRICITY: There shall be no eccentricities larger than 20% of the smallest column plan dimension between girder and column centerlines. This statement shall apply to the Immediate Occupancy Performance Level only (Tier 2: Sec. 4.4.1.4.14). *This building is being evaluated for the Life Safety Performance Level only*

C NC (N/A) STIRRUP AND TIE HOOKS: The beam stirrups and column ties shall be anchored into the member cores with hooks of 135° or more. This statement shall apply to the Immediate Occupancy Performance Level only (Tier 2: Sec. 4.4.1.4.15). *This building is being evaluated for the Life Safety Performance Level only.*

(C) NC N/A DEFLECTION COMPATIBILITY: Secondary components shall have the shear capacity to develop the flexural strength of the elements for Life Safety and shall have ductile detailing for Immediate Occupancy (Tier 2: Sec. 4.4.1.6.2). *See the quick checks section for compliance check of this statement.*

(C) NC N/A FLAT SLABS: Flat slabs/plates classified as secondary components shall have continuous bottom steel through the column joints for Life Safety. Flat slabs/plates shall not be permitted for the Immediate Occupancy Performance Level (Tier 2: Sec. 4.4.1.6.3).

Diaphragms

(C) NC N/A DIAPHRAGM CONTINUITY: The diaphragms shall not be composed of split-level floors. In wood buildings, the diaphragms shall not have expansion joints (Tier 2: Sec. 4.5.1.1). *There are no split-level floors.*

C NC (N/A) PLAN IRREGULARITIES: There shall be tensile capacity to develop the strength of the diaphragm at re-entrant corners or other locations of plan irregularities. This statement shall apply to the Immediate Occupancy Performance Level only (Tier 2: Sec. 4.5.1.7). *This building is being evaluated for the Life Safety Performance Level only*

C NC (N/A) DIAPHRAGM REINFORCEMENT AT OPENINGS: There shall be reinforcing around all diaphragm openings larger than 50% of the building width in either major plan dimension. This statement shall

apply to the Immediate Occupancy Performance Level only (Tier 2: Sec. 4.5.1.8). *This building is being evaluated for the Life Safety Performance Level only*

Connections

C	NC	N/A	LATERAL LOAD AT PILE CAPS: Pile caps shall have top reinforcement and piles shall be anchored to the pile caps for Life Safety, and the pile cap reinforcement and pile anchorage shall be able to develop the tensile capacity of the piles for Immediate Occupancy (Tier 2: Sec. 4.6.3.10). *No pile foundations in structure.*

Basic Structural Checklist for Building Type C2: Concrete Shear Wall Buildings with Stiff Diaphragms (FEMA 310, Section 3.7.9)

Building System

C	NC	N/A	LOAD PATH: The structure shall contain one complete load path for Life Safety and Immediate Occupancy for seismic force effects from any horizontal direction that serves to transfer the inertial forces from the mass to the foundation (Tier 2: Sec. 4.3.1.1). *See Building Description.*
C	NC	N/A	MEZZANINES: Interior mezzanine levels shall be braced independently from the main structure, or shall be anchored to the lateral-force-resisting elements of the main structure (Tier 2: Sec. 4.3.1.3). *There are no mezzanines in the structure.*
C	NC	N/A	WEAK STORY: The strength of the lateral-force-resisting-system in any story shall not be less than 80% of the strength in an adjacent story, above or below, for Life Safety and Immediate Occupancy (Tier 2: Sec. 4.3.2.1). *There is no story with a lateral strength less than 80% of an adjacent story*
C	NC	N/A	SOFT STORY: The stiffness of the lateral-force-resisting-system in any story shall not be less than 70% of the stiffness in an adjacent story above or below, or less than 80% of the average stiffness of the three stories above or below for Life Safety and Immediate Occupancy (Tier 2: Sec. 4.3.2.2). *The stiffness of the lateral-force resisting system in any story is not less than 70% of the stiffness in an adjacent story above or below or less than 80% of the average stiffness of the three stories above or below*
C	NC	N/A	GEOMETRY: There shall be no changes in horizontal dimension of the lateral-force-resisting system of more than 30% in a story relative to adjacent stories for Life Safety and Immediate Occupancy, excluding one-story penthouses (Tier 2: Sec. 4.3.2.3). *There are no changes in the horizontal dimension of the lateral-force-resisting system.*
C	NC	N/A	VERTICAL DISCONTINUITIES: All vertical elements in the lateral-force-resisting system shall be continuous to the foundation (Tier 2: Sec. 4.3.2.4). *All of the columns and shear walls are continuous to the foundation.*
C	NC	N/A	MASS: There shall be no change in effective mass more than 50% from one story to the next for Life Safety and Immediate Occupancy (Tier 2: Sec. 4.3.2.5). *There are no changes in effective mass more than 50% from one story to the next.*
C	NC	N/A	TORSION: The distance between the story center of mass and the story center of rigidity shall be less than 20% of the building width in either plan dimension for Life Safety and Immediate Occupancy (Tier 2: Sec. 4.3.2.6). *The center of rigidity and the center of mass coincide due to the symmetry of the structure.*

(C)	NC	N/A	DETERIORATION OF CONCRETE: There shall be no visible deterioration of concrete or reinforcing steel in any of the vertical- or lateral-force-resisting elements (Tier 2: Sec. 4.3.3.4). *There is no visible deterioration of concrete or reinforcing steel in any of the vertical or lateral-force resisting elements.*
C	NC	(N/A)	POST-TENSIONING ANCHORS: There shall be no evidence of corrosion or spalling in the vicinity of post-tensioning or end fittings. Coil anchors shall not have been used (Tier 2: Sec. 4.3.3.5). *None used in building.*
(C)	NC	N/A	CONCRETE WALL CRACKS: All existing diagonal cracks in wall elements shall be less than 1/8" for Life Safety and 1/16" for Immediate Occupancy, shall not be concentrated in one location, and shall not form an X pattern (Tier 2: Sec. 4.3.3.9).

Lateral-Force-Resisting System

(C)	NC	N/A	COMPLETE FRAMES: Steel or concrete frames classified as secondary components shall form a complete vertical load carrying system (Tier 2: Sec. 4.4.1.6.1). *See building description.*
(C)	NC	N/A	REDUNDANCY: The number of lines of shear walls in each principal direction shall be greater than or equal to 2 for Life Safety and Immediate Occupancy (Tier 2: Sec. 4.4.2.1.1). *There are two shear walls in the transverse direction.*
(C)	NC	N/A	SHEAR STRESS CHECK: The shear stress in the concrete shear walls, calculated using the Quick Check procedure of Section 3.5.3.3, shall be less than 100 psi or $2(f'_c)^{1/2}$ for Life Safety and Immediate Occupancy (Tier 2: Sec. 4.4.2.2.1). *See quick checks section for calculations, v_{avg} = 75 psi < 100 psi*
(C)	NC	N/A	REINFORCING STEEL: The ratio of reinforcing steel area to gross concrete area shall be greater than 0.0015 in the vertical direction and 0.0025 in the horizontal direction for Life Safety and Immediate Occupancy. The spacing of reinforcing steel shall be equal to or less than 18" for Life Safety and Immediate Occupancy (Tier 2: Sec. 4.4.2.2.2). *See quick checks section for check of compliance*

Connections

(C)	NC	N/A	TRANSFER TO SHEAR WALLS: Diaphragms shall be reinforced and connected for transfer of loads to the shear walls for Life Safety and the connections shall be able to develop the shear strength of the walls for Immediate Occupancy (Tier 2: Sec. 4.6.2.1). *The diaphragms are reinforced and doweled into walls and longitudinal beams.*
(C)	NC	N/A	WALL REINFORCING: Walls shall be doweled into the foundation for Life Safety and the dowels shall be able to develop the strength of the walls for Immediate Occupancy (Tier 2: Sec. 4.6.3.5). *The walls are doweled into the foundation*

Supplemental Structural Checklist for Building Type C2: Concrete Shear Wall Buildings with Stiff Diaphragms (FEMA 310, Section 3.7.9S)

Lateral-Force-Resisting System

(C)	NC	N/A	DEFLECTION COMPATIBILITY: Secondary components shall have the shear capacity to develop the flexural strength of the elements for Life Safety and shall have ductile detailing for Immediate Occupancy (Tier 2: Sec. 4.4.1.6.2). *See quick checks section for check of compliance*
(C)	NC	N/A	FLAT SLABS: Flat slabs/plates classified as secondary components shall have continuous bottom steel through the column joints for Life Safety. Flat slabs/plates shall not be permitted for the Immediate Occupancy Performance Level (Tier 2: Sec. 4.4.1.6.3).
C	NC	(N/A)	COUPLING BEAMS: The stirrups in all coupling beams over means of egress shall be spaced at or less than d/2 and shall be anchored into the core with hooks of 135° or more for Life Safety and Immediate Occupancy. In addition, the beams shall have the capacity in shear to develop the uplift capacity of the adjacent wall for Immediate Occupancy (Tier 2: Sec. 4.4.2.2.3). *No coupling beams*
C	NC	(N/A)	OVERTURNING: All shear walls shall have aspect ratios less than 4 to 1. Wall piers need not be considered. This statement shall apply to the Immediate Occupancy Performance Level only (Tier 2: Sec. 4.4.2.2.4). *This building is being evaluated for the Life Safety Performance Level only*
C	NC	(N/A)	CONFINEMENT REINFORCING: For shear walls with aspect ratios greater than 2.0, the boundary elements shall be confined with spirals or ties with spacing less than 8 d_b. This statement shall apply to the Immediate Occupancy Performance Level only (Tier 2: Sec. 4.4.2.2.5). *This building is being evaluated for the Life Safety Performance Level only*
C	NC	(N/A)	REINFORCING AT OPENINGS: There shall be added trim reinforcement around all wall openings. This statement shall apply to the Immediate Occupancy Performance Level only (Tier 2: Sec. 4.4.2.2.6). *This building is being evaluated for the Life Safety Performance Level only*
C	NC	(N/A)	WALL THICKNESS: Thickness of bearing walls shall not be less than 1/25 the minimum unsupported height or length, nor less than 4". This statement shall apply to the Immediate Occupancy Performance Level only (Tier 2: Sec. 4.4.2.2.7). *This building is being evaluated for the Life Safety Performance Level only*

Diaphragms

(C)	NC	N/A	DIAPHRAGM CONTINUITY: The diaphragms shall not be composed of split-level floors. In wood buildings, the diaphragms shall not have expansion joints (Tier 2: Sec. 4.5.1.1). *There are no split-level floors.*

(C)	NC	N/A	OPENINGS AT SHEAR WALLS: Diaphragm openings immediately adjacent to the shear walls shall be less than 25% of the wall length for Life Safety and 15% of the wall length for Immediate Occupancy (Tier 2: Sec. 4.5.1.4). *There are no openings immediately adjacent to the shear walls or openings greater than 25% of the wall length.*
C	NC	(N/A)	PLAN IRREGULARITIES: There shall be tensile capacity to develop the strength of the diaphragm at re-entrant corners or other locations of plan irregularities. This statement shall apply to the Immediate Occupancy Performance Level only (Tier 2: Sec. 4.5.1.7). *This building is being evaluated for the Life Safety Performance Level only*
C	NC	(N/A)	DIAPHRAGM REINFORCEMENT AT OPENINGS: There shall be reinforcing around all diaphragm openings larger than 50% of the building width in either major plan dimension. This statement shall apply to the Immediate Occupancy Performance Level only (Tier 2: Sec. 4.5.1.8). *This building is being evaluated for the Life Safety Performance Level only*

Connections

C	NC	(N/A)	LATERAL LOAD AT PILE CAPS: Pile caps shall have top reinforcement and piles shall be anchored to the pile caps for Life Safety, and the pile cap reinforcement and pile anchorage shall be able to develop the tensile capacity of the piles for Immediate Occupancy (Tier 2: Sec. 4.6.3.10). *No pile foundations used in structure*

Quick Checks:

The pseudo lateral force is needed to complete some of the quick check statements (shearing stress check of columns, axial stress due to overturning in columns, and shear stress check of shear walls) triggered by the Tier 1 checklists.

Determination of Pseudo Lateral Force (per FEMA 310 Section 3.5.2.1)

Building Period (per FEMA 310 Section 3.5.2.4)

$T = C_t h_n^{3/4}$ (FEMA 310 Eq. 3-7)

$h_n = 30.6'$ (9.3 m)

Transverse Direction:
$C_t = 0.020$ (Reinforced Concrete Shear Walls)
$T = 0.020(30.6)^{3/4} = 0.26$ seconds

Longitudinal Direction:
$C_t = 0.030$ (Reinforced Concrete Moment Frames)
$T = 0.030(30.6)^{3/4} = 0.39$ seconds

Determine Building Seismic Weight

	Unit Weight (psf)	Unit Wall Weight (plf)	Total Area (ft.^{2})	Total Wall Length (ft.)	Total Weight (kips)
Roof Diaphragm Level					
Weight of Roof	120.0	---	4641	---	557.2
Exterior Longitudinal Walls	---	378	---	210	79.4
Exterior Transverse Walls	---	500	---	79.3	39.7
Total Roof Tributary Weight					***676.2***
Third Floor Diaphragm Level					
Weight of Floor	140.6	---	4641	---	652.5
Exterior Longitudinal Walls	---	602	---	210	126.4
Exterior Transverse Walls	---	1000	---	79.3	79.3
Total Third Floor Tributary Weight					***858.2***
Second Floor Diaphragm Level					
Weight of Floor	140.6	---	4641	---	652.8
Exterior Longitudinal Walls	---	602	---	210	126.4
Exterior Transverse Walls	---	1000	---	79.3	79.3
Total Second Floor Tributary Weight					***858.5***

Total Seismic Weight of Building ***2393***

10645 kN

Determine Mapped Spectral Acceleration (per FEMA 310 Section 3.5.2.3.1)

$S_a = S_{D1} / T$, but Sa shall not exceed S_{DS} (FEMA 310 Eq. 3-4)

$S_{DS} = 0.82$ $S_{D1} = 0.42$ (previously calculated in Preliminary Determinations Section)

Transverse Direction:
$S_a = 0.42 / 0.26 = 1.62 > S_{DS} = 0.82$, use $S_a = 0.82$

Longitudinal Direction:
$S_a = 0.42 / 0.39 = 1.08 > S_{DS} = 0.82$, use $S_a = 0.82$

Determine Pseudo Lateral Force

$V = CS_aW$ (FEMA 310 Eq. 3-1)

Transverse Direction:
C = 1.1 (Shear wall building with 3 stories) (FEMA 310 Table 3-4)
V = (1.1)(0.82)(2393 kips) = 2158 kips (9599 kN)

Longitudinal Direction:
C = 1.0 (Moment frame building with 3 stories) (FEMA 310 Table 3-4)
V = (1.0)(0.82)(2393 kips) = 1962 kips (8727 kN)

Determine Story Shear Forces (per FEMA 310 Section 3.5.2.2)

$$V_j = \left(\frac{n+j}{n+1}\right)\left(\frac{W_j}{W}\right)V$$ (FEMA 310 Eq. 3-3)

	j	W_i (kips)	Transverse V_i (kips)	Longitudinal V_i (kips)
Third Story	3	676	915	832
Second Story	2	1534	1730	1573
First Story	1	2393	2158	1962

1 kip = 4.448 kN

Longitudinal Direction: Concrete Moment Frames

Shearing Stress Check of Columns (per FEMA 310 Section 3.5.3.2)

"SHEAR STRESS CHECK: The shear stress in the concrete columns, calculated using the Quick Check procedure of Section 3.5.3.2, shall be less than 100 psi or $2(f'_c)^{1/2}$ for Life Safety and Immediate Occupancy."

The average shear stress, v_{avg}, in the columns of concrete frames shall be computed as:

$$v_{avg} = \frac{1}{m}\left(\frac{n_c}{n_c - n_f}\right)\left(\frac{V_j}{A_c}\right)$$ (FEMA 310 Eq. 3-10)

$2\sqrt{f'_c} = 2\sqrt{3000} = 110$psi (758 kPa) > 100 psi (689 kPa), use 100 psi for allowable stress

A_c = 10(23.75" x 12") + 4(18" x 12") = 3714 in^2 (2.40 m^2) ((Total cross-sectional column area)

$$v_{avg} = \frac{1}{2}\left(\frac{14}{14-2}\right)\left(\frac{1962k}{3714\,in^2}\right)\left(\frac{1000\ lb}{1\,kip}\right) = 308\,psi\,(2122\ kPa) > 100\ psi\ (689\ kPa),\ \textbf{No Good}$$

Axial Stress Due to Overturning (per FEMA 310 Section 3.5.3.6):

"AXIAL STRESS CHECK: The axial stress due to gravity loads in columns subjected to overturning forces shall be less than $0.10f'_c$ for Life Safety and Immediate Occupancy. Alternatively, the axial stresses due to overturning forces alone, calculated using the Quick Check Procedure of Section 3.5.3.6, shall be less than $0.30f'_c$ for Life Safety and Immediate Occupancy."

Check exterior perimeter frame column (12" x 18" = 216 in^2, 1394 cm^2)

The axial stress of columns subjected to overturning forces, p_{ot}, shall be calculated as:

$$p_{ot} = \frac{1}{m}\left(\frac{2}{3}\right)\left(\frac{Vh_n}{Ln_f}\right) = \frac{1}{2}\left(\frac{2}{3}\right)\left(\frac{(1962\,k)(30.6')}{(117')(2\ frames)}\right) = 86\,kips\ (383\ kN) \qquad \text{(FEMA 310 Eq. 3-14)}$$

Axial Stress = p_{ot} / Area = (86 kips)(1000 lb / kip) / (216 in^2) ≈ 400 psi (2756 kPa)
Allowable Stress = 0.3 f_c' = (0.3)(3000 psi) = 900 psi (6201 kPa)> 400 psi, **OK**

No Shear Failures of Columns

"NO SHEAR FAILURES: The shear capacity of frame members shall be able to develop the moment capacity at the top and bottom of the columns"

The probable flexural moment strength, M_{pr}, of typical interior columns of perimeter frame is calculated based on the nominal capacity (with a capacity reduction factor, ϕ, equal to unity), and with reinforcement exhibiting strain hardening to an ultimate strength = $1.25f_y$ = 1.25(40ksi) = 50 ksi (345 MPa) (FEMA 310 Section 4.2.4.4 gives guidance on determination of member component strengths.) Calculate maximum column shear, V_e, associated with formation of plastic hinges at both ends of the column (M_{pr} at each end). Compare V_e with the column shear capacity, ϕV_n. Note: This mechanism may not form due to strong column-weak beam condition but gives an upper bound to the shear demand.

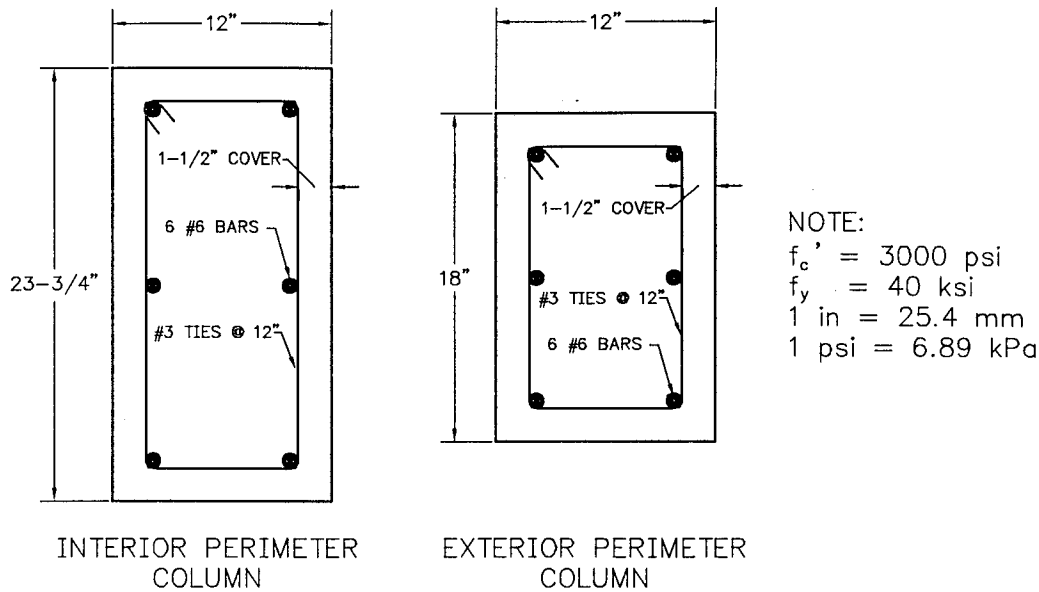

The columns are checked at the base level. The axial loads are highest in the first story columns, increasing their flexural capacities. The higher flexural capacities increase the flexural-shear demand on the columns.

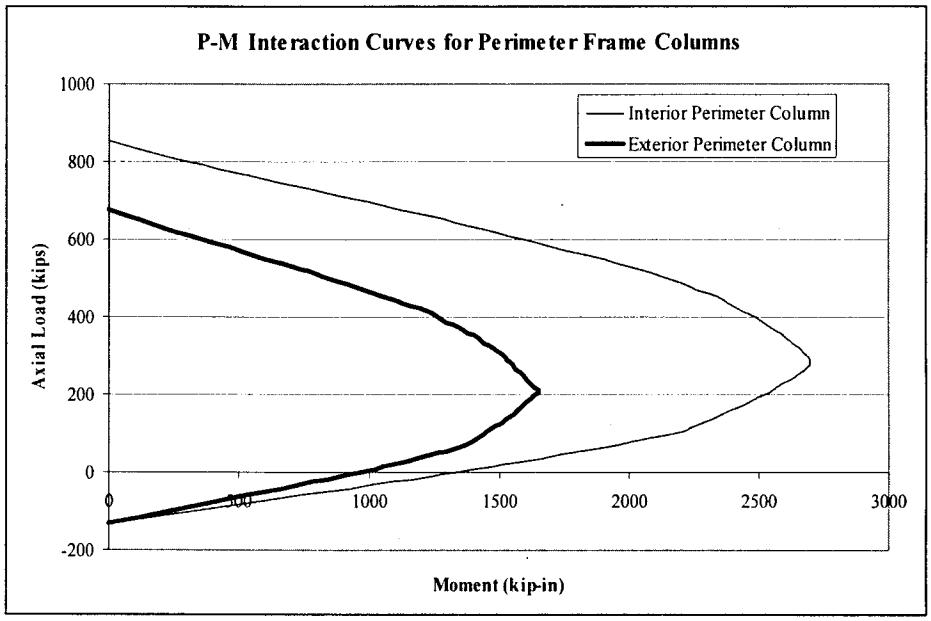

Interior Perimeter Columns

The flexural strengths of the columns and beams are calculated with the computer program BIAX.

M_{pr} of interior perimeter column (from BIAX) = 190 k-ft (258 kN-m) (@ Axial load of 130 kips = gravity load on column; calculation of axial loads not shown)

$V_e = 2M_{pr} / L = 2(190 \text{ kip-ft}) / (9') = 42.2$ kips (188 kN) (Assuming a clear column height = 9')

(Note: This shear value, 42.2 kips, is greater than the column shear determined for the joint shear, 20 kips, in the Tier 2 analysis to follow. The 20 kips value corresponds to the formation of a beam hinging mechanism. At this point, it is unknown whether this condition is satisfied or not. Therefore, use the 42.2 kips value to be conservative.)

Determine Column Shear Capacity, ϕV_n (per ACI 318)

For this check, ϕ=1.0 (No strength reduction factor)

$\phi V_n = \phi(V_c + V_s)$ (ACI 318 Eq. 11-2)

$$V_c = 2\left(1+\frac{N_u}{2000A_g}\right)\sqrt{f_c'}\,b_w d \qquad \text{(ACI 318 Eq. 11-4)}$$

$$= 2\left(1+\frac{130000}{2000(12''\text{x}23.75'')}\right)\sqrt{3000}(12'')(21.5'') = 34.7\text{kips (126 kN)}$$

$$V_s = \frac{A_v f_y d}{s} = \frac{2(0.11\text{in}^2)(40\text{ksi})(23.75''-1.5''-.375''-.75''/2)}{12''} = 15.8\text{kips (70.3 kN)} \qquad \text{(ACI 318 Eq. 11-15)}$$

$V_n = V_c + V_s$ = 34.7 k + 15.8 k = 50.5 kips (225 kN) > V_e = 42.2 kips (188 kN), **OK**

Exterior Perimeter Columns

M_{pr} of exterior column (from BIAX) = 115 k-ft (156 kN-m) (@ Axial load of 70 kips, calculation of axial loads not shown)

$V_e = 2M_{pr} / L$ = 2(115 kip-ft) / (9')= 26 kips (116 kN) (Assuming a clear column height = 9')

$\phi V_n = \phi(V_c + V_s)$ (ACI 318 Eq. 11-2)

$$V_c = 2\left(1+\frac{N_u}{2000A_g}\right)\sqrt{f_c'}\,b_w d \qquad \text{(ACI 318 Eq. 11-4)}$$

$$= 2\left(1+\frac{70000}{2000(12''\text{x}18'')}\right)\sqrt{3000}(12'')(15.5'') = 23.7\text{kips (105 kN)}$$

$$V_s = \frac{A_v f_y d}{s} = \frac{2(0.11\text{in}^2)(40\text{ksi})(18''-1.5''-.375''-.75''/2)}{12''} = 11.6\text{kips (52 kN)} \qquad \text{(ACI 318 Eq. 11-15)}$$

$V_n = V_c + V_s$ = 23.7 k + 11.6 k = 35.3 kips (157 kN) > V_e = 26 kips (116 kN), **OK**

Strong Column / Weak Beam

Compare the sum of the beam moment capacities to that of the column moment capacities.

$$\frac{\sum M_{pr(col)}}{\sum M_{pr(beam)}} \geq 1.2$$

The moment capacities are determined assuming the steel exhibits elasto-plastic behavior with an expected yield strength of $f_{ye} = 1.25\ f_y = 1.25(40\ \text{ksi}) = 50$ ksi and an ultimate concrete strain capacity, $\varepsilon_{cu} = 0.003$. The beam and column capacities were determined using the BIAX computer program. The bottom steel in the beams is not continuous through the beam-column joints, however, for this check it is conservatively assumed that the bottom steel is able to be fully developed. The columns at the roof level are not checked since a column mechanism at the roof level will not lead to collapse of the structure. The column flexural capacities are calculated at an axial load equal to the tributary gravity loads.

3rd floor level

Assume that the slab contributes to the moment strength of the beams. The effective compression zone width is determined per ACI 318 Section 8.10.3; The effective compression zone width shall not exceed:
(a) 1/12 the span length of the beam = 1/12 (19.5')(12"/1') = 19.5" (495 mm) (governs)
(b) six times the slab thickness = 6(7") = 42"
(c) one-half the clear distance to the next web = (1/2)(39'-8")(12"/1') = 238"

The beam flexural strengths were determined assuming no axial load in members.

Positive Moment Strength = 1237 kip-in (140 kN-m)
Negative Moment Strength = 1184 kip-in (134 kN-m)
M_{beam} = (1237 kip-in) + (1184 kip-in) = 2421 kip-in (274 kN-m)

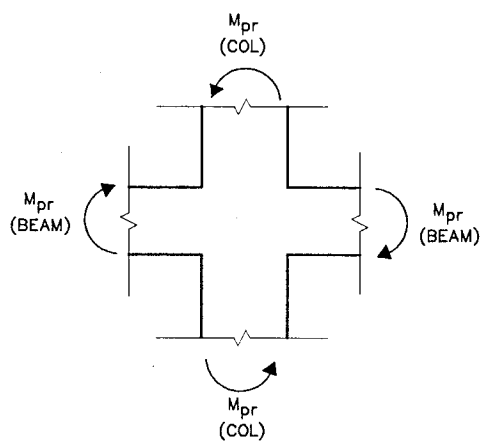

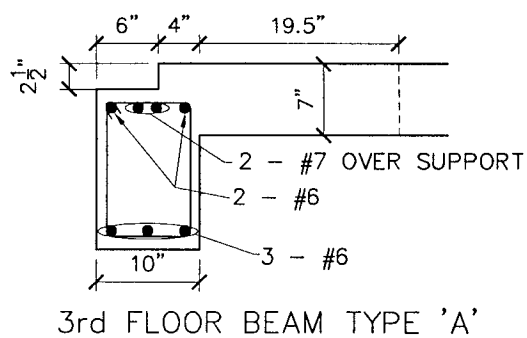

Flexural strength at bottom of column at 3rd floor level.

The column flexural capacity is determined assuming the members carry gravity loads from the roof. (See "No shear failure" section for column cross-section).

$M_{col@bottom}$ = 1699 kip-in (192 kN-m) (at an axial load of 31 kips)

The column flexural strength below the joint is higher due to the increased column axial loads imposed by the floor slab.

$M_{col@top}$ = 1993 kip-in (225 kN-m) (at an axial load of 75 kips)

$1.2\Sigma M_{beam} = 1.2(2421 \text{ kip-in}) = 2905 \text{ kip-in } (328 \text{ kN-m})$
$\Sigma M_{col} = (1699 \text{ kip-in}) + (1993 \text{ kip-in}) = 3692 \text{ kip-in } (417 \text{ kN-m}) > 2905 \text{ kip-in } (328 \text{ kN-m})$, **OK**

Deflection Compatibility:

"DEFLECTION COMPATIBILITY: Secondary components shall have the shear capacity to develop the flexural strength of the elements for Life Safety and shall have ductile detailing for Immediate Occupancy (Tier 2: Sec. 4.4.1.6.2)."

The interior gravity columns are checked to determine if they have the shear capacity available to develop the flexural strength of the elements. Calculate probable flexural moment strength, M_{pr}, of typical interior columns with capacity reduction factor, ϕ, equal to unity and with reinforcement exhibiting strain hardening to an ultimate strength = $1.25f_y$ = 1.25(40ksi) = 50 ksi. Calculate maximum column shear, V_e, associated with formation of plastic hinges at both ends of the column (M_{pr} at each end). Compare V_e with the column shear capacity, ϕV_n. The program BIAX was used to calculate the flexural capacity of the column.

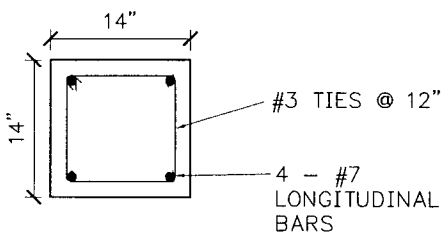

Axial Load on Column = 200 kips (890 kN)
From BIAX, M_p = 1248 kip-in = 104 kip-ft (141 kN-m)
$V_e = 2M_p / L$ = 2(104 kip-ft) / (9'-4") = 22.3 kips (99 kN) (Assuming a clear column height = 9'-4")

Determine Column Shear Capacity, ϕV_n (per ACI 318)

$\phi V_n = \phi(V_c + V_s)$ with ϕ=1.0 (ACI 318 Eq. 11-2)

$$V_c = 2\left(1+\frac{N_u}{2000A_g}\right)\sqrt{f_c'}\,b_w d \qquad \text{(ACI 318 Eq. 11-4)}$$

$$= 2\left(1+\frac{200000}{2000(14"\text{x}14")}\right)\sqrt{3000}(14")(11.5") = 26.6\text{kips } (118 \text{ kN})$$

$$V_s = \frac{A_v f_y d}{s} = \frac{2(0.11\text{in}^2)(40\text{ksi})(14"-1.5"-.375"-.875"/2)}{12"} = 8.6\text{kips} \qquad \text{(ACI 318 Eq. 11-15)}$$

$V_n = V_c + V_s$ = 26.6 k + 8.6 k = 35.2 kips (157 kN) > V_e = 22.3 kips (99 kN), OK

Transverse Direction: Reinforced Concrete Shear Walls

Shear stress in shear walls (per FEMA 310 Section 3.5.3.3)

"SHEAR STRESS CHECK: The shear stress in the concrete shear walls, calculated using the Quick Check procedure of Section 3.5.3.3, shall be less than 100 psi or $2(f'_c)^{1/2}$ for Life Safety and Immediate Occupancy."

The average shear stress in shear walls, v_{avg}, shall be calculated as:

$$v_{avg} = \frac{1}{m}\left(\frac{V_j}{A_w}\right) \qquad \text{(FEMA 310 Eq. 3-11)}$$

The walls are checked at the base level;

V_j = 2158 kips (9599 kN) (base shear in the transverse direction)
A_w = 2(40.67'-3.33')(12"/1')(8") = 7169 in^2 (4.63 m^2)
m = 4.0 (FEMA 310 Table 3-7)

$$v_{avg} = \frac{1}{4}\left(\frac{2158\text{kips}}{7169\text{in}^2}\right)\left(\frac{1000\text{ lb}}{\text{kip}}\right) = 75\text{psi (517 kPa)} < 100\text{ psi (689 kPa), OK}$$

Reinforcing steel

"REINFORCING STEEL: The ratio of reinforcing steel area to gross concrete area shall be greater than 0.0015 in the vertical direction and 0.0025 in the horizontal direction for Life Safety and Immediate Occupancy. The spacing of reinforcing steel shall be equal to or less than 18" for Life Safety and Immediate Occupancy."

The 8" thick concrete walls are reinforced with #5 bars at 15" each way.

A_b = 0.31 in.^{2}

$\rho_v = \rho_h$ = (0.31 in.^{2}) / (8")(15") = 0.0026 > 0.0025, OK

Spacing < 18", OK

3. *Evaluate screening results (Summary of Tier 1 deficiencies)*

ADJACENT BUILDINGS: *There is an adjacent building 2" from this structure. However, both structures are the same height and have matching floors. Pounding damage is likely to result only in nonstructural damage. Therefore, the small separation is not a concern.*

SHEAR STRESS CHECK: The shear stress in the concrete columns, calculated using the Quick Check procedure of Section 3.5.3.2, shall be less than 100 psi or $2(f'_c)^{1/2}$ for Life Safety and Immediate Occupancy (Tier 2: Sec. 4.4.1.4.1). *See Quick Checks section following checklists for calculation of shearing stress demand on columns of moment frames. Demand = 276 psi > Allowable = 100 psi*

BEAM BARS: *The bottom longitudinal bars are not continuous through the joints. Therefore, the beams will be unable to develop their full positive strength at the joint interface.*

COLUMN BAR SPLICES: *The column longitudinal bar splices extend for a length of 20 d_b only. This is less than the required 35 d_b splice length. However, the column bars are spliced at midheight of the second floor. This area of the columns is not likely to see inelastic actions.*

COLUMN TIE SPACING: *The column ties are spaced at 12". This large spacing leads to lack of concrete confinement, increases the buckling length of the longitudinal steel and weakens laps. These conditions lead to reduced column ductility.*

STIRRUP SPACING: *The beam stirrups are spaced at 12". This large spacing leads to lack of concrete confinement and increases the buckling length of the longitudinal steel. These conditions lead to reduced beam ductility.*

JOINT REINFORCING: *There is no joint reinforcement at the beam-column joints.*

The above deficiencies indicate that the concrete moment frames are lacking ductile detailing and may not be able to carry gravity loads after being subjected to several cycles of inelastic deformations. The columns also fail the shear stress check. However, the structure may have sufficient capacity to resist the imposed seismic loading; therefore, the building will be subjected to a Tier 2 analysis to investigate the above deficiencies and determine if the building is acceptable or needs rehabilitation. Buildings designated for a Tier 2 evaluation based on results from a Tier 1 screening may be evaluated by a "deficiencies only" or "full-building evaluation" (per Section 5.1.b.(1)). FEMA 310 Section 3.4 states that for buildings not requiring a Full-Building Tier 2 evaluation, a Deficiency-Only Tier 2 evaluation may be conducted if potential deficiencies are identified by the Tier 1 evaluation. FEMA 310 Table 3-3 gives guidance on when a Full-Building Tier 2 evaluation is to be conducted. For this structure, the Tier 1 investigation identified the potential deficiencies, and a "Deficiencies Only" Tier 2 evaluation is conducted.

All of the statements pertaining to the concrete shear walls are found to be true. Therefore, the shear wall system in the transverse direction is acceptable.

D. Preliminary Nonstructural Assessment (from Table 4-4)

Nonstructural assessment is not in the scope of this example.

E. Nonstructural Screening (Tier 1) (from Table 4-5)

Nonstructural assessment is not in the scope of this example.

F. Structural Evaluation (Tier 2) (from Table 5-1)

1. Select appropriate analytical procedure. The building is analyzed using the linear static procedure described in Section 4.2.2 of FEMA 310 for ease of calculations. Limitations on the use of this procedure are found in paragraph 5-2 of TI 809-04.

2. Determine applicable ground motion. For Seismic Use Group I and the Life Safety Performance Level the ground motion specified in Table 2-4 is 2/3 MCE.

3. Perform structural analysis. The steps required for the LSP are laid out in Section 4.2.2.1 of FEMA 310.

- *Develop a mathematical model of the building in accordance with Sec. 4.2.3 of FEMA 310.*

The building is analyzed using a two-dimensional model with rigid diaphragms. Torsional effects resulting from the eccentricity between the centers of mass and the centers of rigidity are sufficiently small so as to be ignored. Therefore, only an accidental torsion of 5% of the horizontal dimension is considered. This analysis only considers the moment frames as the transverse walls were determined to have sufficient capacity based on the Tier 1 analysis. The walls are much stiffer than the frames. Therefore, it is assumed that the torsional forces are resisted entirely by the walls with no torsional forces resisted by the moment frames. Torsional effects are therefore neglected for the Tier 2 analysis of the concrete moment frames.

- *Calculate the pseudo lateral force in accordance with Sec. 4.2.2.1.1 of FEMA 310.*

(1) Period. The period in the longitudinal direction was determined previously to be 0.39 seconds (see Quick Checks section).

(2) Pseudo Lateral Force. The pseudo lateral force in the longitudinal direction was determined to be 1962 kips (8727 kN) (see Quick Checks section).

- *Distribute the lateral forces vertically in accordance with Sec. 4.2.2.1.2 of FEMA 310.*

The pseudo lateral force shall be distributed vertically in accordance with the equations:

$$F_x = C_{vx} V \qquad \text{(FEMA 310 Eq. 4-2)}$$

$$C_{vx} = \frac{w_x h_x^k}{\sum_{i=1}^{n} w_i h_i^k} \qquad \text{(FEMA 310 Eq. 4-3)}$$

where k = 1.0 for a building period of 0.39 seconds.

Level	w_x (kips)	h_x (ft)	$w_x h_x$ (kip-ft)	C_{vx}	F_x (kips)	
Roof	676.2	30	20286	0.441	865	(3848 kN)
3rd Floor	858.2	20	17165	0.373	732	(3256 kN)
2nd Floor	858.5	10	8585	0.186	366	(1628 kN)
		$\Sigma =$	46036	1.0		

- *Determine the building and component forces and displacements.*

Modeling Assumptions:

- The building is modeled assuming rigid diaphragm action. (Equal deflections at top of each column at a particular level)

- Modulus of Elasticity of Concrete; (use the ACI 318 method for determining E)
  $E = 57000\sqrt{f_c'} = 57000\sqrt{3000} = 3.12 \times 10^3$ ksi (ACI 318 Sec. 8.5.1)
  Concrete strength indicated on drawings, $f_c' = 3000$ psi (20.7 MPa)

- Effective Concrete Stiffness Values
  Stiffness of reinforced concrete components depends on material properties (including current condition), component dimensions, reinforcement quantities, boundary conditions, and stress levels. The calculation of a member's effective stiffness directly from principles of basic mechanics is impractical in most cases. FEMA 273 provides guidance for calculation of member stiffness for evaluation of concrete structures in Section 6.4.1.2. Table 6-4 of FEMA 273 provides effective stiffness values for a variety of reinforced concrete components, and is used here for ease of calculations.

Beams:	Flexural Rigidity = $0.5E_cI_g$	Shear Rigidity = $0.4E_cA_w$
Columns in compression:	Flexural Rigidity = $0.7E_cI_g$	Shear Rigidity = $0.4E_cA_w$
Columns in tension:	Flexural Rigidity = $0.5E_cI_g$	Shear Rigidity = $0.4E_cA_w$

- Component Gravity Loads
  $Q_G = 1.2\ Q_D + 0.5\ Q_L + 0.2\ Q_S$ (Eq. 7-1)
  FEMA 310 Section 4.2.4.2 states that $Q_S = 0.0$ where the design snow load is less than 30 psf. (Note: Eq. 7-1 is different than FEMA 310 Equation 4-6. This document uses the gravity load combination specified in ASCE 7 rather than the FEMA equation.)

  $Q_G = 0.9\ Q_D$ (FEMA 310 Eq. 4-7)

  Q_D = Dead load
  $Q_{D\ roof}$ = 1568 plf (22.9 kN / m)
  $Q_{D\ 3rd}$ = 1997 plf (29.1 kN / m)
  $Q_{D\ 2nd}$ = 1997 plf (29.1 kN /m)

  Q_L = Design live load
  $Q_{L\ roof}$ = 198 plf (2.89 kN / m)
  $Q_{L\ 3rd}$ = 496 plf (7.24 kN / m)
  $Q_{L\ 2nd}$ = 496 plf (7.24 kN / m)

– Q_E = Earthquake load

Actions shall be classified as either deformation-controlled or force-controlled. Guidance for classifying components is given in FEMA 310 Section 4.2.4.3. Due to symmetry, each of the frames in the longitudinal direction resists ½ of the longitudinal base shear:

Deformation-controlled actions:
Actions controlled by deformations include the moment demand in the columns and beams.

$Q_{E\ roof}$ = ½(865 kips) = 433 kips
$Q_{E\ 3rd}$ = ½(732 kips) = 366 kips
$Q_{E\ 2nd}$ = ½(366 kips) = 183 kips

Force-controlled actions:
Force-controlled actions include beam and column shear, shear in joints, and column axial demand. FEMA 310 Section 4.2.4.3.2 lists two methods for determining the force-controlled demands on components (Three methods are actually specified, however, method 3 is only to be used when the pseudo lateral force is calculated using FEMA 310 Equation 3-2, which was not used for the pseudo lateral force in this design example.) Method 1 states that force-controlled actions, Q_{UF}, shall be calculated as the sum of forces due to gravity and the maximum force that can be delivered by deformation-controlled actions. This method is used to check joint shear. Method 2 states that force-controlled actions may be calculated according to:

$$Q_{UF} = Q_G \pm \frac{Q_E}{CJ} \qquad \text{(FEMA 310 Eq. 4-9)}$$

$$Q_{UF} = Q_G \pm \frac{Q_E}{C} \qquad \text{(FEMA 310 Eq. 4-10)}$$

Equation 4-9 shall be used when the forces contributing to Q_{UF} are delivered by yielding components of the seismic framing system. Equation 4-10 shall be used for all other cases. The beam and column shear forces, and the column axial loads are delivered by yielding components of the seismic framing system. For these actions Equation 4-9 is used, producing earthquake demands for these force-controlled actions equal to those for deformation controlled actions divided by the term CJ. Therefore, the force-controlled earthquake actions are evaluated as Q_E / CJ.

C = 1 in the longitudinal direction (See Quick Checks Section)
$J = 1.5 + S_{DS} < 2.5$; $J = 1.5 + 0.82 = 2.32 < 2.50$ (FEMA 310 Eq. 4-11)

$Q_{E\ roof}$ / CJ = (433 kips) / (1.0)(2.32) = 187 kips (832 kN)
$Q_{E\ 3rd}$ / CJ = (366 kips) / (1.0)(2.32) = 158 kips (703 kN)
$Q_{E\ 2nd}$ / CJ = (183 kips) / (1.0)(2.32) = 79 kips (351 kN)

Analysis Results

The structure was analyzed using a 2-D frame analysis with the RISA-3D computer software. Results of the analysis are tabulated below.

Deformation controlled actions:

Deformation-controlled design actions, Q_{UD}, are calculated according to:
$Q_{UD} = Q_G \pm Q_E$ (FEMA 310 Eq. 4-8)

Results from RISA 3-D computer analysis: (Only the most critical demands are shown from the load combinations $1.2Q_D + 0.5Q_L + 1.0Q_E$ and $0.9Q_D + 1.0Q_E$

Deformation-Controlled Actions

Element	Axial Load[1] (kips)	Positive Bending Demand (kip-ft)	Negative Bending Demand[2] (kip-ft)	Nominal Capacity for Positive Bending [3] (kip-ft)	Nominal Capacity for Negative Bending [3] (kip-ft)
Exterior Perimeter Columns in Tension					
1st Story	-62	682	682	24	24
2nd Story	-41	300	300	38	38
3rd Story	-22	302	302	51	51
Exterior Perimeter Columns in Compression					
1st Story	174	707	707	125	125
2nd Story	113	361	361	114	114
3rd Story	53	386	386	95	95
Typical Interior Perimeter Columns					
1st Story	136	1554	1554	178	178
2nd Story	88	700	700	153	153
3rd Story	41	687	687	121	121
Typical Beam at End Bay[4]					
1st Story	---	452	-302	81	-81
2nd Story	---	437	-286	81	-81
3rd Story	---	411	-288	53	-59
Typical Beam at Interior Bay[4]					
1st Story	---	452	-300	86	-80
2nd Story	---	438	-286	86	-80
3rd Story	---	412	-286	59	-59

Notes:

1. Axial load is neglected for check of beams in frames
2. Due to symmetry, negative and positive bending demands on columns are equal
3. Nominal bending capacities are calculated assuming the given axial load is present on the member. Capacities calculated using BIAX program. The columns are spliced at midheight of the second floor. The moments are low at the midheight of the columns so no reduction in flexural capacity is considered due to the short splice length.
4. The beam bottom steel is embedded into the joints for only 11 inches. This is less than the required tensile development length for the bars. Therefore, the flexural strength of the bottom bars at the joints is limited to a fraction of the specified yield strength of 40 ksi. FEMA 273 Section 6.4.5 gives guidance for this situation. The limit to the bottom steel stress from FEMA 273 Eq. 6-2 becomes:

$$f_s = \frac{2500}{d_b} l_e \le f_y \text{, where } l_e = 11"$$

#6 bars: $f_s = 37$ ksi
#8 bars: $f_s = 27.5$ ksi

Force-Controlled Actions

Element	Axial Load Demand (kips)	Shear Demand[3] (kips)	Nominal Axial Load Capacity (kips)[1]	Nominal Shear Capacity (kips)[2]
Exterior Perimeter Columns in Tension				
1st Story	-3	29	-95	12
2nd Story	-3	22	-95	12
3rd Story	-3	10	-95	12
Exterior Perimeter Columns in Compression				
1st Story	112	37	520	38
2nd Story	72	35	520	36
3rd Story	33	25	520	34
Typical Interior Perimeter Columns				
1st Story	135	71	660	50
2nd Story	87	58	660	48
3rd Story	40	30	660	46
Typical Beam at End Bay				
1st Story	---	40	---	10
2nd Story	---	40	---	10
3rd Story	---	35	---	12
Typical Beam at Interior Bay				
1st Story	---	40	---	10
2nd Story	---	40	---	10
3rd Story	---	35	---	12

1 kip = 4.448 kN

Notes:
1. Nominal Axial Load Capacity: The axial load capacities of the columns are calculated using ACI 318 equations (no strength reduction factors are used since the evaluation uses the nominal strength, not the reduced design strength).

$P_n = 0.80\left[0.85f_c^{'}\left(A_g - A_{st}\right) + f_y A_{st}\right]$ (for compression members) (ACI 318 Eq. 10-2)

$P_n = f_s A_{st}$ (for tension members)

where f_s is reduced from f_y to account for short lap splices.
The longitudinal column reinforcement is lapped 15". The development length of #6 bars is 16.5" (per ACI 318 Chapter 12).
$f_s = (l_b / l_d)(f_y) = (15" / 16.5")(40\text{ ksi}) = 36\text{ ksi}$ (248 MPa) (FEMA 273 Eq. 6-1)

Exterior perimeter columns: (12" x 18" with 6- #6, $A_s = 6 \times 0.44\text{in.}^2 = 2.64\text{ in.}^2$, $A_g = 12" \times 18" = 216\text{in.}^2$)
Compression: $P_n = 0.80[0.85(3\text{ksi})(216\text{in}^2\text{-}2.64\text{in.}^2) + (40\text{ksi})(2.64\text{in}^2)] = 520$ kips (2330 kN)

Tension: $P_n = (36\text{ ksi})(2.64\text{ in}^2) = 95$ kips (423 kN) (tension)

Interior perimeter columns: (12" x 23.75" with 6-#6 bars, $A_s = 2.64$ in.^{2}, $A_g = 12" \times 23.75" = 285$ in.^{2})
Compression: $P_n = 0.80[0.85(3\text{ksi})(285\text{in}^2 - 2.64\text{in.}^2) + (40\text{ksi})(2.64\text{in}^2)] = 660$ kips (2936 kN)
Tension: No interior perimeter columns in tension

2. Nominal Shear Capacity: The shear capacities of the columns are calculated using ACI 318 equations (no strength reduction factors are used since the evaluation uses the nominal strength, not the reduced design strength).

$V_n = V_c + V_s$ (ACI 318 Eq. 11-2)

For members subject to axial compression,

$$V_c = 2\left(1 + \frac{N_u}{2000A_g}\right)\sqrt{f'_c}\,b_w d$$ (ACI 318 Eq. 11-4)

For members subject to significant axial tension, (ACI 318 Sec. 11.3.1.3)
$V_c = 0$ kips
For members subject to shear and flexure only,

$$V_c = 2\sqrt{f'_c}\,b_w d$$ (ACI 318 Eq. 11-3)

(Note: The above equations are used to determine the contribution of concrete to the shear capacity of the frame members. V_c should be taken = 0 in locations of potential plastic hinging in the beam members.)

$V_s = A_v f_y d / s$ (ACI 318 Eq. 11-15)
All members tied with #3 ties @ 12", $A_s = 2(0.11\text{in.}^2) = 0.22\text{in.}^2$

Exterior perimeter columns: (d = 18" – 1.5" – 0.375" – ½(6/8)" = 15.75")
$V_s = (0.22\text{ in.}^2)(40\text{ ksi})(15.75") / 12" = 11.6$ kips (51.6 kN)
Compression: Use ACI 318 Eq. 11-4 to determine V_c with given axial load (calcs not shown)
Tension: $V_c = 0$ kips

Interior perimeter columns: (d = 23.75" – 1.5" – 0.375" – ½(6/8)" = 21.5")
$V_s = (0.22\text{ in.}^2)(40\text{ ksi})(21.5") / 12" = 15.8$ kips (70.3 kN)
Compression: Use ACI 318 Eq. 11-4 to determine V_c with given axial load (calcs not shown)
Tension: $V_c = 0$ kips

Beams at roof level: (d = 18.125" – 1.5" – 0.375" – ½(6/8)" = 15.88")
$V_s = (0.22\text{ in.}^2)(40\text{ ksi})(15.88") / 12" = 11.6$ kips (51.6 kN)
$V_n = 11.6$ kips + 0 = 11.6 kips (51.6 kN)

Beams at 3rd and 2nd floor levels: (d = 15.625" – 1.5" – 0.375" – ½(6/8)" = 13.38")
$V_s = (0.22\text{ in.}^2)(40\text{ ksi})(13.38") / 12" = 9.8$ kips (43.6 kN)
$V_n = 9.8$ kips + 0 = 9.8 kips (43.6 kN)

3. The column shear forces are from the load combination $Q_{UF} = Q_G \pm \frac{Q_E}{CJ}$. The values shown in the table are different from the column shear values shown below for the determination of joint shear forces. The values in the table are more conservative and are used for the evaluation of the column shear.

Joint Shear Forces

Joint shear forces are calculated based on development of flexural plastic hinges in adjacent framing members. Therefore, the longitudinal reinforcing steel in the beams is assumed to be stressed to $1.25f_y$. (Note: The bottom longitudinal bars are not capable of developing their full tensile capacity due to the short embedment length into the beam-column joints. However, it is conservatively assumed that they are capable of developing the 1.25 f_y value.) Calculation of the beam capacities, Mp_{beam}, were done using the computer program BIAX.

Shear strength of joint: $Q_{cl} = \lambda\gamma A_j\sqrt{f_c'}$, where: (FEMA 310 Sec. 4.4.1.4.13)

$\lambda = 1.0$ for normal weight concrete
$\gamma = 10$ for interior joints without transverse beams
$\gamma = 6$ for exterior joints without transverse beams
$\gamma = 4$ for corner joints
These γ values correspond to $\rho'' < 0.003$ since there is no transverse reinforcement in the beam-column joints.

Typical exterior joint at roof level: (A_{st} = 2-#6 and 1-#5 = 1.19 in.^{2})

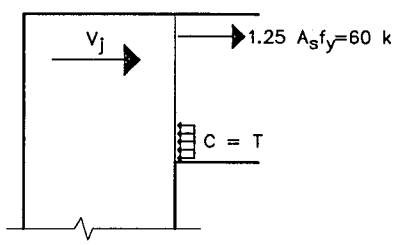

$V_j = 1.25A_{st}f_y = 1.25(1.19\text{in.}^2)(40\text{ksi}) = 60$ kips (267 kN)
$A_j = (18")(12") = 216$ in.^{2}
$Q_{cl} = (1.0)(4.0)\sqrt{3000}(216) = 47$ kips (209 kN)

Typical interior joint at roof level: (A_{st} = 1.19 in.^{2}, A_{sb} = 2-#6 = 0.88 in.^{2})

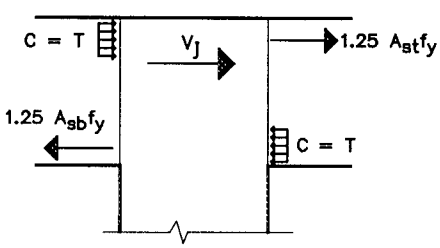

$V_j = 1.25A_{st}f_y + 1.25A_{sb}f_y = 1.25(1.19\text{in.}^2 + 0.88\text{in.}^2)$ (40 ksi) = 104 kips 463 kN)
$A_j = (23.75")(12") = 285$ in.^{2}
$Q_{cl} = (1.0)(10)\sqrt{3000}(285) = 156$kips (694 kN)

Typical ext. joint at 3rd floor level: (A_{st} = 2-#6 and 1-#10 = 2.11 in.^{2})

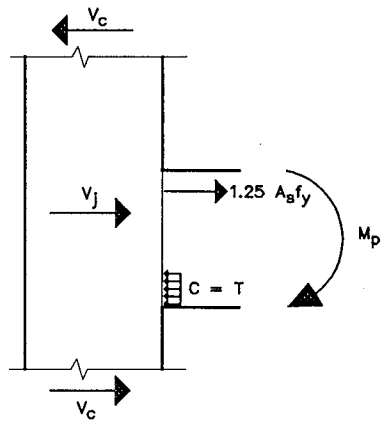

$V_{col} = M_{p\,beam}$ / col. clear ht. = 1203 kip-in / 120" = 10 kips (44.5 kN)
$V_j = 1.25f_y(A_{st}) - V_{col} = (1.25)(40\text{ ksi})(2.11\text{ in.}^2) - 10\text{ kips} = 96$ kips (427 kN)
$A_j = (18")(12") = 216\text{ in.}^2$
$Q_{cl} = (1.0)(6.0)\sqrt{3000}(216) = 71\text{kips}\,(316\text{ kN})$

Typical int. joint at 3rd floor level: (A_{st} =2-#6 and 2-#7 = 2.08 in.^{2}, A_{sb} = 3-#6 = 1.32 in.^{2})

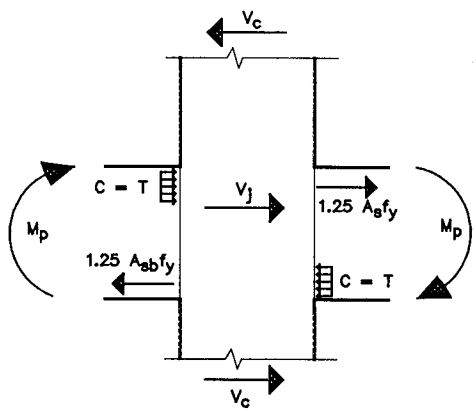

$V_{col} = (Mp^+_{beam} + Mp^-_{beam})$/ col. clear ht. = (1237 kip-in + 1184 kip-in) / 120" = 20 kips (89 kN)
$V_j = 1.25f_y(A_{st} + A_{sb}) - V_{col} = (1.25)(40\text{ ksi})(2.08\text{ in.}^2 + 1.32\text{ in.}^2) - 20\text{ kips} = 150$ kips (667 kN)
$A_j = (23.75)(12") = 285\text{ in.}^2$
$Q_{cl} = (1.0)(10)\sqrt{3000}(285) = 156\text{kips}\,(694\text{ kN})$

4. *Acceptance criteria*

a. *Linear static procedure, LSP.* A deficiency only evaluation is completed for the building.

(1) Deformation-controlled actions. The deformation-controlled actions include bending of the frame members. Acceptance of deformation-controlled elements is based on:

$$Q_{CE} \geq \frac{Q_{UD}}{m}, \text{ where:} \qquad \text{(FEMA 310 Eq. 4-12)}$$

Q_{UD} = Action due to gravity and earthquake loading per FEMA 310 Section 4.2.4.3.1.
m = Component demand modifier from FEMA 310 Table 4-4
Q_{CE} = Expected strength of the component at deformation level under consideration.

Q_{CE} = The nominal strength of the element multiplied by 1.25 per FEMA 310 Section 4.2.4.4

Beam flexure (primary components): m = 2.5
Column flexure (primary components): m = 1.5

	Q_{UD}		Q_{CE}		$(Q_{UD}/m) / Q_{CE}$[2]	
Element	Positive Bending Demand (kipft)	Negative Bending Demand (kipft)	Expected Strength for Positive Bending[1] (kipft)	Expected Strength for Negative Bending[1] (kipft)	Acceptance for Positive Bending	Acceptance for Negative Bending
Exterior Columns in Tension, m = 1.5						
1st Story	682	682	30	30	14.9	14.9
2nd Story	300	300	47	47	4.2	4.2
3rd Story	302	302	63	63	3.2	3.2
Exterior Columns in Compression, m = 1.5						
1st Story	707	707	156	156	3.0	3.0
2nd Story	361	361	143	143	1.7	1.7
3rd Story	386	386	119	119	2.2	2.2
Typical Interior Columns, m = 1.5						
1st Story	1554	1554	222	222	4.7	4.7
2nd Story	700	700	191	191	2.4	2.4
3rd Story	687	687	151	151	3.0	3.0
Typical Beam at End Bay, m = 2.5						
1st Story	452	-302	101	-101	1.8	1.2
2nd Story	437	-286	101	-101	1.7	1.1
3rd Story	411	-288	66	-74	2.5	1.6
Typical Beam at Interior Bay, m = 2.5						
1st Story	452	-300	107	-100	1.7	1.2
2nd Story	438	-286	107	-100	1.6	1.1
3rd Story	412	-286	74	-74	2.2	1.5

Notes:
1. Expected strength, Q_{CE} = Nominal Strength x 1.25
2. An acceptance value greater than 1.0 implies non-compliance for the component action.

All of the elements lack the required strength.

(2) Force-controlled actions. The force-controlled actions include beam, column and joint shear and axial loads on the columns. Acceptance of the force-controlled components is based on:

$Q_{CN} \geq Q_{UF}$, where: (FEMA 310 Eq. 4-13)

$Q_{CN} = Q_N$ = Nominal strength of the component at the deformation level under consideration.

Q_{UF} = Action due to gravity and earthquake loading calculated in accordance with FEMA 310 Section 4.2.4.3.2.

Element	Q_{UF}		Q_{CN}		Q_{UF} / Q_{CN}	
	Axial Load Demand (kips)	Shear Demand (kips)	Nominal Axial Load Capacity (kips)	Nominal Shear Capacity (kips)	Acceptance for Axial Load[1]	Acceptance for Shear Load[1]
Exterior Columns in Tension						
1st Story	-3	29	-106	12	0.03	2.50
2nd Story	-3	22	-106	12	0.03	1.90
3rd Story	-3	10	-106	12	0.03	0.86
Exterior Columns in Compression						
1st Story	112	37	520	38	0.22	0.97
2nd Story	72	35	520	36	0.14	0.97
3rd Story	33	25	520	34	0.06	0.74
Typical Interior Columns						
1st Story	135	71	660	50	0.20	1.42
2nd Story	87	58	660	48	0.13	1.21
3rd Story	40	30	660	46	0.06	0.65
Typical Beam at End Bay						
1st Story	---	40	---	10	---	4.08
2nd Story	---	40	---	10	---	4.08
3rd Story	---	35	---	12	---	3.02
Typical Beam at Interior Bay						
1st Story	---	40	---	10	---	4.08
2nd Story	---	40	---	10	---	4.08
3rd Story	---	35	---	12	---	3.02

1 kip = 4.448 kN

Notes:
1. An acceptance value greater than 1.0 implies non-compliance for the component action.

From the above table it is seen that all the columns have sufficient axial capacity for the imposed seismic loading. The columns and beams lack sufficient shear capacity in various areas throughout the frames. This may lead to non-ductile shear failure of some elements.

Joint reinforcing (4.4.1.4.13): The joint shear demands and capacities were calculated previously to determine if the joint is able to develop the adjoining members forces.

Joint	Joint Shear Demand (kips)	Joint Shear Capacity (kips)
Typical Exterior Joint at Roof Level	60	47
Typical Interior Joint at Roof Level	104	156
Typical Exterior Joint at 3rd Floor Level	96	71
Typical Interior Joint at 3rd Floor Level	150	156

1 kip = 4.448 kN

It is seen from the Table that the beam-column joints at the exterior of the roof and 3rd floor levels lack the required shear strength.

5. *Evaluation results.* It is clear from observation of the results that the structure lacks the required strength and ductility imposed on the building from the design earthquake. The building needs major work to add strength, stiffness and ductility if it is going to be continued to be used as living quarters. Therefore, it is recommended that this structure "Definitely needs rehabilitation."

G. Structural Evaluation (Tier 3) (from Table 5-2)

A Tier 3 is not completed as it would only show that the building is deficient as was shown in the Tier 2 evaluation.

H. Nonstructural Evaluation (Tier 2) (from Table 5-3)

Nonstructural assessment is not in the scope of this example.

I. Final Assessment (from Table 6-1)

1. *Structural evaluation assessment*

- *Quantitative:* Deficiencies in the structural components have been identified and quantified (see the evaluation results completed for Step F above (Structural Evaluation Tier 2).

- *Qualitative:* The building is a serious life safety hazard and rehabilitation is feasible. The structure contains adequate load paths, however, the structural systems require strengthening.

2. *Structural rehabilitation strategy:*

The building lacks the required strength and ductile detailing to resist the calculated seismic demands. The column footings have a small footprint (3'-6" x 4'-6") and are also likely to cause overstress in the soil when subjected to the imposed lateral forces. Strengthening the existing footings, columns, and beams is an obvious alternative; but experience has indicated that this approach is costly and disruptive. Additionally, this type of strengthening generally makes the building stiffer and results in increased seismic demand on the existing frames.

The addition of shear walls is a better alternative as they have both high strength to resist the large lateral demands and significant stiffness to reduce drift. Shear walls may either be placed at the building interior or around the perimeter.

At this point a relative cost analysis would be completed to determine which rehabilitation strategy would be most cost efficient.

The tentative rehabilitation concept is to place shear walls around the building perimeter as it is less intrusive than placing new walls at the building interior. Perimeter walls will also provide better torsional resistance.

The intent of the rehabilitation concept is to maintain the present appearance of the exterior walls with a cast-in-place infill. New concrete shear walls could be added adjacent to both sides of the columns or in between the window openings. The space between the window openings is 88" long and the total length available for panels adjacent to the columns is only 48". Using walls between the windows requires less flexural and shear steel due to the larger moment arm and cross-sectional area.

New shear wall panels will be added at each bay on both sides of the building. This will reduce the force concentrations on the foundations below the new wall segments. The walls will extend for the full height of the building. The partial CMU infill panels must be removed in order to accommodate the walls.

3. *Structural rehabilitation concept*

The purpose of the concept is to define the nature and extent of the rehabilitation in sufficient detail to allow the preparation of a preliminary cost estimate. The rehabilitation strategy chosen for this building is the addition of 12 perimeter shear walls at the existing stucco panel locations.

As a first approximation for the steel required, assume that each of the 12 new shear wall segments will resist 1/12 of the forces from the Tier 2 analysis (neglecting the added weight of the walls). The demands on each wall are:
V_r = 1/12(865 kips) = 72 kips (320 kN)
V_{3rd} = 1/12(732 kips) = 61 kips (271 kN)
V_{2nd} = 1/12(366 kips) = 31 kips (138 kN)
V_{total} = 72 k + 61 k + 31 k = 164 kips (729 kN)

M_{base} = (30')(72) + (20')(61 k) + (10')(31 k) = 3690 kip-ft (5004 kN-m)

Assuming an m-factor of 2.5 (from TI 809-04 Table 7-2 with low axial loads and no confined boundary);
M_{trial} = 1/2.5(3690 kip-ft) = 1476 kip-ft (2001 kN-m)
Assume f_y = 1.25 x 60 ksi = 75 ksi and a 70" lever arm, the flexural steel requirements:
= (1476 kip-ft) / (75 ksi)(70" arm) = 3.4 in.^{2} (21.9 mm^2) (approximately 6-#7 bars at each wall end).

It will likely take two curtains of steel to fit all of the longitudinal steel into the wall. Try 10" (254 mm) thick walls to match the beam width of the first two floors.

Holes will need to be drilled through the beams to allow for the longitudinal wall steel to be continuous throughout the wall height.

The existing wall strip footings have minimal steel and most likely will lack the required flexural and shear capacities to resist the anticipated demands imposed by the new shear walls. Therefore, at the ground level all of the CMU infill will be removed and will be replaced with reinforced concrete. This will reduce the flexural demands at the base of the walls as they will be four feet shorter due to the footing height extension.

At this point a programming level estimate of material quantities associated with the selected structural rehabilitation concept would be developed.

4. *Nonstructural evaluation assessment:*

Nonstructural assessment is not in the scope of this example.

5. *Nonstructural rehabilitation strategy:*

Nonstructural assessment is not in the scope of this example.

6. *Nonstructural rehabilitation concept:*

Nonstructural assessment is not in the scope of this example.

At this point a cost estimating specialist will develop the programming level cost estimate for the project. This estimate will include the structural seismic rehabilitation costs, based on the material quantities developed by the structural evaluator, along with the costs for nonstructural seismic rehabilitation and all other items associated with the building upgrade.

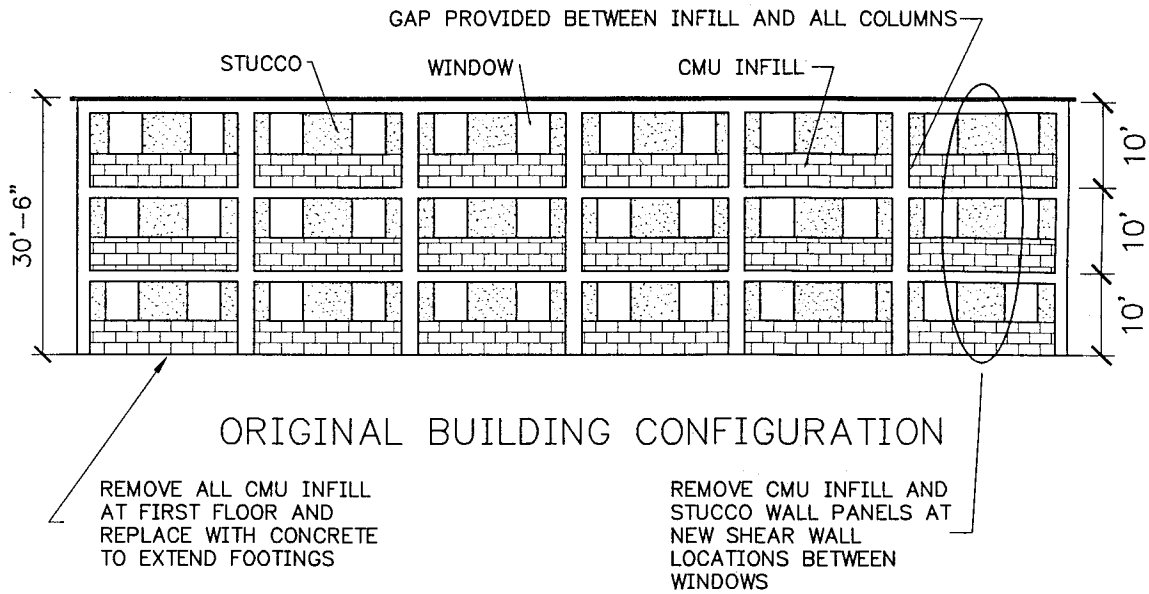

ORIGINAL BUILDING CONFIGURATION

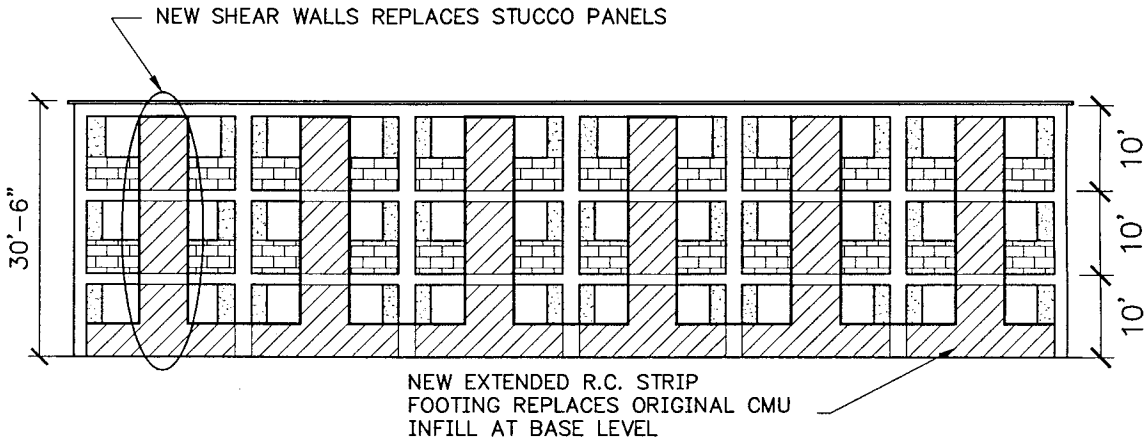

BUILDING REHABILITATION CONCEPT

J. Evaluation Report (from Table 6-2)

At this point, an evaluation report would be compiled to summarize the results of the evaluation of structural systems and nonstructural components. An evaluation report is not shown for this design example; however, the items to be included in the report are:

1. *Executive summary*

2. *Descriptive narrative*

   - Building and site data
   - Geologic hazards
   - Structural evaluations
   - Nonstructural evaluations

3. *Appendices*

   - Prior evaluations
   - Available drawings and other construction documents
   - Geotechnical report
   - Structural evaluation data
   - Nonstructural evaluation data

The Evaluation Process is complete.

Seismic Rehabilitation Design (Chapter 7)

Since rehabilitation of the structural system was the seismic hazard mitigation method selected , the following procedures are completed.

K. Rehabilitation (from Table 7-1)

1. Review Evaluation Report and other available data:

The evaluation report completed earlier was reviewed along with the available drawings.

2. Site Visit

The site was visited during the building evaluation. No further meaningful information could be gathered by another visit.

3. Supplementary analysis of existing building (if necessary)

Supplementary analysis of the existing building is not necessary. The evaluation report contains sufficient detail to commence with the rehabilitation design.

4. Rehabilitation concept selection

5. & 6. *Rehabilitation design and confirming evaluation:* These two steps are combined since the design and confirmation is an iterative process. The structure is analyzed with the Linear Static Procedure in accordance with Section 3.3.1 of FEMA 273. Limitations on the use of the procedure are addressed by paragraph 5-2b of TI 809-04 and Section 2.9 of FEMA 273. The design of the new shear walls is based on a new pseudo lateral force per FEMA 273 and detailed in accordance with FEMA 302. Following the design of the new shear walls, the capacities of the existing concrete frame elements are checked to make sure they can resist the new loads. Finally, the capacities of the foundation and soil are checked to ensure that they can resist forces equal to the development of the superstructure element capacities.

Analysis of Structure using the Linear Static Procedure (LSP) (per Section 3.3.1 of FEMA 273)

In the LSP, the building is modeled with linearly-elastic stiffness and equivalent viscous damping that approximate values expected for loading to near the yield point. For this structure 5% viscous damping is assumed. Design earthquake demands for the LSP are represented by static lateral forces whose sum is equal to the pseudo lateral force defined by FEMA 273 Equation 3-6.

- *Determine pseudo lateral load (per FEM 273 Section 3.3.1.3)*

$$V = C_1C_2C_3S_aW \qquad \text{(FEMA 273 Eq. 3-6)}$$

Determination of C_1 factor:

$C_1 = 1.5$ for $T < 0.10$ seconds
$C_1 = 1.0$ for $T \geq T_0$ seconds

The building period, T, and the period associated with the transition from the constant acceleration segment of the spectrum to the constant velocity segment of the spectrum, T_0, are needed to calculate C_1 (see FEMA 273 Section 2.6.1.5 for discussion of T_0).

Building Period (per FEMA 273 Section 3.3.1.2): The building period is determined using Method 2;

$$T = C_t h_n^{3/4} \qquad \text{(FEMA 273 Eq. 3-4)}$$

Longitudinal Direction: ($C_t = 0.02$ for concrete shear walls, $h_n = 30.6'$)

$T = (0.02)(30.6')^{3/4} = 0.26$ seconds

Determination of T_0 (per FEMA 273 Section 2.6.1.5)

$$T_0 = (S_{X1}B_S) / (S_{XS}B_1) \qquad \text{(FEMA 273 Eq. 2-10)}$$

For determination of T_0, use S_{D1} (= 0.42) and S_{DS} (= 0.82) determined for the building evaluation for S_{X1} and S_{XS}, respectively.

From FEMA 273 Table 2-15, B_S and $B_1 = 1.0$ for 5% damping

$T_0 = (0.42 \times 1.0) / (0.82 \times 1.0) = 0.51$ seconds

Linearly interpolate to obtain $C_1 = 1.5 + \frac{(0.26 - 0.10)}{(0.51 - 0.10)}(1.0 - 1.5) = 1.30$

Determination of C_2 factor:
The C_2 factor is determined from FEMA 273 Table 3-1. The rehabilitation plan calls for the use of non-shear critical shear walls. Therefore, assume framing type 2.

$C_2 = 1.0$ for the Life Safety Performance Level and Framing Type 2.

Determination of C_3 factor:
The C_3 factor is dependent on the stability coefficient, θ, described in FEMA 273 Section 2.11.2. The shear walls are very rigid, and therefore, low drifts are expected. The low drifts will lessen the P-Δ effects so it is assumed that the stability coefficient is less than 0.1. This condition is checked later when constructing the mathematical model of the structure.

$C_3 = 1.0$

Determination of S_a:

S_a is the response spectrum acceleration, at the fundamental period and damping ratio of the building in the direction under consideration. The value of Sa is obtained from the procedure in FEMA 273 Section 2.6.1.5.

T = 0.26 seconds < T_0 = 0.51 seconds, use FEMA 273 Equation 2-8.

For building periods between $0.2T_0 = 0.2(0.51) = 0.10$ and $T_0 = 0.51$, $S_a = S_{XS} / B_S = 0.82/1.0 = 0.82$ (see FEMA 273 Figure 2-1 for a graphical description of the general response spectrum)

$S_a = 0.82$

Determination of Building Weight, W:
The building weight must be updated to reflect the added weight of the new longitudinal shear walls. The new weight is W = 2575 kips (calculations not shown)

V = (1.30)(1.0)(1.0)(0.82) (2575 kips) = 2745 kips (12210 kN)

- *Determine Vertical Distribution of Seismic Forces:*

$F_x = C_{vx}V$ (FEMA 273 Eq. 3-7)

$C_{vx} = \dfrac{w_x h_x^k}{\sum_{i=1}^{n} w_i h_i^k}$, where k = 1.0 for T=0.26 sec < 0.5 seconds (FEMA 273 Eq. 3-8)

Level	w_x (kips)	h_x (ft)	$w_x h_x$ (kipft)	C_{vx}	F_x (kips)	
Roof	712.7	30	21380	0.434	1190	(5293 kN)
3rd Floor	931.1	20	18623	0.378	1037	(4613 kN)
2nd Floor	931.4	10	9314	0.189	518	(2304 kN)

- *Mathematical Modeling Assumptions (per FEMA 273 Section 3.2.2.):*

– The building is modeled assuming rigid diaphragm action. (Equal deflections at top of each column at a particular level)

– Horizontal Torsion (per FEMA 273 Section 3.2.2.2)

The total horizontal torsional effect is made up of the actual and accidental torsion. There is no actual torsion for this structure. Due to symmetry, the centers of mass and eccentricity coincide. The accidental torsion is produced by a horizontal offset in the centers of mass equal to a minimum of 5% of the horizontal dimension at the given floor level measured perpendicular to the direction of the applied load. The effect of accidental torsion need only be considered if the maximum lateral displacement due to this effect at any point on any floor diaphragm exceeds the average displacement by more than 10%. For this regular, symmetrical structure the accidental torsion does not need to be considered. Therefore, no horizontal torsion, either actual or accidental, needs to be considered in the building model.

- The structure is analyzed using a two-dimensional model with RISA 3D software. The new shear walls are designed assuming that they resist the entire seismic force demand in the longitudinal direction. Therefore, they are evaluated as primary components. The columns and beams are evaluated as secondary components.

- Modulus of Elasticity of Concrete; (use the ACI 318 method for determining E)

  $E = 57000\sqrt{f_c'} = 57000\sqrt{3000} = 3.12 \times 10^3$ ksi (ACI 318 Sec. 8.5.1)

  Concrete strength indicated on drawings, $f_c' = 3000$ psi (20670 kPa)

- Effective Concrete Stiffness Values

  Stiffness of reinforced concrete components depends on material properties (including current condition), component dimensions, reinforcement quantities, boundary conditions, and stress levels. The calculation of a member's effective stiffness directly from principles of basic mechanics is impractical in most cases. FEMA 273 provides guidance for calculation of member stiffness for evaluation of concrete structures in Section 6.4.1.2. Table 6-4 of FEMA 273 provides effective stiffness values for a variety of reinforced concrete components, and is used here for ease of calculations. The walls are assumed to be cracked at the design deformation levels (see FEMA 273 Section 6.8.2.2 for discussion on wall stiffness for analysis.)

Beams:	Flexural Rigidity = $0.5E_cI_g$	Shear Rigidity = $0.4E_cA_w$
Columns in compression:	Flexural Rigidity = $0.7E_cI_g$	Shear Rigidity = $0.4E_cA_w$
Columns in tension:	Flexural Rigidity = $0.5E_cI_g$	Shear Rigidity = $0.4E_cA_w$
Walls (assume cracked)	Flexural Rigidity = $0.5E_cI_g$	Shear Rigidity = $0.4E_cA_w$

- Component Gravity Loads

  The walls are assumed to carry no gravity loads since the gravity loads are already in place and being resisted by the concrete frames when the walls are being constructed.

  $Q_G = 1.2\ Q_D + 0.5\ Q_L + 0.2\ Q_S$ (Eq. 7-1)

  FEMA 273 Section 3.2.8 states that $Q_S = 0.0$ where the design snow load is less than 30 psf. (Note: Eq. 7-1 is different than FEMA 273 Equation 3-2. This document uses the gravity load combination specified in ASCE 7 rather than the FEMA equation.)

  $Q_G = 0.9\ Q_D$ (FEMA 273 Eq. 3-3)

  Q_D = Dead load

  $Q_{D\ roof}$ = 1568 plf (22.9 kN / m)
  $Q_{D\ 3rd}$ = 1997 plf (29.1 kN / m)
  $Q_{D\ 2nd}$ = 1997 plf (29.1 kN /m)

  Q_L = Design live load

  $Q_{L\ roof}$ = 198 plf (2.89 kN / m)
  $Q_{L\ 3rd}$ = 496 plf (7.24 kN / m)
  $Q_{L\ 2nd}$ = 496 plf (7.24 kN / m)

  Q_E = Earthquake load (for each longitudinal line of framing)

  ½ of the forces go to each longitudinal framing line on each side of the building.

  $Q_{E\ roof}$ = ½(1190 kips) = 595 kips (2647 kN)
  $Q_{E\ 3rd\ floor}$ = ½(1037 kips) = 519 kips (2309 kN)
  $Q_{E\ 2nd\ floor}$ = ½(518 kips) = 259 kips (1152 kN)

- P-Δ Effects

Two types of P-Δ effects are considered, static and dynamic.

Static P-Δ effects: For linear procedures, the stability coefficient, θ, should be evaluated for each story in the building using FEMA 273 Eq. 2-14. If the coefficient is less than 0.1 in all the stories, static P-Δ effects will be small and may be ignored.

$$\theta_i = \frac{P_i \delta_i}{V_i h_i} \qquad \text{(FEMA 273 Eq.2-14)}$$

The lateral forces, V_i, are placed on the structure to determine the story lateral drifts, δ_i. The calculation of the gravity loads, Pi, is not shown. The story heights are 10' = 120" for the upper two floors, however, since the footings are to be extended upward 4', the first story height is only 6' = 72". The drifts were determined by placing the lateral loads on computer model described above.

3rd Story: $\theta_3 = \frac{(713k)(0.73")}{(1190k)(120")} = 0.004 < 0.1$

2nd Story: $\theta_2 = \frac{(1644k)(0.57")}{(2227k)(120")} = 0.004 < 0.1$

1st Story: $\theta_1 = \frac{(2575k)(0.132")}{(2745k)(72")} = 0.002 < 0.1$

All of the θ values are less than 0.1, therefore, static P-Δ effects are ignored.

Dynamic P-Δ effects: The dynamic P-Δ effects are indirectly evaluated for the linear procedures by using the coefficient C_3, which has been done in the calculation of the pseudo lateral force.

Check of Deformation-Controlled Components

The deformation-controlled actions for the structure include wall and column flexural demands. The spandrel beams are allowed to hinge at the columns and walls as they are not relied on to act as coupling beams. The beams only need to have the capacity to sustain the imposed shear loads after they form hinges. The check of the shear capacity of the beams is done in the force-controlled component checks.

The acceptance criteria for deformation-controlled components is:

$$mQ_{CE} \geq Q_{UD} \qquad \text{(Eq. 7-2)}$$

where:

$$Q_{UD} = Q_G \pm Q_E \qquad \text{(FEMA 273 Eq. 3-14)}$$

Per paragraph 7-2.e(5)(d)1.i, the m-factors used to account for expected ductility of the action shall be taken from Chapter 7 of TI 809-04. These m-factors are the same as the ones in FEMA 273, except that they have values for the Safe Egress Performance Level not contained in the FEMA 273 tables.

Design of shear wall flexural steel and boundary zone detailing

Paragraph 7.2.e(4) states that the primary references for structural detailing of new construction associated with the rehabilitation of existing buildings are the applicable requirements of FEMA 302 and its incorporated reference documents, which for this example includes ACI 318. The design and detailing of the shear walls follows FEMA 302 requirements since the walls are new structural members. The demands on the shear wall segments are determined from the FEMA 273 forces. FEMA 273 Section 6.8 gives guidance on the modeling and acceptance criteria of concrete shear walls.

The beams are assumed to develop hinges at the walls and columns due to the strong column/weak beam condition. The walls are assumed to carry no gravity loads since the gravity loads are already in place and being resisted by the concrete frames when the walls are being constructed.

Shear wall forces assuming the walls resist the entire lateral force demand: (The shear forces are equal to the story forces on each framing line divided by the number of shear walls per framing line.)

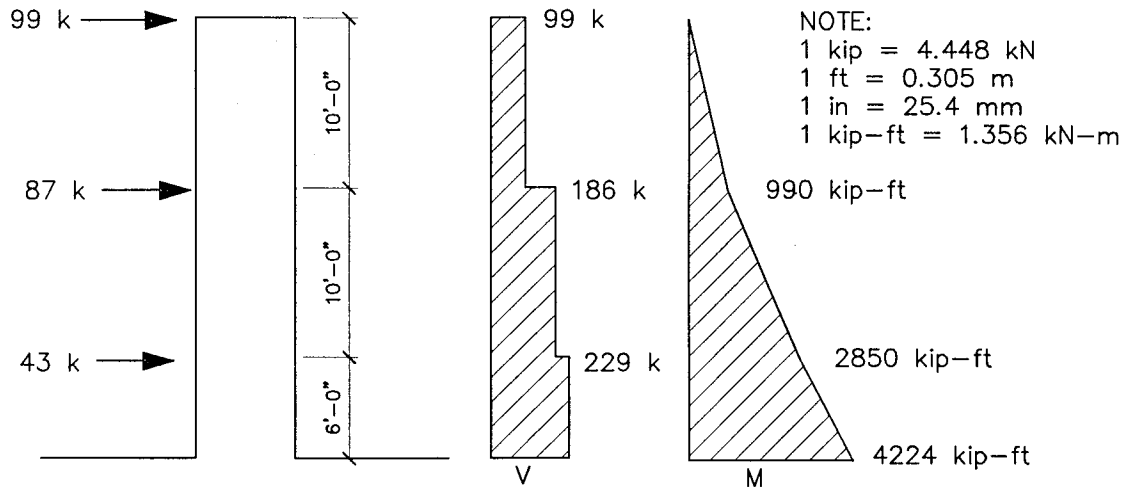

SHEAR WALL FORCES

Flexural demands and longitudinal reinforcement requirements:

The flexural design of the walls follows FEMA 273. The demands on the wall are checked by taking the FEMA 273 forces on the wall and dividing them by the appropriate m-factor. This demand is checked against the expected strength assuming the steel strength = $1.25f_y$ (per FEMA 273 Section 6.8.2.3). Therefore, for 60 ksi reinforcing steel, $1.25f_y = 75$ ksi.

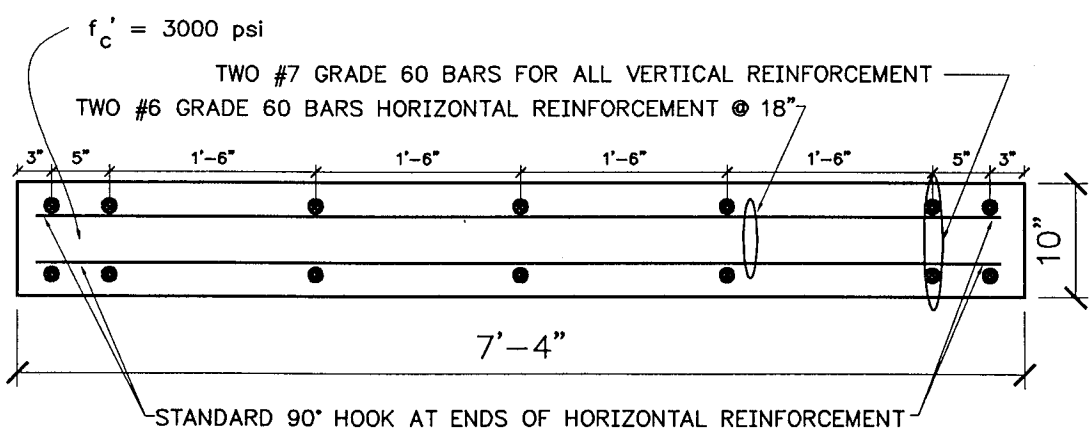

TYPICAL WALL CROSS-SECTION

The moment demand from the analysis is $Q_{UD} = M = 4224$ kip-ft (5728 kN-m)

Assuming the wall reinforcement details will force the wall to act as a flexure-controlled element. The m-factor is determined from TI 809-04 Table 7-2. The walls carry no axial force, have no boundary zones (see section on need for boundary zones below), and their shear ratio is:

$$\frac{\text{Shear}}{t_w l_w \sqrt{f_c'}} = \frac{229000\text{ lbf}}{10''\text{x}88''\sqrt{3000\text{psi}}} = 4.75$$

Interpolate in the table for the Life Safety performance level to obtain m = 2.21

$Q_{UD} = 4224$ kip-ft (5728 kN-m) = moment demand on wall from elastic analysis.

The flexural strength of the wall is determined using the program BIAX. Design assumptions are that the ultimate concrete strain capacity = 0.003 and $f'_c = 3000$ psi (20.7 MPa). The expected strength of the wall is determined assuming a reinforcing yield strength = $1.25f_y = 1.25(60\text{ ksi}) = 75$ ksi (517 MPa)

Wall capacity from BIAX = $Q_{CE} = 1956$ kip-ft (2652 kN-m)

$mQ_{CE} = (2.21)(1956\text{ kip-ft}) = 4323$ kip-ft (5862 kN-m) > $Q_{UD} = 4224$ kip-ft (5728 kN-m), OK

– Determine need for boundary zones (per FEMA 302 Sec. 9.1.1.13)

The FEMA 302 design requirements assume that the lateral forces are computed from the equation
$V = C_s W$, (FEMA 302 Eq. 5.3.2)
where $C_s = S_{DS}/R$ (TI 809-04 Eq. 3-7)
R = 6 for building frame systems with special reinforced concrete shear walls (TI 809-04 Table 7-1)

The forces shown above were determined from $V=C_1C_2C_3S_aW$ with $S_a = S_{DS} = 0.82$.
Therefore, to check the FEMA 302 requirements for boundary zone details, the forces above must be modified.
Modification factor, $\alpha = 1 / C_1C_2C_3R = 1 / (1.3)(1.0)(1.0)(1.0)(6.0) = 0.13$
Therefore, the demands on the walls will be multiplied by 0.13 to determine boundary zone requirements.

$P_u = 1.2D + 0.5L + E$ (per FEMA 302 Sec. 9.1.1.2)
The only gravity loads carried by the walls are their self-weight. The walls are assumed to act as cantilevers with no coupling action by the beams. Therefore, the E term equals zero.

1st story: $P_u = 1.2(26')(10/12)(88/12)(0.150\text{ kcf}) = 29$ kips
2nd story: $P_u = 1.2(20')(10/12)(88/12)(0.150\text{ kcf}) = 22$ kips
3rd story: $P_u = 1.2(10')(10/12)(88/12)(0.150\text{ kcf}) = 11$ kips

1.) $P_u \le 0.10A_g f_c'$ check

0.10(88")(10")(3ksi) = 264k > 29k, OK for all segments

2.) $M_u / V_u l_w$ <1.0 or 3.0 check (α cancels out here)

1st: (4224 kip-ft) / (229 k x 7.33') = 2.5 < 3.0 but > 1.0, check if it passes the shear check

$3A_{cv}\sqrt{f_c'} = 3(880\text{in.}^2)\sqrt{3000\text{psi}} = 145\text{k}$

Shear = α(229 k) = (0.13)(229 k) = 30 k < 145 k, no boundary zones required

2nd: (2850 kip-ft) / (186 k x 7.33') = 2.1 < 3.0 but > 1.0, check shear
Shear = α(186 k) = 24.2 k < 145 k, no boundary zones required

3rd: (990 kip-ft) / (99 k x 7.33') = 1.4 < 3.0 but > 1.0, check shear
Shear = α(99 k) = 12.9 k < 145 k, no boundary zones required

Check the minimum vertical reinforcement requirement (per ACI 318 Sec. 21.6.2.1):
ρ_{vmin} = 0.0025 along the longitudinal and transverse axes

In each wall there is a total of 14- #7 bars, A_{st} = 8.4 in.^{2}

ρ = (8.4 in.^{2}) / (10" x 88") = 0.0095 > 0.0025, OK

Design lap splices for longitudinal reinforcement:
FEMA 273 Section 6.8.2.3 states that splice lengths for primary longitudinal reinforcement shall be evaluated using the procedures given in FEMA 273 Section 6.4.5. FEMA 273 Section 6.4.5 states that the development strength of straight bars and lap splices shall be calculated according to the general provisions of ACI 318-95, with the following exceptions: within yielding regions of components with moderate or high ductility demands, details and strength provisions for new straight developed bars and lap spiced bars shall be according to Chapter 21 of ACI 318-95; within yielding regions of components with low ductility demands, and outside yielding regions, details and strength provisions for new construction shall be according to Chapter 12 of ACI318-95, except requirements and strength provisions for lap splices may be taken as equal to those for straight development of bars in tension without consideration of lap splice classifications.

The shear walls are expected to yield at the base since their design strength is less than the design seismic forces. The ductility demand of the wall must be calculated to determine the lap splice requirements. The DCR for the walls is equal to 4224 kip-ft / 1956 kip-ft = 2.2. For a DCR = 2.2, FEMA 273 Table 6-5 classifies the wall components as having a moderate ductility demand. Therefore lap splices at the base of the wall between the longitudinal steel in the wall and the dowels into the foundation are designed per Chapter 21 of ACI 318-95. Lap splices at intermediate locations along the height of the wall are designed according to Chapter 12 of ACI 318-95 since these intermediate splices are at locations of low ductility demands.

Development length of longitudinal reinforcing steel at the base of the wall per ACI 318 Chapter 21;

ACI 318 Section 21.6.2.4 states that all continuous reinforcement in structural walls shall be anchored or spliced in accordance with the provisions for reinforcement in tension as specified in ACI 318 Section 21.5.4. ACI 318 Section 21.5.4.2 states that the development length of straight bars shall be 2.5 or 3.5 times the development length required for a standard 90 degree hook as specified in ACI 318 Section 21.5.4.1. Per ACI 318 Section 21.5.4.1, the development length l_{dh} for a bar with a standard 90 degree hook in normal weight aggregate concrete shall not be less than 8db, 6 in. and the length required by;

$$l_{dh} = f_y d_b / \left(65\sqrt{f_c'}\right) \qquad \text{(ACI 318 Eq. 21-5)}$$

For #7 bars $l_{dh} = (60000)(7/8) / \left(65\sqrt{3000}\right) = 14.7" > 8"$ and $> 8d_b = 7"$, use $l_{dh} = 15"$

The development length of straight bars is equal to 3.5 times l_{dh} (assuming that the depth of the concrete cast in one lift beneath the bar exceeds 12 in. to be conservative).

$l_d = 3.5\ l_{dh} = 3.5(15") = 52.5"$, use 53" (135 cm) lap splice length for longitudinal bar to dowel laps at base of wall.

Lap splices of longitudinal steel at intermediate heights of wall;

These lap splices are designed per ACI 318 Chapter 12;

$$\frac{l_d}{d_b} = \frac{3}{40}\frac{f_y}{\sqrt{f_c'}}\frac{\alpha\beta\gamma\lambda}{\frac{(c+K_{tr})}{d_b}} \qquad \text{(ACI 318 Eq. 12-1)}$$

$$\frac{l_d}{d_b} = \frac{3}{40}\frac{60000}{\sqrt{3000}}\frac{(1.0)(1.0)(1.0)(1.0)}{2.5} = 32.9$$

For #7 bar development length = 32.9 (7/8) = 29"

Lap splice length = l_d = 29" (74 cm) (no increase for lap splice Class)

Check of Column Members

The column members are evaluated as secondary components. The column demands are determined by subjecting the RISA 3D model to the forces determined earlier with the stiffness of the columns included in the model.

The column flexural capacities are determined at the given axial load. When determining the expected flexural strength of the columns, the expected yield strength of the reinforcement is taken as $1.25f_y$ = 1.25(40 ksi) = 50 ksi (per FEMA 273 Section 6.4.2.2). The flexural demands on the columns are determined by assuming that the beam-column and beam-wall joints are continuous. The frame action tends to brace the walls at the upper floors, while the reverse is true at the bottom floors. Also, the flexural capacity of the columns is a function of the axial load, which is lowest at the upper floors. The higher flexural demands, coupled with the lower flexural capacities of the columns at the upper floors make the top stories critical for the check of column acceptance; however, all columns are checked for the structure.

The m-factors for the columns are taken from Table 7-15 of TI 809-04 for secondary components. There are three factors that are needed to determine the m-factor to use for columns controlled by flexure:

1. The axial load ratio $= \frac{P}{A_g f_c'}$; the m-factor is determined by linearly interpolating for axial load ratios between 0.1 and 0.4 . All of the columns in the structure have axial load ratios less than 0.4, with most falling below 0.1. Linear interpolation is used to determine the intermediate values.

2. Stirrup conformance; if the stirrups in areas of possible plastic hinging are spaced at d/3 or less they are in conformance. All of the columns in the structure have stirrup spacing that is greater than d/3, and are therefore Non-Compliant.

3. The shear ratio $= \frac{V}{b_w d\sqrt{f_c'}}$; the m-factor is determined by linearly interpolating for shear ratios between 3 and 6.

Only one column check is shown to illustrate the check of acceptance.

$Q_{UD} = M_u$ from RISA 3D elastic analysis = 210 kip-ft (285 kN-m)
Axial load on column = 28.3 kips (126 kN)
Shear in column = 33.7 kips (150 kN)

– The axial load ratio $= \frac{28.3\,\text{kips}}{(12''\text{x}23.75'')(3\,\text{ksi})} = 0.03 < 0.1$

Stirrups are Non-conforming

The shear ratio = $\frac{33.7\,\text{kips}(1000\,\text{lbf}/\text{kip})}{(12''\text{x}21.5'')\sqrt{3000}} = 2.38 < 3.0$

The m-factor corresponding to this load state = 2.0 for the Life Safety Performance Level.

The flexural capacity of the column was determined by the program BIAX for an axial load = 28.3 kips (126 kN).

Flexural capacity = Q_{CE} = 134 kip-ft (182 kN-m)

mQ_{CE} = (2.0)(134 kft) = 268 kip-ft (363 kN-m) > Q_{UD} = 210 kip-ft (285 kN-m), OK

All of the columns were found to be acceptable.

Check of Force-Controlled Components

The force-controlled actions for the structure include wall, column, beam, and joint shear, and foundation forces.

The acceptance criteria for force-controlled components is:

$$Q_{CN} \geq Q_{UF} \qquad \text{(Eq. 7-3)}$$

where Q_{UF} is determined from capacity limit analysis of the members delivering forces to the element being evaluated or from either FEMA 273 Equation 3-15 or 3-16. Equation 3-16 can always be used. Equation 3-15 may only be used when the forces contributing to Q_{UF} are delivered by yielding components of the seismic framing system.

$$Q_{UF} = Q_G \pm \frac{Q_E}{C_1 C_2 C_3 J} \qquad \text{(FEMA 273 Eq. 3-15)}$$

$$Q_{UF} = Q_G \pm \frac{Q_E}{C_1 C_2 C_3} \qquad \text{(FEMA 273 Eq. 3-16)}$$

Shear forces in new wall segments

For a cantilever shear wall, the design shear force is equal to the magnitude of the lateral force required to develop the nominal flexural strength at the base of the wall assuming the lateral force is distributed uniformly over the height of the wall (per FEMA 273 Sec. 6.8.2.3).

Determine shear reinforcement requirement based on flexural capacity of the wall:

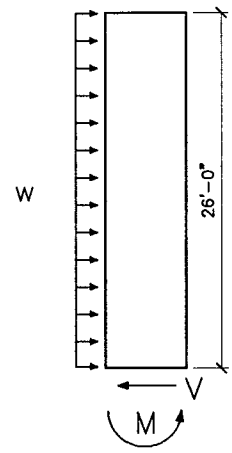

$M = wH^2/2$
$w = 2M / H^2 \quad w = 2(1956 \text{ kft}) / (26')^2 = 5.8 \text{ kips / ft.}$
$V = wH = (5.8 \text{ kips / ft})(26') = 151 \text{ kips}$
$\therefore$ Use $Q_{UF} = V = 151$ kips (672 kN) for design

Determine amount of horizontal shear reinforcement needed to develop V = 151 kips (672 kN);

FEMA 273 Section 6.8.2.3 states that the nominal shear strength of a shear wall is determined based on the principles and equations given in Section 21.6 of ACI 318-95. For all shear strength calculations, 1.0 times the specified reinforcement yield strength should be used.

$V_u = V = 151$ kips

$$V_n = A_{cv}\left(2\sqrt{f_c'} + \rho_n f_y\right) \qquad \text{(ACI 318 Eq. 21-6)}$$

$$\rho_n = \frac{V_n / A_{cv} - 2\sqrt{f_c'}}{f_y}, \text{ set } V_n = V_u = 151 \text{ kips}$$

$$\rho_n = \frac{151000/(10''\text{x}88'') - 2\sqrt{3000}}{60000} = 0.001$$

Minimum reinforcement (per ACI 318 Sec. 21.6.2.1)
$\rho_{vmin} = 0.0025$ along the longitudinal and transverse axes

Try two #6 bars @ 18", $A_{st} = 0.88$ in.^{2}

$\rho = (0.88 \text{ in.}^2) / (10'' \text{ x } 18'') = 0.0049 > 0.0025$, OK

$$Q_{CN} = V_n = (10''\text{x}88'')\left[2\sqrt{3000} + 0.0049(60000)\right] = 355 \text{kips} \ (1579 \text{ kN})$$

Check maximum wall shear strength (per ACI 318 Sec 21.6.5.6)

Individual piers: $V_{max} = 10A_{cv}\sqrt{f_c'} = 10(10"x88")\sqrt{3000} = 482 kips/wall > 355\ k$

Average for wall: $V_{max} = 8A_{cv}\sqrt{f_c'} = 8(10"x88")\sqrt{3000} = 386 kips/wall > 355\ k$

Q_{CN} = 355 k (1579 kN) > Q_{UF} = 151 k (672 kN), OK

Check shear transfer between walls & foundation;
The transfer of shear forces between the walls and the foundation is evaluated using the shear-friction design method of ACI 318 Section 11.7.4

V from capacity analysis of wall = 151 kips = Q_{UF}

$V_n = A_{vf} f_y \mu$ (ACI 318 Eq. 11-25)

$A_{vf} = \frac{V_n}{f_y \mu}$

$\mu = 1.0\lambda, \quad \lambda = 1.0, \quad \mu = 1.0(1.0) = 1.0$ (ACI 318 Sec. 11.7.4.3)

$A_{vf} = V_n / f_y$

A_{vf} = 151 k / 60 ksi

A_{vf} = 2.52 in.^{2} / wall (16.3 cm^2 / wall)

This is much less than the vertical steel already in the wall. Lap dowels at each of the vertical bars.
∴ Steel reinforcement is adequate for design.

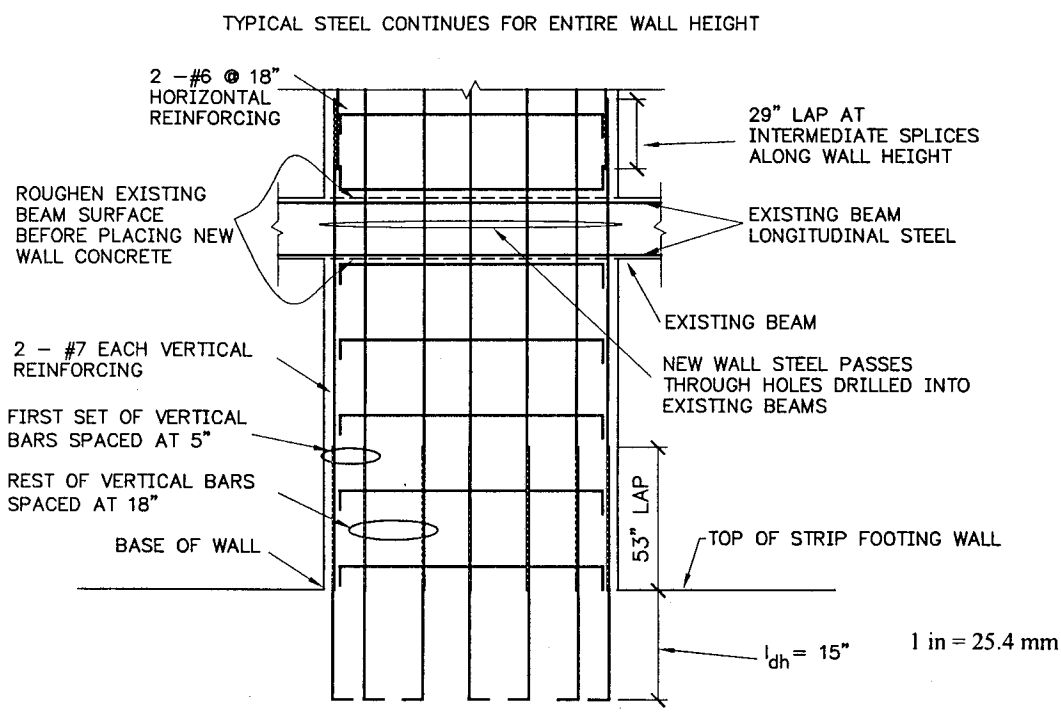

TYPICAL SHEAR WALL ELEVATION

Column Shear

The shear strength of columns is determined using procedures in FEMA 273 Section 6.4.4. To use these procedures, the column demand / capacity ratio must be calculated to classify the member as having high, moderate, or low ductility demand (per FEMA 273 Section 6.4.2.4). For this structure, all of the columns have flexural demand / capacity ratios that are less than 2.0. Therefore, per FEMA 273 Table 6-5, all of the columns are classified as having a low ductility demand.

The shear strength of the columns is calculated as:

$$V_n = V_c + V_s \qquad \text{(ACI 318 Eq. 11-2)}$$

The concrete contribution to the shear strength, V_c, is calculated using the method described in FEMA 273 Section 6.5.2.3.

$$V_c = 3.5\lambda\left(k + \frac{N_u}{2000A_g}\right)\sqrt{f_c'}\,b_w d \qquad \text{(FEMA 273 Eq. 6-3)}$$

where $\lambda = 1.0$ for normal weight concrete, $k = 1.0$ in areas of low ductility demand, and N_u is the axial load determined in accordance with FEMA 273 Section 6.5.2.3.

The shear reinforcement contribution to strength is calculated as:

$$V_s = \frac{A_v f_y d}{s} \qquad \text{(ACI 318 Eq. 11-15)}$$

Check of a typical column (interior perimeter column used for check):

Q_{UF} = V from RISA output using FEMA 273 Equation 3-16 = 26.3 kips (117 kN)

N_u = Axial load from RISA output = 35.4 kips (157 kN)

$$V_c = 3.5(1.0)\left(1.0 + \frac{35400}{2000(12''\text{x}23.75'')}\right)\sqrt{3000}(12'')(21.5'') = 52.5\,\text{kips}\ \ (234\ \text{kN})$$

$$V_s = \frac{(0.22\,\text{in.}^2)(40\,\text{ksi})(21.5'')}{12''} = 15.8\,\text{kips}\,(70.3\ \text{kN})$$

$V_{CN} = V_n$ = 52.5 kips + 15.8 kips = 68.3 kips (304 kN) > Q_{UF} = 26.3 kips (117 kN), OK

All of the columns were found to be acceptable.

Beam Shear

The beams develop flexural hinges at the beam-column and beam-wall interfaces. The shear demand on the beams is calculated per ACI 318 Section 21.3.4. The design shear force V_e is determined from consideration of the statical forces on the portion of the member between faces of the joints. It is assumed that moment of opposite sign corresponding to probable strength M_{pr} act at the joint faces and that the member is loaded with the factored tributary gravity load along its span.

Beam forces;

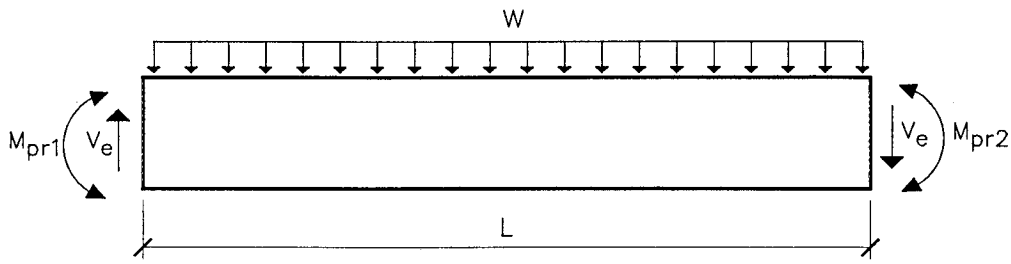

Beam moment capacities (from BIAX): Side 1 is the left end, Side 2 is the right end
M_{pr1}^{+} = 55.2 kip-ft M_{pr1}^{-} = 44.4 kip-ft M_{pr2}^{+} = 55.2 kip-ft M_{pr2}^{-} = 157.0 kip-ft

w = Gravity loads = 1.0(D + L) = 1.0(1997 plf + 496 plf) = 2.5 klf

The beam shears must be evaluated for seismic forces in both directions since the beam flexural strengths are not symmetrical. Only one direction is shown here for illustration.

$V_e = (M_{pr1}^{+} + M_{pr2}^{-}) / L + wL/2$ = (55.2 kip-ft + 157.0 kip-ft) / 5.1' + (2.5 klf)(5.1') / 2 = 48 kips (214 kN)

The beams have high ductility demands at their ends due to the hinging at the walls and columns. FEMA 273 Section 6.4.4 states that within yielding regions of components with moderate or high ductility demand, shear strength shall be calculated according to Chapter 21 of ACI 318-95. ACI 318 Section 21.3.4.2 states that V_c should be taken = 0 in plastic hinge zones. FEMA 273 Section 6.4.4 further states that within yielding regions of components with moderate or high ductility demands, transverse reinforcement shall be assumed ineffective in resisting shear where the longitudinal spacing of transverse reinforcement exceeds half the component effective depth measure in the direction of shear. The transverse ties in the beams are spaced at 12" which is greater than d/2, therefore, the transverse reinforcement is assumed ineffective in resisting shear. With no concrete or transverse reinforcement contributions to the shear strength, FEMA 273 predicts that the beams will have no shear capacity and they must be rehabilitated to resist the design forces.

$V_n = V_c + V_s$ (ACI 318 Eq. 11-2)

$V_n = 0 + 0 = 0$ kips

$V_{UF} = V_e$ = 48 kips (214 kN)

V_n = 0 kips < V_{UF} = 48 kips, No Good.

All of the beams fail this check considering reversal of the seismic forces. The beams must be strengthened to provide greater shear capacities. The shear capacities of the beams may be increased by increasing the beam size and adding additional transverse reinforcement or by adding fiber wrapping. Adding additional transverse reinforcement is very difficult due to the presence of the slab. Therefore, fiber wrapping is chosen. The wrap design is detailed per the manufactures' specs (no capacity calcs shown here).

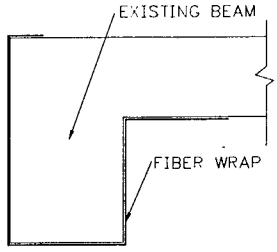

(Note: There are no established military or industry standards for the materials and application techniques used for this upgrade method, so manufacture's information must be relied upon. The manufacturer's claims should be viewed with skepticism and certified conformation of their validity should be required. Also, dealing with one fiber-wrapping manufacturer could constitute proprietary procurement, which is generally not allowed in Government contracts.)

Joint shear

The joint shear was checked in the Tier 2 analysis. The exterior joints were found to be unacceptable, while the interior joints were found to have adequate shear capacity. Therefore, the exterior joints must be strengthened. Like the beams, fiber wrapping is chosen to strengthen the joints. The wrapping is detailed per the manufacture's specs (no capacity calcs shown here). See note above for beam fiber wrapping.

Foundation

Concrete strip footings:

The foundation demands are based on the gravity loads and flexural capacities of the columns and walls. At column locations, the foundation is loaded with a point load equal to the design gravity load, and a moment equal to the flexural capacity of the column at the design gravity load. At wall locations, the foundation is loaded with a force couple equal to the flexural capacity of the wall, with a distance between the forces (lever arm of wall) equal to 6', and an axial load equal to the weight of the wall. The strip footing is modeled as a beam on an elastic medium by supporting the beam with closely spaced compression only springs. The axial loads are from the tributary gravity loads. The moment capacity of the members is determined using the computer program BIAX.

Axial load on exterior columns:	64 kips (285 kN)
Moment capacity of columns @ axial load:	112 kipft (152 kN-m)
Axial load on interior columns:	134 kips (596 kN)
Moment capacity of columns @ axial load:	191 kip-ft (259 kN-m)
Weight of wall: (10"/12)(88"/12)(0.150 kcf)(26'):	24 kips (107 kN)
Moment capacity of wall:	1956 kip-ft (2652 kN-m)
Forces for couple = M / lever arm = 1956 kft / 6'	326 kips (1450 kN)

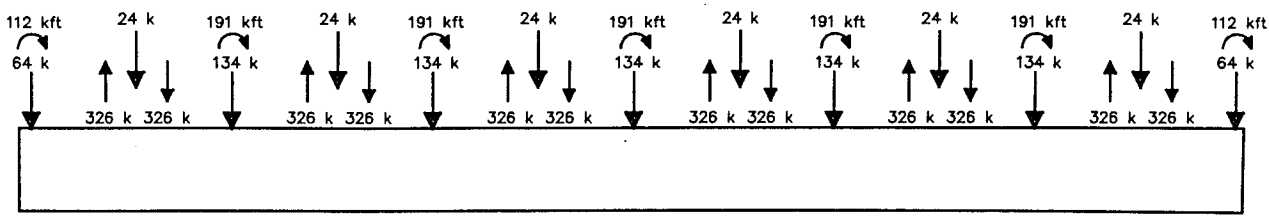

Shear in Footings

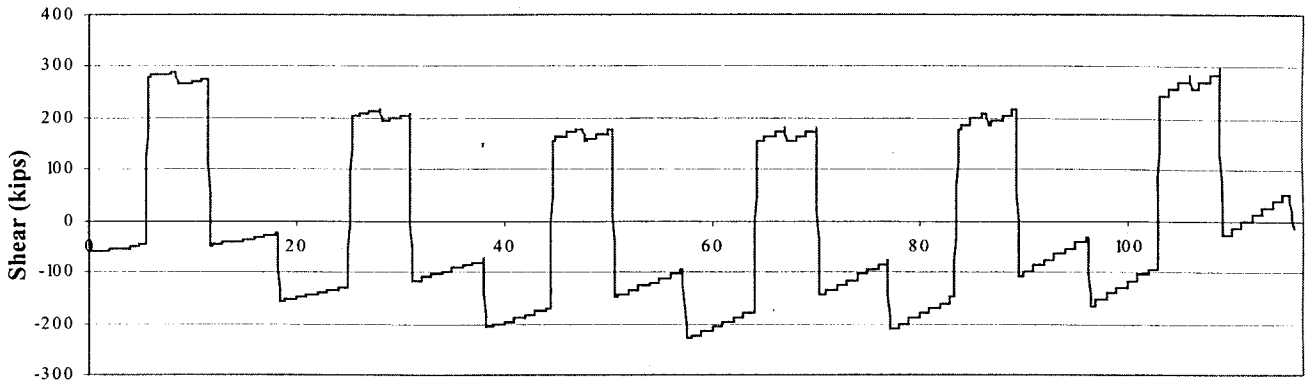

Length Along Wall (ft)

$V_{max} = V_{UF} = 300$ kips (1334 kN)

The shear strength of the new expanded footing is made up of contributions from the concrete and reinforcing steel. The concrete contribution is calculated assuming that both the existing and new concrete portions resist shear. The reinforcing steel contribution is calculated assuming that only the new steel resists shear, neglecting the existing reinforcement.

$V_n = V_c + V_s$

$V_c = 2\sqrt{f_c'}\,b_w d = 2\sqrt{3000}(10")(70") = 77\,\text{kips}$ d = 70" from BIAX output

$$V_s = \frac{A_s f_y d}{s} = \frac{(0.39\text{in.}^2)(60\text{ksi})(48")}{(5")} = 225\,\text{kips}$$

$V_n = V_{CN} = 77$ kips + 225 kips = 302 kips (1343 kN) > $V_{UF} = 300$ kips (1334 kN), OK

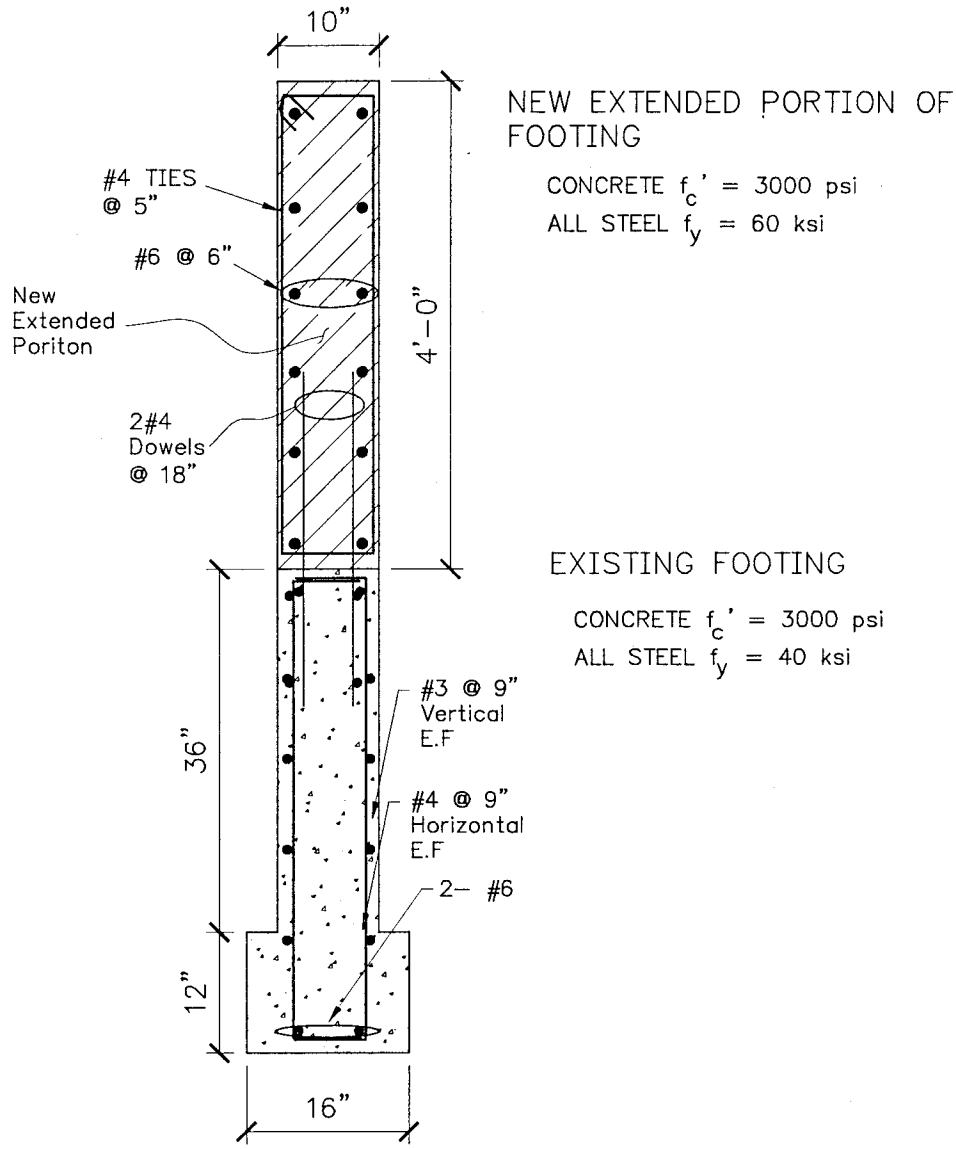

CROSS SECTION OF NEW EXTENDED FOOTING

The shear forces from the columns and walls must be transferred through the strip footing and across the interface between the new and existing concrete. The new extended portion of the wall is doweled into the existing portion with 2#4 bars at every 18". The shear friction capacity is calculated using ACI 318 Section 11.7.4. The shear demand is calculated using the flexural-shear capacities of the walls and columns at the design gravity loads.

Moment capacity of exterior columns @ axial load:	112 kip-ft
Shear at base = 2M / L = 2(112 kft)/6':	37 kips
Moment capacity of interior columns @ axial load:	191 kip-ft
Shear at base = 2M / L = 2(191 kft)/6':	64 kips

Moment capacity of wall: 1956 kip-ft
Shear at base (see shear wall design): 151 kips

V_{UF} = 2(37 kips) + 5(64 kips) + 6(151 kips) = 1300 kips (5782 kN)

Check horizontal shear capacity of strip footing:
Assume the footing acts as a squat wall.

$V_n = A_{cv}\left(\alpha_c\sqrt{f_c'} + \rho_n f_y\right)$, where $\alpha = 3$ for $h/l < 1.5$ (ACI 318 Eq. 21-7)

neglect the steel contribution;

$V_n = V_{CN} = V_n = (10")(117'x12"/')\left(3\sqrt{3000}\right) = 2307$ kips (10262 kN) > V_{UF} = 1300 kips (5782 kN), OK

Check shear friction:

$V_n = A_{vf}f_y\mu$ = (0.39 in.^{2})(60 ksi)(1.0) = 23.4 kips per set of 2 # 4 dowels (ACI 318 Eq. 11-25)
Dowels spaced at 18" 117' / 18" spacing per set = 78 sets of dowels
V_{CN} = 78(23.4 kips) = 1825 kips (8118 kN) > V_{UF} = 1300 kips (5782 kN), OK

Check moment capacity of footings:

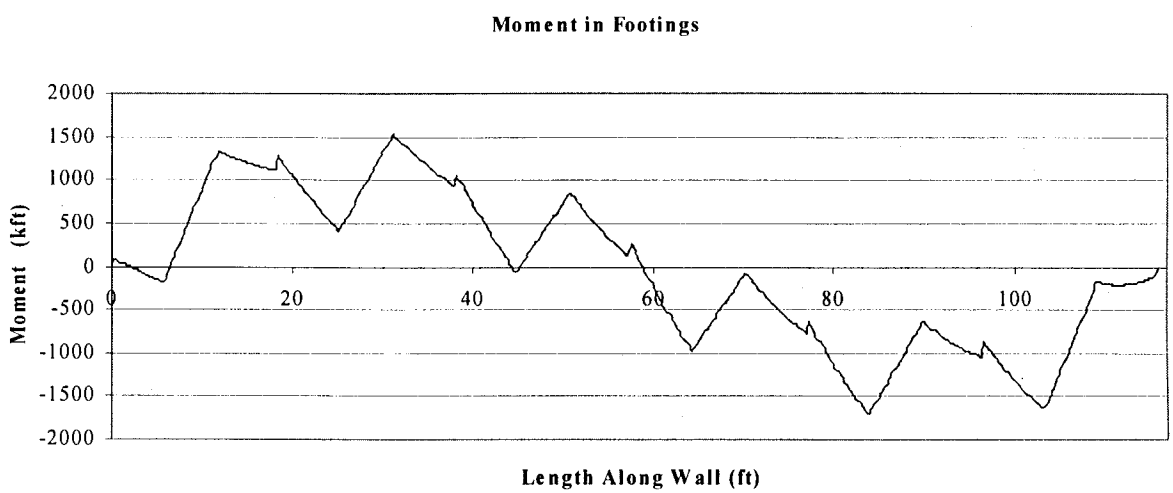

M_{CL}^+ = 1543 kip-ft > M_{UF}^+ = 1510 kip-ft, OK (Capacities from BIAX)
M_{CL}^- = 3400 kip-ft (4610 kN-m) > M_{UF}^- = 1650 kip-ft (2237 kN-m), OK

Check soil capacity:

The allowable stress for the soil indicated on the drawings = 8 ksf. FEMA 273 Section 4.4.1.2 states that the expected strength of the soil for seismic effects using the presumptive method may be taken as two times the allowable stress value. Therefore $q_c = 2q_{all}$ = 2(8 ksf) = 16 ksf. The soil is loaded with the foundation loads shown above as well as the weight of the foundation and a moment created by the shears at the column and wall bases acting over a length equal to the new expanded footing depth (8').

Shear at base = 1300 kips (5782 kN)

Moment due to shear = V(depth of footing) = 1300 kips(8') =	10400 kip-ft (14102 kN-m)
Weight of foundation: [(16"/12)(1')+(12"/12)(7')](0.150 kcf) =	1.25 klf (18.2 kN/m)
Total weight of foundation = 1.25 klf(117') =	146 kips (649 kN)

Calculate soil stress distribution below footing:

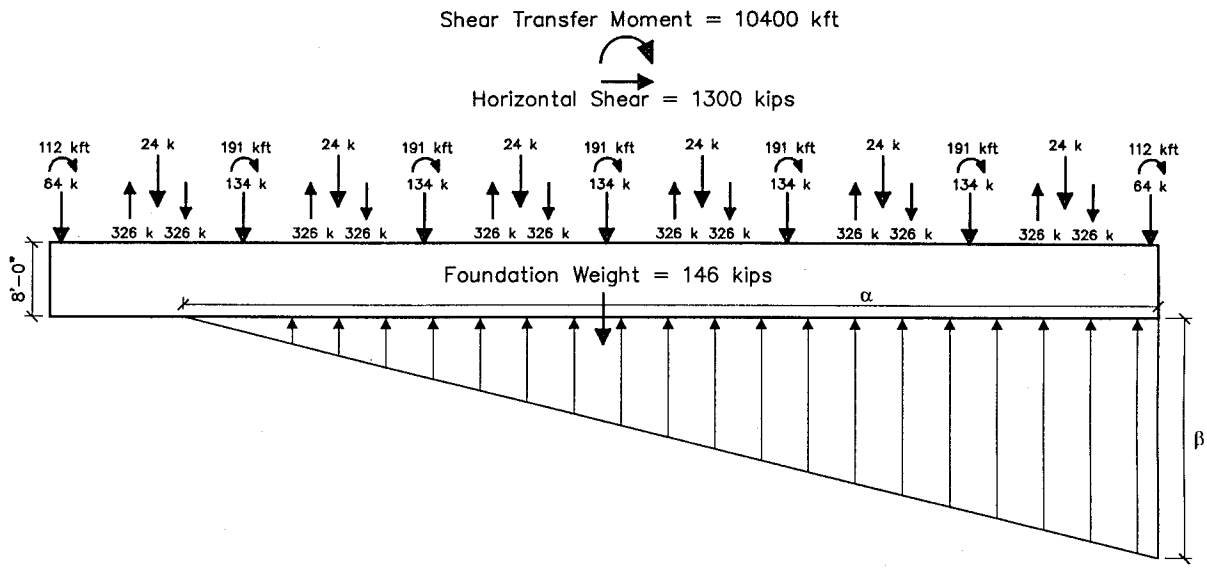

Total moment about right end of footing due to superstructure forces, M = 40333 kip-ft (54692 kN-m) ccw
Total axial force due to superstructure and foundation weight, P = 1088 k (4839 kN)

Determine if 16 ksf stress is violated by assuming linear soil force distribution:
$P = 1/2\alpha\beta$
$M = 1/2\alpha\beta(1/3\alpha) = 1/6\alpha^2\beta$

Solving for α and β,
$\alpha = 111.2' < 117'$
$\beta = 19.6$ klf

Footing is 16" wide at base,
$\sigma_{soil} = \beta/w = 19.6 \text{ klf} / (16''/12) = 14.7 \text{ ksf} < 16 \text{ ksf}$, OK

Shear strength of transverse walls

The shear strength of the transverse walls is checked to see if they have enough capacity based on the new base shear. The base shear is higher since the building weight has been increased by the wall additions.

Pseudo lateral force in the transverse direction is equal to that in the longitudinal direction since the weight (W), C-coefficients ($C_1C_2C_3$) and spectral acceleration (S_a) are the same for both directions.

V_{pseudo} = 2745 kips / 2 walls = 1373 kips / wall (6107 kN)
$V_{UF} = V_{pseudo} / C_1C_2C_3$ = 1373 kips / (1.0)(1.0)(1.3) = 1056 kips (4697 kN)

$V_n = A_{cv}\left(\alpha_c\sqrt{f_c'} + \rho_n f_y\right)$, where $\alpha = 3$ h/3 = 30.6' / 39' = 0.8 <1.5 (ACI 318 Eq. 21-7)

The total wall area, A_{cv} = thickness x (wall length); thickness = 8", length = 40'-8", openings = 3'-4"
A_{cv} = (8")(40.67'-3.33')(12"/') = 3585 in.^{2}

$V_n = 3585\text{in.}^2\left(3.0\sqrt{3000} + (0.0026)(40000)\right) = 962\text{ kips (4279 kN)}$

$V_{CN} = 962$ kips (4279 kN) $< V_{UF} = 1056$ kips (4697 kN)

The walls D/C = 1056/962 = 1.1

The walls are shown to be 10% overstressed. However, per paragraph 7-2.f.(5)(d), a 10 to 15 percent reduction in the seismic demand of a deficient component is permitted in the structural evaluation if such reduction can preclude the rehabilitation of an otherwise deficient building. The walls are slightly overstressed, but not enough to warrant additional rehabilitation. Therefore, assume the walls are acceptable.

7. *Prepare construction documents:*

Construction documents are not included for this design example.

8. *Quality assurance / quality control:*

QA / QC is not included for this design example.

D2. Two-story Steel Moment Frame Building

Building & Site Data.

This example will cover the evaluation using the FEMA 310 guidelines and structural rehabilitation design for an Immediate Occupancy performance level building located in a high seismic area at a military installation in California. A Tier 1 (screening) evaluation will be bypassed since the building's performance level cannot be accepted with a Tier 1 evaluation. In the rehabilitation design, a structural analysis is done using a Nonlinear Static Procedure (NSP).

Building Description.

This is a two story ordinary moment frame building located in California built in the early 1960's. It has welded beam/column joints but the strong column/weak beam provision did not apply. The diaphragms are steel decking with concrete fill at the second floor level and bare metal decking at the roof level. The curtain walls are prefinished insulated metal panels. The building measures 75' x 75' (22.9 m x 22.9 m) in plan with three 25' (7.6 m) bays in each direction. The story heights are both 11' (3.36 m) with a 22' (6.71 m) overall height. The building is being converted to Seismic Use Group IIIE occupancy and has an Immediate Occupancy (IO) performance level.

Vertical Load Resisting System. The vertical load resisting system consists of metal decking supported by steel framing. The decking spans over purlins which are supported by wide flange beams. The beams frame into the columns with all connections being fully restrained. The decking is 20 gage bare metal at the roof level and is concrete filled at the second floor level (1-1/2" (38.1 mm) decking with 2-1/2" (63.5 mm) lightweight concrete fill). The columns are spaced at 25' (7.6 m) on center and are supported on spread footings. The spread footings consist of 4' x 6' (1.22 m x 1.83 m) reinforced concrete footings with a 24" x 24" (61 cm x 61 cm) extended pedestal. The perimeter of the building has 12" (305 mm) strip footings built integrally with the column footings.

Lateral Load Resisting System. The primary lateral-force resisting system consists of the second floor and roof decks acting as diaphragms transmitting lateral forces to the steel frames. The lateral-force resisting frame system consists of steel beam-column moment frames with all connections being fully restrained moment connections (full penetration flange welds with a shear tab). The lateral forces resisted by the columns of the frames are transferred into the spread and strip footing foundations which resist shear forces through friction and passive soil pressure.

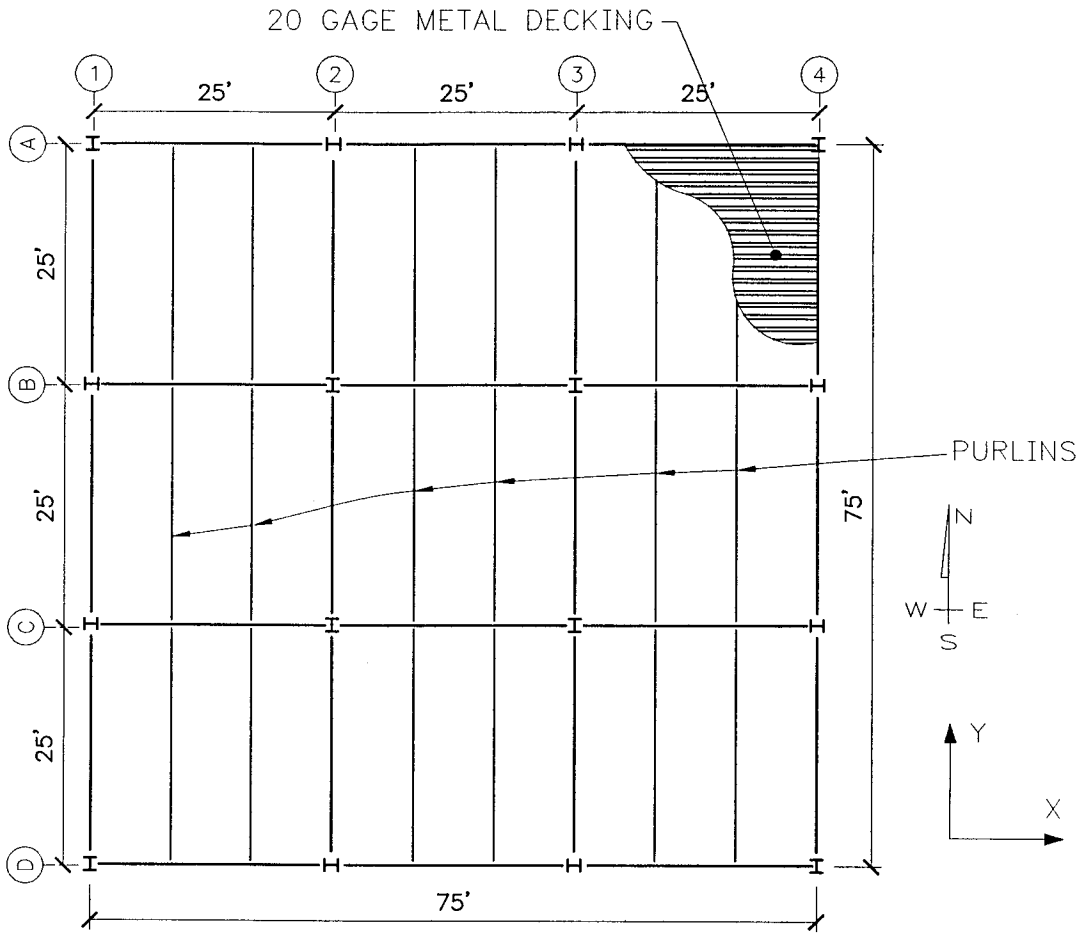

BEAMS ALONG GRIDS 1 & 4:	W 12x19
BEAMS ALONG GRIDS 2 & 3:	W 12x22
GIRDERS ALONG GRIDS A & D:	W 14x22
GIRDERS ALONG GRIDS B & C:	W 14x26
PURLINS:	W 12x16
ALL COLUMNS:	W 10x45

NOTE: ALL BEAM-TO-COLUMN CONNECTIONS ARE FULLY-FIXED MOMENT RESISTING CONNECTIONS

ROOF FRAMING

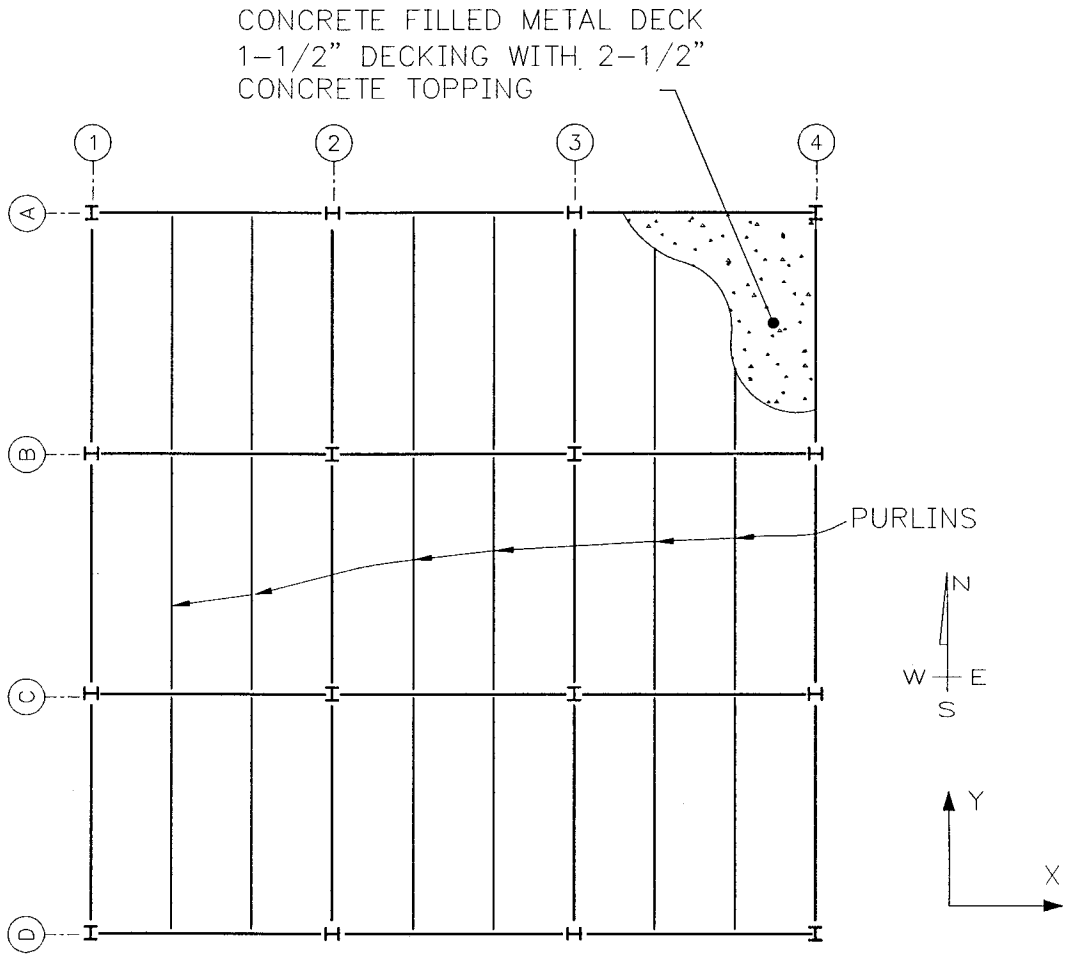

BEAMS ALONG GRIDS 1 & 4:	W 14x22
BEAMS ALONG GRIDS 2 & 3:	W 14x30
GIRDERS ALONG GRIDS A & D:	W 14x38
GIRDERS ALONG GRIDS B & C:	W 16X57
PURLINS:	W 12x26
ALL COLUMNS:	W 10x45

NOTE: ALL BEAM-TO-COLUMN CONNECTIONS ARE FULLY-FIXED MOMENT RESISTING CONNECTIONS

SECOND FLOOR FRAMING

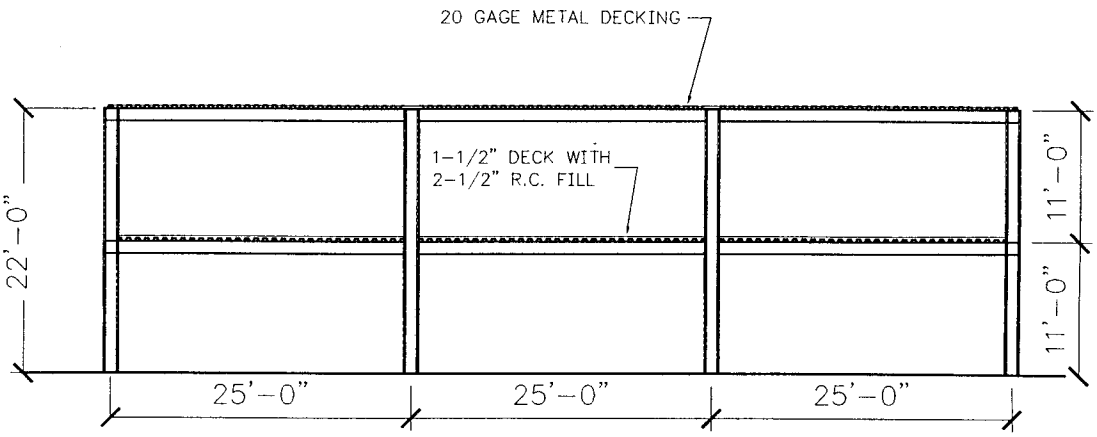

WEST ELEVATION

1 ft = 0.305 m

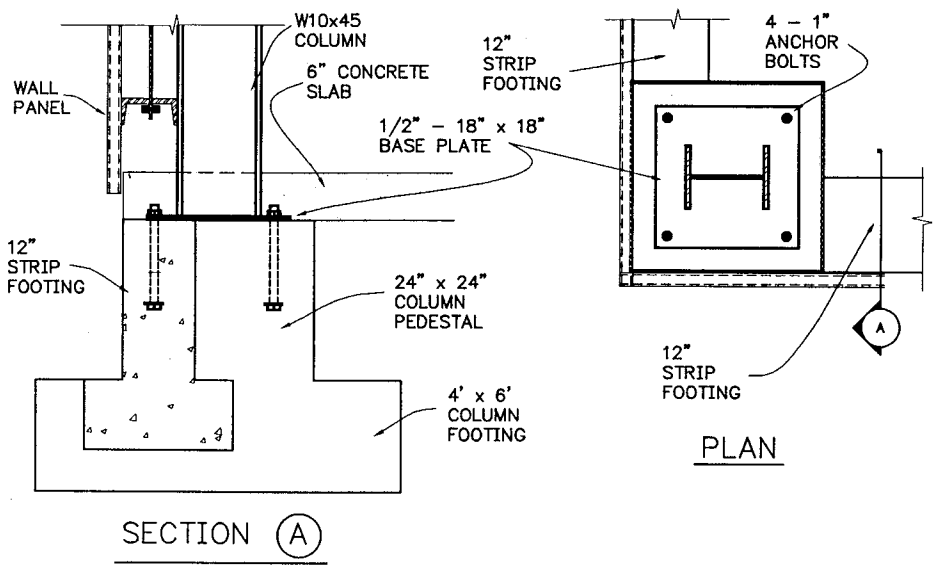

COLUMN FOOTING ELEVATION AND PLAN VIEW

1 ft = 0.305 m
1 in = 25.4 mm

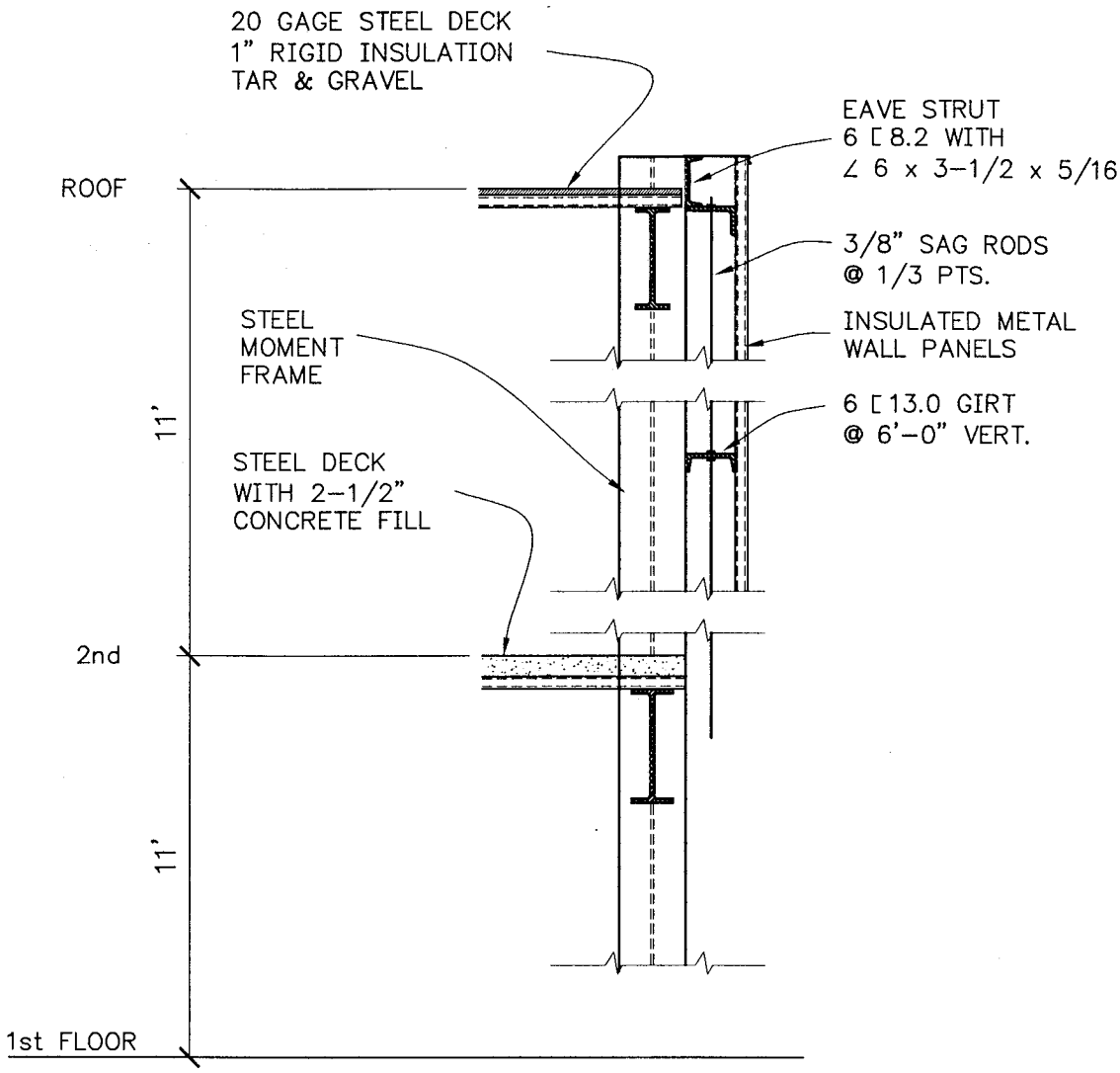

TYPICAL SECTION AT EXTERIOR WALL

A. Preliminary Determinations (from Table 2-1)

1. Obtain building and site data:

a. Seismic Use Group. The building is needed for emergency operations subsequent to a natural disaster, and is therefore classified as an Essential Facility (Seismic Use Group IIIE) in Table 2-2.

b. Structural Performance Level. This structure must remain safe to occupy with all essential functions operational following an earthquake. Therefore, the structure is designed to the Immediate Occupancy structural performance level (from Table 2-3).

c. Applicable Ground Motions (Performance Objectives). Table 2-4 prescribes a ground motion of 2/3 MCE for the Seismic Use Group IIIE, Immediate Occupancy Performance Level. The derivations of the ground motions are described in Chapter 3 of TI 809-04. The spectral accelerations are determined from the MCE maps for the given location.

(1) Determine the short-period and one-second period spectral response accelerations:

$S_S = 1.50$ g	(MCE Map No. 3)
$S_1 = 0.60$ g	(MCE Map No. 4)

(2) Determine the site response coefficients: A geotechnical report of the building site classifies the soil as Class D (See TI 809-04 Table 3-1). The site response coefficients are determined by interpolation of Tables 3-2a and 3-2b of TI 809-04.

$F_a = 1.00$	(TI 809-04 Table 3-2a)
$F_v = 1.50$	(TI 809-04 Table 3-2b)

(3) Determine the adjusted MCE spectral response accelerations:

$S_{MS} = F_aS_S = (1.00)(1.50) = 1.5$	(TI 809-04 Eq. 3-1)
$S_{M1} = F_vS_1 = (1.5)(0.60) = 0.9$	(TI 809-04 Eq. 3-2)

(4) Determine the design spectral response accelerations:

$S_{DS} = 2/3\ S_{MS} = (2/3)(1.5) = 1.0$	(TI 809-04 Eq. 3-3)
$S_{D1} = 2/3\ S_{M1} = (2/3)(0.9) = 0.6$	(TI 809-04 Eq. 3-4)

d. Determine seismic design category:

Seismic design category: D	(Table 3-4a)
Seismic design category: D	(Table 3-4b)

2. Screen for geologic hazards and foundations. Screening for hazards was performed in accordance with Paragraph F-3 of Appendix F in TI 809-04. It was determined that no hazards existed. Table 4-2 of this document requires that the geologic site hazard and foundation checklists contained in FEMA 310 be completed. See step C.2 for the completed checklist.

3. Evaluate geologic hazards. Not necessary.

4. Mitigate geologic hazards. Not Necessary.

B. Preliminary Structural Assessment (from Table 4-1)

At this point, after reviewing the drawings and conducting an on-site visual inspection of the building, a judgmental decision is made as to whether the building definitely requires rehabilitation without further evaluation or whether further evaluation might indicate that the building can be considered to be acceptable without rehabilitation.

1. Determine if building definitely needs rehabilitation without further evaluation. It is not obvious if the building needs rehabilitation or not. There is a continuous load path and no obvious signs of structural distress. The building may have the required strength and stiffness but fails the strong column weak beam condition. Therefore, it is decided that the building be subjected to further evaluation to determine if it can be considered to be acceptable without rehabilitation.

2. Determine evaluation level required. Paragraph 4-2.a requires that a Tier 2 full building evaluation be performed for all buildings in Seismic Use Group IIIE.

C. Structural Screening (Tier 1) (from Table 4-2)

This step is skipped since the building goes straight to a full building Tier 2 evaluation.

D. Preliminary Nonstructural Assessment (from Table 4-4)

Nonstructural assessment is not in the scope of this example.

E. Nonstructural Screening (Tier 1) (from Table 4-5)

Nonstructural assessment is not in the scope of this example.

F. Structural Evaluation (Tier 2) (from Table 5-1)

1. Select appropriate analytical procedure. Per FEMA 310 Section 4.2.2, a linear static analysis of the structure is permitted (Note: The structure does have mass irregularity due to the light roof compared to the concrete filled second floor deck. However, FEMA 310 Section C4.3.2.5 states that light roofs need not be considered.)

2. Determine applicable ground motion. For Seismic Use Group IIIE and the Immediate Occupancy Performance Level the ground motion specified in Table 2-4 is 2/3 MCE.

3. Perform structural analysis. The steps required for the LSP are laid out in Section 4.2.2.1 of FEMA 310.

- *Develop a mathematical model of the building in accordance with Sec. 4.2.3 of FEMA 310.*

The building is analyzed using a three-dimensional model with a flexible roof diaphragm and a rigid second floor diaphragm. Torsional effects resulting from the eccentricity between the centers of mass and rigidity are sufficiently small to be ignored. Therefore, only an accidental torsion of 5% of the horizontal dimension is considered for the second floor rigid diaphragm. The torsional force is applied as a moment on the second floor diaphragm equal to the product of the second story shear forces from the linear analysis and the 5% plan dimension offset.

The primary components modeled for this structure are the roof and second floor diaphragms and the steel moment frames. No secondary components are considered.

The metal deck roof is modeled as a flexible diaphragm. Masses are assigned to the lines of framing based on tributary area. The second floor consists of concrete filled metal deck. It is modeled as a rigid diaphragm. To account for the diaphragm rigidity, the second floor is modeled with the nodes constrained to equal deflections.

The columns are modeled with pinned bases with all of the beam-to-column connections being fully-fixed moment resisting connections (full penetration flange welds with bolted shear tabs.) This means the columns must resist moments and shears in both orthogonal directions. FEMA 310 Sec. 4.2.3.5 requires that components forming part of two or more intersecting elements must be analyzed considering multidirectional excitation effects. Multidirectional effects are evaluated by applying 100% of the seismic forces in one horizontal direction plus 30% of the seismic forces in the perpendicular horizontal direction.

- *Determine the pseudo lateral forces in accordance with FEMA 310 Sec. 4.2.2.1.1:*

The pseudo lateral force applied in the LSP is calculated in accordance with FEMA 310 Section 3.5.2.1. The building is assumed to behave as moment frame structure.

$V = CS_aW$ (FEMA 310 Eq. 3-1)
$C = 1.1$ (FEMA 310 Table 3-4)
$S_a = S_{D1} / T$, but S_a need not exceed S_{DS}; (FEMA 310 Eq. 3-4)
$T = C_t h_n^{3/4} = 0.035(22\text{ ft.})^{3/4} = 0.36$ sec. (FEMA 310 Eq. 3-7)
$S_{DS} = 1.0$, $S_{D1} = 0.6$ (determined previously)
$S_a = 0.6 / 0.36 = 1.67 > 1.0$, use $S_a = 1.0$

Seismic weight of building per FEMA 310 Section 3.5.2.1 (calculations not shown)

Seismic Weight Tributary to Roof Level =	180 kips (801 kN)
Seismic Weight Tributary to 2nd Floor Level =	320 kips (1423 kN)
Total Building Seismic Weight =	500 kips (2224 kN)

V = (1.1)(1.0)(500 kips) = 550 kips (2446 kN)

- *Distribute the lateral forces vertically in accordance with Sec. 4.2.2.1.2 of FEMA 310.*

The pseudo lateral force shall be distributed vertically in accordance with the equations:

$$F_x = C_{vx} V \quad \text{(FEMA 310 Eq. 4-2)}$$

$$C_{vx} = \frac{w_x h_x^k}{\sum_{i=1}^{n} w_i h_i^k} \quad \text{(FEMA 310 Eq. 4-3)}$$

where k = 1.0 for a building period of 0.36 seconds.

	w_x (kips)	h_x (ft.)	$w_x h_x$ (kft)	F_x (kips)	F_x (kN)
Roof	180	22	3952	291	1293
2nd Floor	320	11	3519	259	1151

- *Determine the building and component forces and displacements:*

The structure is analyzed using the computer program RISA 3D. Torsion is considered at the second floor level due to the rigid concrete filled diaphragm. The structure's centers of mass and rigidity coincide; so only the 5% accidental torsion needs to be considered.

T = V* 5%L = V(0.05)(75') = V * 3.75' (for both directions)

Torsion to be applied to second floor diaphragm = V*3.75' = 380k(3.75') = 1425 kip-ft (1932 kN-m)

Component Gravity Loads (per FEMA 310 Section 4.2.4.2)

Gravity loads;

$Q_G = 1.2\ Q_D + 0.5Q_L + 0.2\ Q_S$ (Eq. 7-1)
$Q_G = 0.9\ Q_D$ (FEMA 310 Eq. 4-7)

Q_D = Dead load, Q_L = Live load, Q_S = Snow load = 0 for snow load < 30 psf (calcs not shown)

Roof Beams:

Beams along lines 1 & 4:	Q_D = 126 plf	Q_L = 67 plf
Beams along lines 2 & 3:	Q_D = 142 plf	Q_L = 134 plf
Beams along lines A & D:	Q_D = 268 plf	Q_L = 200 plf
Beams along lines B & C:	Q_D = 425 plf	Q_L = 400 plf

2nd Floor Beams:

Beams along lines 1 & 4:	Q_D = 361 plf	Q_L = 209 plf
Beams along lines 2 & 3:	Q_D = 500 plf	Q_L = 417 plf
Beams along lines A & D:	Q_D = 860 plf	Q_L = 625 plf
Beams along lines B & C:	Q_D = 1500 plf	Q_L = 1250 plf

Note: 1 plf = 14.59 N / m

(Component actions are not shown here due to length of output. See Acceptance Criteria section below for selected component actions.)

- Deformation-Controlled Actions

$$Q_{UD} = Q_G \pm Q_E \qquad \text{(FEMA 310 Eq. 4-8)}$$

Deformation-controlled actions for this structure include moments in beams and columns. The columns must be checked for effects of axial loads and biaxial bending due to moments along both axes

- Force-Controlled Actions

$$Q_{UF} = Q_G \pm \frac{Q_E}{C} \qquad \text{(FEMA 310 Eq. 4-10)}$$

Force-controlled actions for the structure include all connections, shear in beams and columns (not-checked), panel zone strength and foundation strength (foundations not considered in this example). The diaphragm shears are considered force-controlled actions since diaphragm capacity is controlled by the strength of the welds.

The beam-column connections are checked for the shear capacity of the shear tab connection. The

full-penetration welds are assumed to be adequate. The shear demand on the connection is taken as the lower of the values predicted from FEMA 310 Eq. 4-10 or from $2M_P / L + wL/2$, where $w = 1.2D + 0.5L$.

- *Compute diaphragm forces (per FEMA 310 Sec. 4.2.2.1.3)*

$$F_{px} = \frac{1}{C}\sum_{i=x}^{n} F_i \frac{w_{px}}{\sum_{i=1}^{n} w_i}$$ (FEMA 310 ASCE Draft Standard Third Ballot Eq. 4-4)

	w_x (kips)	ΣF_i (kips)	F_{px} (kips)	F_{px} (kN)
Roof	180	291	264	1175
2nd Floor	320	549	320	1423

The roof deck acts as a flexible diaphragm. The diaphragm forces are resisted by the frames based on tributary area.

$w = F_{px}$ / Length = 264 kips / 75' = 3.5 klf
Shear to interior frame line = trib. width x w = (25')(3.5 klf) = 88 kips (391 kN)
Diaphragm shear = 88 kips / diaphragm depth = 88 kips / 75' = 1.17 klf (17.1 kN / m)

The second floor acts as a rigid diaphragm. The diaphragm forces are resisted by the frames based on relative rigidities. The stiffness of the four frame lines are approximately equal. Therefore, it is assumed that each frame line will resist ¼ of diaphragm force.

Shear to each frame line = 320 kips / 4 = 80 kips (356 kN)
Diaphragm shear = 80 kips / 75' = 1.07 klf (15.6 kN / m)

4. *Acceptance Criteria*

a. *Linear Static Procedure*

(1) Deformation-controlled actions

$$mQ_{CE} \geq Q_{UD}$$ (Eq. 5-1)

– Beams;

Check the beams for bending ;

M_{CE} = Expected bending strength of the beam in the direction considered. The expected bending strength considers development of the plastic section and lateral-torsional buckling using an expected strength, $F_{ye} = 1.25\ F_y = 1.25(36\text{ ksi}) = 45$ ksi. (Note: FEMA 310 Section 4.2.4.4 states that the expected strength, Q_{CE}, of a component shall be assumed equal to the nominal strength multiplied by 1.25.)

$m_x = m_y = 3.0$ for immediate occupancy for beams with $\frac{b}{2t_f} < \frac{52}{\sqrt{F_{ye}}}$. This applies to all of the beams except those at the second floor level along gridlines 2 & 3. The m-factor

for these beams is determined by interpolating between 3 and 2 for $\frac{52}{\sqrt{F_{ye}}} < \frac{b}{2t_f} < \frac{95}{\sqrt{F_{ye}}}$;

m = 2.85

Sample check of beam 1A-1B at second floor level;

The governing load combination is $Q_D = 1.2D + 0.5L$ with earthquake loading in the north-south direction.

M_x = 340.2 kip-ft (461 kN-m)

The beam is a W 14 x 22
BF = 4.06, L_p = 4.3', C_b = 1.0, Z_x = 33.2 in.^{3}, Z_y = 4.39 in.^{3}, F_{ye} = 45 ksi, L_b = 12.5'

$M_{\text{plastic x}} = Z_xF_{ye}$ = (33.2 in.3)(45 ksi)/(12"/') = 124.5 kft
$M_{\text{plastic y}} = Z_yF_{ye}$ = (4.39 in.3)(45 ksi)/(12"/') = 16.5 kft

$M_{CEx} = C_b[M_{\text{plastic x}} - BF(L_b - L_p)] < M_{\text{plastic x}}$ (AISC LRFD Part 4)
M_{CEx} = 1.0[124.5 kip-ft – 4.06(12.5' – 4.3')] = 91.2 kip-ft < 124.5 kip-ft, use 91.2 kip-ft

$m_x = m_y$ = 3.0 ($b/2t_f$ = 7.46 < 52 / $(45)^{1/2}$ = 7.75) (FEMA 310 Table 4-3)

mQ_{CE} = (3.0)(91.2 kip-ft) = 274 kip-ft (372 kN-m) < Q_{UD} = 340.2 kip-ft (461 kN-m), NG

The following beams at the second floor level were found to be inadequate:

1A-1B, 1C-1D, 4A-4B, 4C-4D, 2B-2C, and 3B-3C

All of the rest of the beams were found to be acceptable.

- Columns;

Check the columns for biaxial bending and axial load;

For $P / P_{CL} \geq 0.2$;

$$\frac{P}{P_{CL}} + \frac{8}{9}\left[\frac{M_x}{m_xM_{CEx}} + \frac{M_y}{m_yM_{CEy}}\right] \leq 1.0 \qquad \text{(FEMA 273 Eq. 5-10)}$$

For $P / P_{CL} < 0.2$;

$$\frac{P}{2P_{CL}} + \left[\frac{M_x}{m_xM_{CEx}} + \frac{M_y}{m_yM_{CEy}}\right] \leq 1.0 \qquad \text{(FEMA 273 Eq. 5-11)}$$

m = 2.0 or 3.0 (based on axial load) (FEMA 310 Table 4-3)

Axial load on the columns is a force-controlled action. To reflect this axial demand on the column, P, is calculated without the C factor. The P_{CL} term is the lower bound strength of the columns and is calculated considering buckling of the column using the guidelines laid out in AISC LRFD Chapter E and using a strength reduction factor, ϕ = 1.0

The base of column at grid 2C is checked to show acceptance criteria.

W 10 x 45
$A_g = 13.3$ in.^{2}, $F_y = 36$ ksi, $F_{ye} = 45$ ksi, $r_x = 4.32$ in., $r_y = 2.01$ in., $Z_x = 54.9$ in.^{3}, $Z_y = 20.3$ in.^{3}, $K_x = 2.0$, $K_y = 2.0$, L = 11'

The governing load combination is $Q_D = 1.2D + 0.5L$ and seismic loading in the east-west direction with no torsion included.

P = 140 kips (From force-controlled analysis)
$M_x = 195$ kip-ft (264 kN-m), $M_y = 188$ kip-ft (255 kN-m) (From deformation-controlled analysis)

$P_{CL} = P_n = A_g F_{cr}$ (AISC LRFD Eq. E2-1)

$$\lambda_c = \frac{KL}{r_y \pi}\sqrt{\frac{F_y}{E}} = \frac{(2.0)(11')(12''/')}{(2.01'')(\pi)}\sqrt{\frac{(36\text{ksi})}{(29000\text{ksi})}} = 1.47, < 1.5 \quad \text{(AISC LRFD Eq. E2-4)}$$

$$F_{cr} = (0.658)^{\lambda^2} F_y = (0.658)^{1.47^2}(36\text{ksi}) = 15\text{ksi} \quad \text{(AISC LRFD Eq. E2-3)}$$

$P_{CL} = (13.3 \text{ in.}^2)(15 \text{ ksi}) = 200$ kips (890 kN)

$M_{CEx} = Z_x F_{ye} = (54.9 \text{ in.}^3)(45 \text{ ksi})/(12''/') = 206$ kip-ft (279 kN-m)
$M_{CEy} = Z_y F_{ye} = (20.3 \text{ in.}^3)(45 \text{ ksi})/(12''/') = 76$ kip-ft (103 kN-m)

$P_{ye} = A_g F_{ye} = (13.3 \text{ in.}^2)(45 \text{ ksi}) = 599$ kips (2664 kN)
$P / P_{ye} = 140$ kips / 599 kips = 0.23 > 0.2, < 0.5, therefore m = 2.0

$P / P_{CL} = (140 \text{ kips}) / (200 \text{ kips}) = 0.7 > 0.2$, use FEMA 273 Eq. 5-10

$$\frac{P}{P_{CL}} + \frac{8}{9}\left[\frac{M_x}{m_x M_{CEx}} + \frac{M_y}{m_y M_{CEy}}\right] = \frac{140\text{k}}{200\text{k}} + \frac{8}{9}\left[\frac{195\text{kip}-\text{ft}}{(2)(206\text{kip}-\text{ft})} + \frac{188\text{kip}-\text{ft}}{(2)(76\text{kip}-\text{ft})}\right] = 2.22 > 1.0, \text{NG}$$

All of the columns at the first story were found to fail this check.

(2) Force-controlled actions

- Diaphragm shears;

Roof Level;
Maximum diaphragm shear = 1.17 klf (17.1 kN / m)

The allowable shear listed in a manufacture's catalog for this deck gage and welding pattern is 540 plf. This value is multiplied by 1.5 to bring it to ultimate strength (FEMA 273 Sec. 5.8.1.3 states that allowable shear values may be multiplied by 2.0 to bring them to ultimate strength. However, the catalog used already has the 1/3 increase for allowable stress included. Therefore, the allowable stresses are multiplied by (2.0)(3/4) = 1.5).

Diaphragm strength = 840 plf * 1.5 = 1260 plf (11.8 kN / m) > 1.17 klf (17.1 kN / m), OK

Second Floor Level;
Maximum diaphragm shear = 1.07 klf (15.6 kN / m)
Allowable diaphragm shear = 1500 plf (from manufacture's catalog)
Diaphragm strength = 1.5 * 1500 plf = 2250 plf (32.8 kN / m) > 1.07 klf (15.6 kN / m), OK

– Steel Beam-Column Connections

Flange to column welds;
The welded moment connections must be checked to see if they can develop the capacity of the beams. The beam moment strength is taken as Z_xF_{ye}, where $F_{ye} = 1.25f_y = (1.25)(36\text{ ksi}) = 45$ ksi. The weld electrode strength is 70 ksi and the strength of the full penetration weld is taken as A_{flange} x 70 ksi.

Beam Section	Z_x (in.^{3})	$M_{p\ beam}$[1] (kip-in)	Beam Depth (in.)	Flange thickness (in.)	Flange Width (in.)	Lever Arm[2] (in.)	Flange Force[3] (kips)	Area Flange (in.^{2})	Flange Stress[4] (ksi)
W 14 x 38	61.5	2768	14.1	0.515	6.77	13.59	203.7	3.49	58.4
W16 x 57	105	4725	16.43	0.715	7.12	15.72	300.7	5.09	59.1
W 14 x 22	33.2	1494	13.74	0.335	5	13.41	111.5	1.68	66.5
W 14 x 30	47.3	2129	13.84	0.385	6.73	13.46	158.2	2.59	61.1
W 14 x 22	33.2	1494	13.74	0.335	5	13.41	111.5	1.68	66.5
W 14 x 26	40.2	1809	13.91	0.42	5.025	13.49	134.1	2.11	63.5
W 12 x 19	24.7	1112	12.16	0.35	4	11.81	94.1	1.40	67.2
W 12 x 22	29.3	1319	12.31	0.425	4.03	11.89	110.9	1.71	64.8

Notes:
1. $M_{p\ beam} = ZF_{ye}$, where $F_{ye} = 45$ ksi
2. Lever arm = beam depth – flange thickness
3. Flange force = $M_{p\ beam}$ / Lever arm
4. Flange stress = Flange force / Area flange
5. 1 ksi = 6.89 MPa

The flange stresses for all of the beams is less than 70 ksi (electrode strength). Therefore, the welds can develop the capacities of the beams.

Check of shear tab;
The shear connections are checked to see if they have the capacity to develop the shears associated with beam hinging at the column-beam interface.

The beam-column connections along gridlines A and D at the second floor level are checked to illustrate acceptance checks. The beam size is W 14 x 38 and the column size is W 10x 45.

Determine maximum shear demand on shear plate connection;

$V = 2M_p / L' + wL'/2$, where $L' = L - d_c = 25' - (10.1" / 12"/') = 24.2'$
$M_p = Z_xF_{ye} = (61.5\text{ in.}^3)(45\text{ ksi}) = 2768$ kipin = 231 kip-ft
$w = 1.2D + 0.5L = 1.18$ kip / ft.
$V = 2(231\text{ kip-ft}) / 24.2' + (1.18\text{ k/ft})(24.2') / 2 = 33.4$ kips (149 kN)

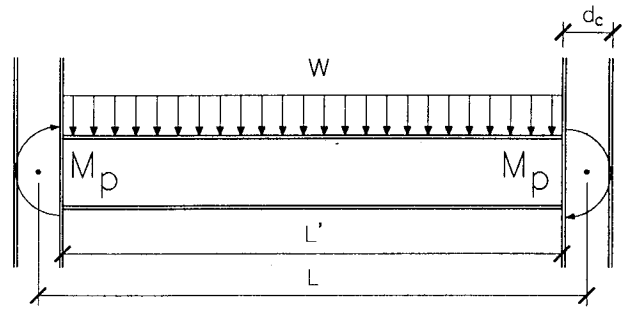

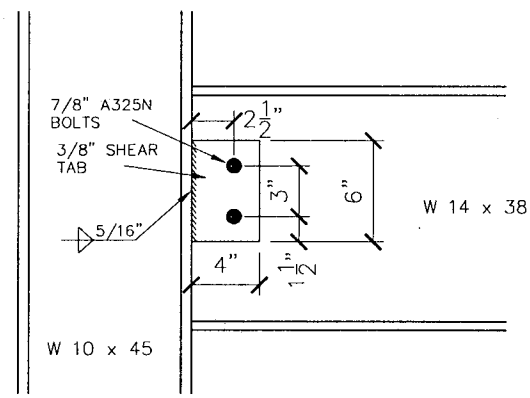

The bolt and plate strengths consider the limit states of bolt shear, bolt bearing on the plate, shear yielding of the plate, shear rupture of the plate, block shear rupture of the plate, and weld shear. Note: The ϕ factor for all strength calculations is 1.0 for lower bound strength.

Bolt shear – (Per AISC LRFD Sec. J3.6)

$r_n = F_v A_b$
$F_v = 48$ ksi (AISC LRFD Table J3.2)
$A_b = 0.60$ in.^{2}
$r_n = (48 \text{ ksi})(0.60 \text{ in.}^2) = 28.8$ kips / bolt

The Single-Plate Connections Section in Part 9 of the AISC LRFD requires that a minimum eccentricity be included for determination of bolt strength. For a rigid support with standard holes; $e_b = |(n-1)-a| = |(2-1)-2.5"| = 1.5"$

Enter Table 8-18 of the AISC LRFD manual to determine the C coefficient. With Angle = 0, e = 1.5", s = 3" and 2 bolts in vertical row, C = 1.18 (Note: the minimum eccentricity tabulated is 2". This value is assumed for the actual eccentricity of 1.5"). A "C" value greater than 1.0 implies that the bolt group is stronger than calculated above. Therefore, assume a value C = 1.0 to be conservative.

$R_n = Cr_n n = (1.0)(28.8 \text{ kips / bolt})(2 \text{ bolts}) = 57.6$ kips (256 kN) > 33.4 kips (149 kN), OK

Bolt bearing strength – (Per AISC LRFD Sec. J3.10)

The bolt bearing strength is calculated based on the thickness of the thinner of the parts joined. The thickness of the beam web is 0.31" which is less than the plate thickness of 0.375". Therefore, use t = 0.31"

$R_n = 2.4dtF_un$ (AISC LRFD Eq. J3-1a)
$R_n = 2.4(7/8")(0.31")(58\ ksi)(2\ bolts) = 75.5\ kips\ (336\ kN) > 33.4\ kips\ (149\ kN)$, OK

Shear yielding of the plate – (Per AISC LRFD Sec. J5.3)

$R_n = 0.6A_gF_y = 0.6(3/8")(6")(36\ ksi) = 49\ kips\ (218\ kN) > 33.4\ kips\ (149\ kN)$, OK (AISC LRFD Eq. J5-3)

Shear rupture of the plate – (Per AISC LRFD Sec. J4.1)

$R_n = 0.6A_{nv}F_u$ (AISC LRFD Eq. J4-2)
$R_n = 0.6(3/8")(6" - 2(7/8" + 1/16"))(58\ ksi) = 53.8\ kips\ (239\ kN) > 33.4\ kips\ (149\ kN)$, OK

Block shear rupture of plate – (Per AISC LRFD Sec. J4.3)

$A_{gv} = (3/8")(4.5") = 1.69\ in.^2$
$A_{nv} = (3/8")(4.5" - 1.5(7/8" + 1/16")) = 1.16\ in.^2$
$A_{nt} = (3/8")((1.5 - ½(7/8" + 1/16")) = 0.39\ in.^2$
$A_{gt} = (3/8")(1.5") = 0.56\ in.^2$

$R_n = [0.6F_yA_{gv} + F_uA_{nt}]$ (AISC LRFD Eq. J4-3a)
$R_n = [0.6(36\ ksi)(1.69\ in.^2) + (58\ ksi)(0.39\ in.^2)] = 59\ kips\ (262\ kN) > 33.4\ kips\ (149\ kN)kips$, OK

$R_n = [0.6F_uA_{nv} + F_yA_{gt}]$ (AISC LRFD Eq. J4-3b)
$R_n = [0.6(58\ ksi)(1.16\ in.^2) + (36\ ksi)(0.56\ in.^2)] = 61\ kips\ (271\ kN) > 33.4\ kips\ (149\ kN)$, OK

Weld shear – (Per AISC LRFD Sec. J2.4)

$R_n = F_wA_w = (0.6 \times 60\ ksi)(0.707 \times 5/16")(2 \times 6") = 95\ kips\ (423\ kN) > 33.4\ kips\ (149\ kN)$, OK

5. *Evaluation results:*

Deficiencies:

The first story columns and several beams were found to be overstressed for flexural forces.

G. Structural Evaluation (Tier 3) (from Table 5-2)

A Tier 3 is not completed as it would only show that the building is deficient as was shown in the Tier 2 evaluation.

H. Nonstructural Evaluation (Tier 2) (from Table 5-3)

Nonstructural assessment is not in the scope of this example.

I. Final Assessment (from Table 6-1)

1. Structural evaluation assessment.

The structure was found to lack strength to resist the prescribed lateral forces. The building is not a serious life safety hazard; however, this building is needed for post-disaster functions and needs to be rehabilitated to be acceptable for Immediate Occupancy.

2. Structural rehabilitation strategy:

The structure must be strengthened to resist seismic forces. The addition of bracing or shear walls will attract forces away from the deficient steel frames and add stiffness to the structure. The bracing or shear walls may be added at the interior or the perimeter of the building.

3. Structural rehabilitation concept:

The addition of braces to the exterior frames is chosen as the rehabilitation concept. The bracing will add negligible weight to the structure; and therefore, less seismic demand compared with the addition of shear walls. The bracing is also less disruptive architecturally than shear walls.

At this point a programming level estimate of material quantities associated with the selected structural rehabilitation concept would be developed.

4. Nonstructural evaluation assessment:

Nonstructural assessment is not in the scope of this example.

5. Nonstructural rehabilitation strategy:

Nonstructural assessment is not in the scope of this example.

6. Nonstructural rehabilitation concept:

Nonstructural assessment is not in the scope of this example.

At this point a cost estimating specialist will develop the programming level cost estimate for the project. This estimate will include the structural seismic rehabilitation costs, based on the material quantities developed by the structural evaluator, along with the costs for nonstructural seismic rehabilitation and all other items associated with the building upgrade.

J. Evaluation Report (from Table 6-2)

At this point an evaluation report would be completed per the steps in Table 6-2. This step is not done for this design example.

The Evaluation Process is complete.

Seismic Rehabilitation Design (Chapter 7)

Since rehabilitation of the structural system was the seismic hazard mitigation method selected , the following procedures are completed.

K. Rehabilitation (from Table 7-1)

1. Review Evaluation Report and other available data:

The evaluation report completed earlier was reviewed along with the available drawings.

2. Site Visit

The site was visited during the building evaluation. No further meaningful information could be gathered by another visit.

3. Supplementary analysis of existing building (if necessary)

Supplementary analysis of the existing building is not necessary. The evaluation report contains sufficient detail to commence with the rehabilitation design.

4. Rehabilitation concept selection

See step I.3 for discussion.

5. Rehabilitation design

The addition of braces adds substantial strength and stiffness to the structure, leading to low ductility demands in the building framing. Therefore, the rehabilitation for the structure will be detailed as an ordinary concentrically braced frame (OCBF). The detailing of the new braces and their connections is in accordance with FEMA 302 Chapter 8. FEMA 302 Section 8.4 states that steel structures in high seismic areas shall be designed and detailed in accordance with the AISC Seismic Provisions for Steel Buildings.

Details for the rehabilitation of the structure are shown in the following figures.

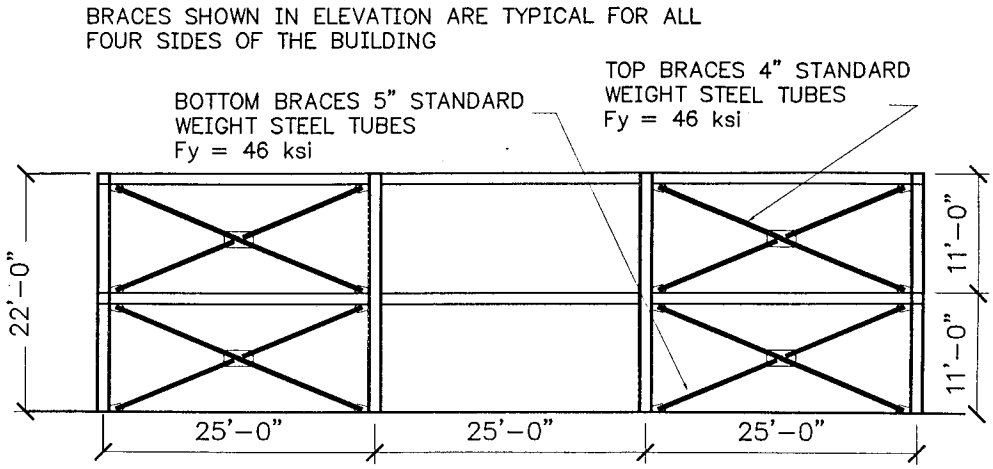

PROPOSED REHABILITATION

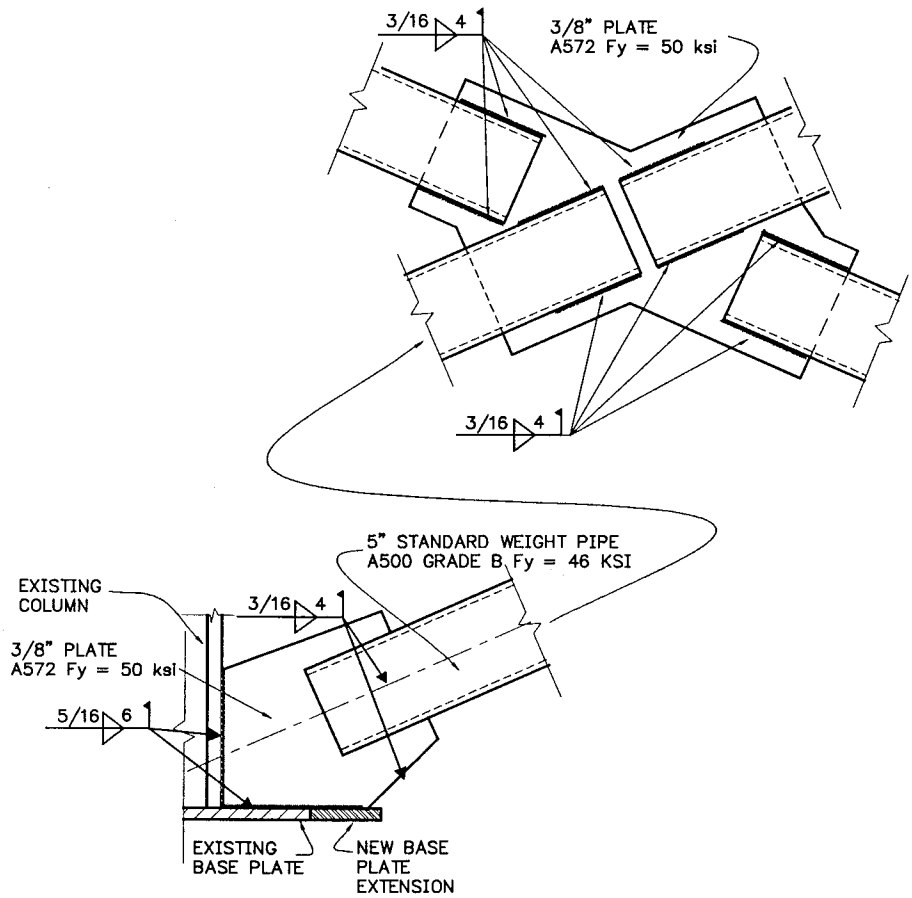

BRACE AND GUSSET DETAILS AT COLUMN BASE

1 in = 25.4 mm
1 ft = 0.305 m

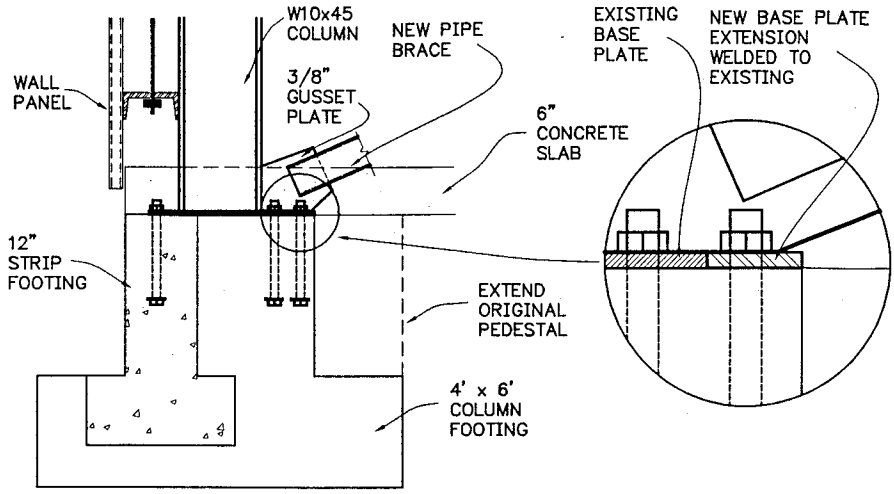

REHABILITATED COLUMN FOOTING DETAILS (ELEVATION)

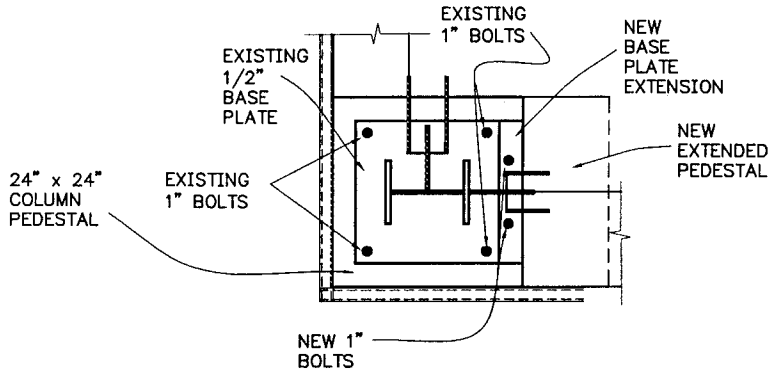

REHABILITATED COLUMN FOOTING DETAILS (PLAN)

6. *Confirming evaluation of rehabilitation*

   a. *Analytical Procedures:*

The analytical procedure to be used for this structure (per the scope of the problem) is the Nonlinear Static Procedure of FEMA 273 Section 3.3.3. The NSP requires the construction of a load versus deformation pushover curve for the structure along each orthogonal axis.

Pushover Analysis:

The structure is analyzed using the Nonlinear Static Procedure (NSP) described in FEMA 273 Section 3.3.3. A nonlinear mathematical model of the structure is subjected to lateral loads until the displacement of the control node in the mathematical model exceeds a target displacement. The gravity loads represented from Equation 7-1of this document and Equation 3-3 of FEMA 273 shall be applied to appropriate elements and components of the mathematical model during the NSP.

- *Control Node:* The control node is taken as the center of mass at the roof of the building. The displacement of the control node is compared with the target displacement-a displacement that characterizes the effects of earthquake shaking.

- *Lateral Load Patterns:* Lateral loads are applied to the building in profiles that approximately bound the likely distribution of inertia forces in an earthquake. FEMA 273 Section 3.3.3.2 requires that two force distributions be used for each orthogonal direction.

  Load Pattern 1:

  The first pattern used, termed the uniform pattern, is based on lateral forces that are proportional to the total mass at each floor level.

  Weight of roof = 180 kips (801 kN)
  Weight of second floor = 320 kips (1423 kN)
  Total Weight = 500 kips (2224 kN)

  Proportion of lateral force to roof = 180 / 500 = 0.36
  Proportion of lateral force to second floor = 320 / = 0.64

  Load Pattern 2:

  The second lateral load pattern is represented by the values of C_{vx} given in FEMA 273 Equation 3-8. This load pattern may only be used if more than 75% of the total mass participates in the fundamental mode in the direction under consideration.

$$C_{vx} = \frac{w_x h_x^k}{\sum w_i h_i^k} \qquad \text{(FEMA 273 Eq. 3-8)}$$

Diaphragm	Weight (kips)	Height (ft)	$w_x h_x^k$ (kft)	C_{vx}
Roof	180	22	3960	0.53
Second Floor	320	11	3520	0.47

  Proportion of lateral load to roof = 0.53
  Proportion of lateral load to second floor = 0.47

- *Period Determination.* The effective fundamental period T_e in the direction under consideration is calculated using the force-displacement relationship of the NSP. The nonlinear relation between base

shear and displacement of the control node is replaced with a bilinear relation to estimate the effective lateral stiffness, K_e, and the yield strength, V_y of the building. The effective lateral stiffness is taken as the secant stiffness calculated at a base shear force equal to 60% of the yield strength. The effective fundamental period Te is calculated as:

$$T_e = T_i \sqrt{\frac{K_i}{K_e}} \qquad \text{(FEMA 273 Eq. 3-10)}$$

- *Analysis of Three-Dimensional Model:* Static lateral forces are imposed on the mathematical model corresponding to the mass distribution at each floor level. The centers of mass and rigidity coincide for the rehabilitated structure producing no actual torsion. FEMA 273 Section 3.2.2.2 states that in buildings with rigid diaphragms the effects of accidental torsion shall be considered if the maximum lateral displacement due to this effect at any point of the floor diaphragm exceeds the average displacement by more than 10%. The ratio for this building is less than 1.1 (calcs not shown), and therefore, torsion is neglected.

- *Primary and Secondary Actions, Components, and Elements:* All of the existing frames and the new bracing are included in the nonlinear model of the building.

- *Deformation- and Force-Controlled Actions:* The deformation-controlled actions monitored in the analysis include flexure in the beams and columns, and axial forces in the braces. The force-controlled actions include diaphragm shear and connection strength.

- *Multidirectional Excitation Effects (per FEMA 273 Section 3.2.7):* This columns of this structure resist forces in both directions. The requirement that multidirectional excitation effects be considered is satisfied by designing elements for the forces and deformations associated with100% of the seismic displacement in one direction plus the forces associated with 30% of the seismic displacements in the perpendicular direction.

- *Component Gravity Loads:* The gravity load effects are evaluated for:

$$Q_G = 1.2\ Q_D + 0.5Q_L + 0.2\ Q_S \qquad \text{(Eq. 7-1)}$$
$$Q_G = 0.9\ Q_D \qquad \text{(FEMA 273 Eq. 3-3)}$$

- *Mathematical Model of Structure:* The Nonlinear Pushover Analysis of the structure was done using SAP 2000 computer software. The nonlinear action of the structure is modeled by adding hinges at locations in the structure expected to see nonlinear action. The hinge properties are based on the generalized load-deformation behavior described in FEMA 273 (see Figure 5-1 of FEMA 273). The curve in Figure 5-1 is described by the parameters Q/Q_{CE}, d, e, and c. The expected strength, Q_{CE}, is determined in accordance with the methods in Chapter 5 of FEMA 273. The nonlinear modeling parameters d, e, and c, and the nonlinear acceptance criteria are contained in the various tables in Chapter 7 of TI 809-04.

  The nonlinear hinges inputted into the model of the structure include:

<u>Brace Axial Hinges:</u>

The load versus axial deformation relationship given in FEMA 273 Figure 5-1 and TI 809-04 Table 7-11 are used to model the braces. The parameters Δ and Δ_y are axial deformation and axial deformation at brace buckling.

Q_{CE} = Axial compression strength; The compressive strength of the brace is determined in accordance with AISC 1994 LRFD specifications for columns and other compression members, with the expected strength used in place of the nominal design strength by replacing F_y with F_{ye} (the equations to follow reflect this change). The expected yield strength, F_{ye}, is defined in the AISC Seismic Provisions as:

$F_{ye} = R_y F_y$ (AISC Seismic Provisions Eq. 6-1)

where $R_y = 1.1$ for A500 Type B 46 ksi steel

$F_{ye} = (1.1)(46\text{ ksi}) = 50.6\text{ ksi}$

Braces at bottom level:
The braces at the bottom level are 5" standard weight pipes

$A_g = 4.30\text{ in.}^2$, r = 1.88 in., Outside diameter (d) = 5.563", wall thickness (t) = 0.258"

d/t = 5.563" / 0.258" = 21.6

$1500/\sqrt{F_y} = 1500/\sqrt{46} = 221 > 21.6$

The modeling parameters from TI 809-04 Table 7-11 are:
Compression braces: d = 1.0, e = 10, c = 0.4, deformation acceptability = 0.8*
Tension braces: d = 12, e = 12, c = 0.8, deformation acceptability = 0.8*

*(*Note: At the time of publication of this document the deformation acceptability for braces in FEMA 273 Table 5-8 and TI 809-04 was equal to 0.8 for the Immediate Occupancy Performance Level. A deformation acceptability of 1.0 would mean that all of the braces would remain elastic when the structure was pushed to the target displacement. The 0.8 means that the braces would contain 20% more strength than they needed to remain elastic. It is expected that the 0.8 value will be changed to 1.0 in future updates to FEMA 273 and TI 809-04. However, for this design example the 0.8 value will be used.)*

The length of the braces = 27.3'

FEMA 273 Section 5.5.2.3 states that the effective length for cross bracing configurations where both braces are attached to a common gusset plate where they cross at their midpoints is taken as 0.5 times the total length. However, for this example, the more conservative value of 0.67 times the total length for out-of-plane buckling shown in TI 809-04 figure 7-21is used.

$Q_{CE} = P_{CE} = A_g F_{cre}$ (AISC LRFD Eq. E2-1)

$\lambda_c = \frac{KL}{r\pi}\sqrt{F_y / E}$ (AISC LRFD Eq. E2-3)

$$\lambda_c = \frac{(0.67)(27.3')(12''/')}{(1.88'')(\pi)}\sqrt{\frac{46\text{ksi}}{29000\text{ksi}}} = 1.48 < 1.5$$

$F_{cre} = (0.658)^{\lambda^2} F_{ye}$ (AISC LRFD Eq. E2-2)

$F_{cre} = (0.658)^{\lambda^2}(50.6\text{ksi}) = 20.2\text{ ksi}$

$Q_{CE} = (4.30\text{ in}^2)(20.2\text{ ksi}) = 87\text{ kips } (387\text{ kN})$

$\Delta_y = P_y L/AE = \sigma_y (L/E) = F_{ye} (L/E) = 20.2\text{ ksi } (27.3' \times 12''/') / 29000\text{ ksi} = 0.23''$ (5.8 mm)

For tension, the expected strength is taken as $A_g f_{ye}$ = (4.30" x 50.6 ksi) = 218 kips (970 kN)

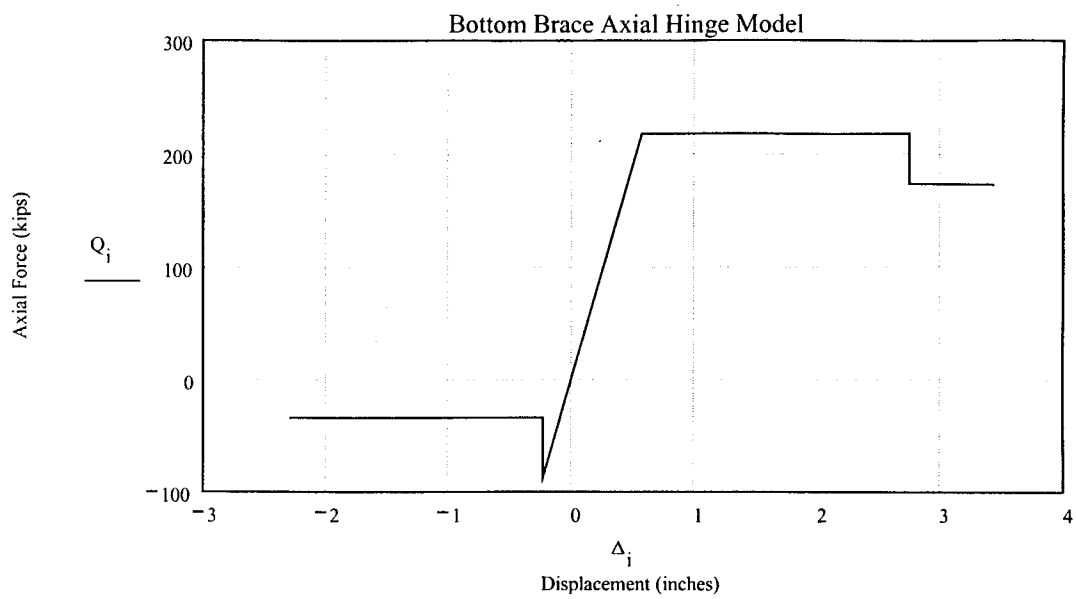

1 kip = 4.448 kN
1 in = 25.4 mm

Braces at Second Story Level:

The hinge properties for the top braces were determined in a similar manner (calcs not shown) to those at the bottom level.
Compressive strength = 41 kips (182 kN)
Tensile strength = 160 kips (712 kN)
F_{cre} = 12.9 ksi
Δ_y = 12.9 ksi (27.3' x 12) / 29000 ksi = 0.15 in (3.8 mm)

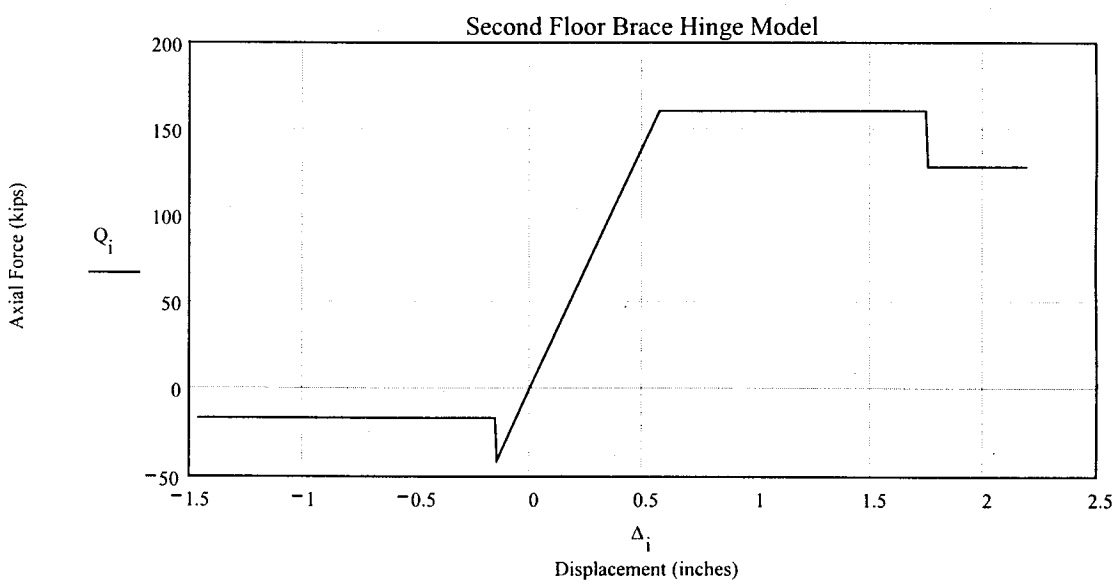

1 kip = 4.448 kN
1 in = 25.4 mm

Beam Hinges:

The development of the beam hinge is shown for one beam only;

F_{ye} is taken as 1.25 F_y for A36 steel.

F_y = 36 ksi steel, F_{ye} = 1.25 F_y = 45 ksi

For a W 14 x 30 beam;
Z = 47.3 in.^{3}, l_b = 25 ft., I_b = 291 in.^{4}

The expected moment strength of beams, Q_{CE} is taken as:

$Q_{CE} = M_{CE} = ZF_{ye}$ (FEMA 273 Eq. 5-3)

Q_{CE} = (47.3 in.3)(45 ksi) = 2129 kip-in (241 kN-m)

The nonlinear modeling and acceptance criteria are taken from TI 809-04 Table 7-22;

d = 10, e = 12, c = 0.6, plastic rotation limit = 2.0

$$\theta_y = \frac{ZF_{ye}l_b}{6EI_b}$$ (FEMA 273 Eq. 5-1)

$$\theta_y = \frac{(47.3\text{in}^3)(45\text{ksi})(25'\text{x}12''/')}{6(29000\text{ksi})(291\text{in}^4)} = 0.0126\,\text{rad}$$

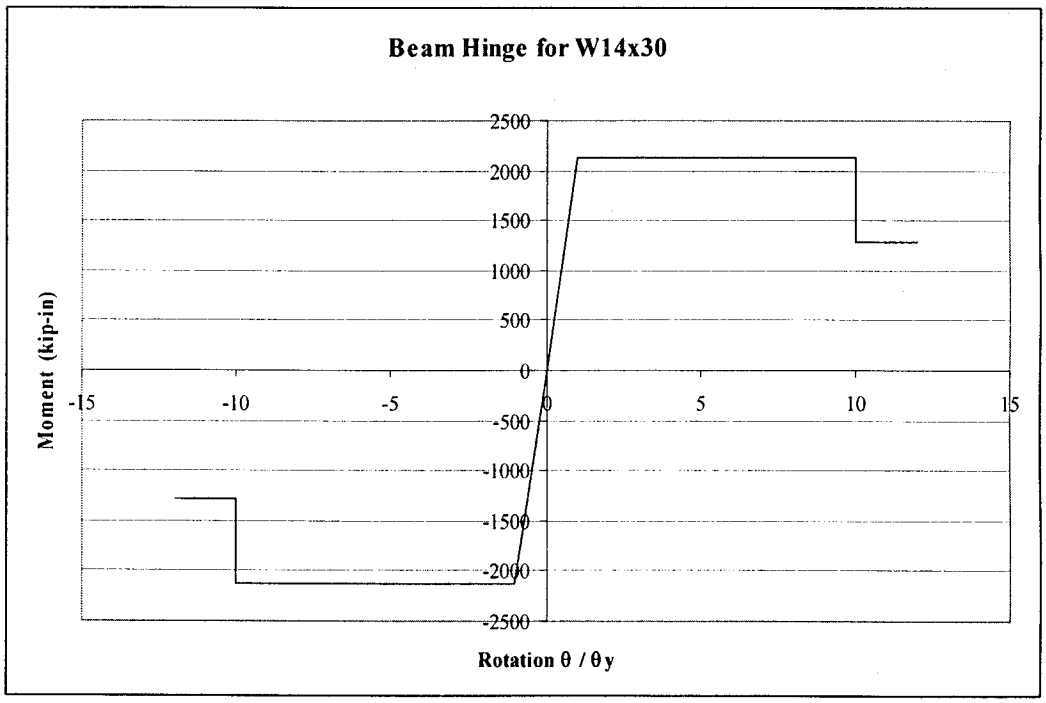

1 kip-in = 0.113 kN-m

Column Hinges:

All columns are W 10 x 45
$Z_x = 54.9$ in.^{3}, $Z_y = 20.3$ in.^{3}, $A_g = 11.5$ in.^{2}

The column hinges consider the axial and flexural interaction effects. The flexural capacity of the columns is based on:

$$Q_{CE} = M_{CE} = 1.18ZF_{ye}\left(1-\frac{P}{P_{ye}}\right) \le ZF_{ye} \qquad \text{(FEMA 273 Eq. 5-4)}$$

where;

Z = Plastic modulus in direction under consideration,
$F_{ye} = 1.25\ f_y = 1.25(36\text{ ksi}) = 45$ ksi,
$P_{ye} = A_gF_{ye} = (13.3\text{ in.}^2)(45\text{ ksi}) = 599$ kips (2664 kN)
P = Axial force in the member

Strong direction: $ZF_{ye} = (54.9\text{ in.}^3)(45\text{ ksi}) = 2471$ kip-in (279 kN-m)
Weak direction: $ZF_{ye} = (20.3\text{ in.}^3)(45\text{ ksi}) = 914$ kip-in (103 kN-m)

The nonlinear modeling parameters are taken from TI 809-04 Table 7-22 (Note: These are for columns in fully restrained moment frames. The beam-column connections are all fully restrained moment connections. After the braces yield, lateral resistance is provided by the moment frame action. Therefore, the column nonlinear modeling parameters are taken as those for fully restrained moment frames.)

d = 10, e = 12, c = 0.6, plastic rotation limit = 2.0

$$\theta_y = \frac{ZF_{ye}l_c}{6EI_c}\left(1-\frac{P}{P_{ye}}\right) \qquad \text{(FEMA 273 Eq. 5-2)}$$

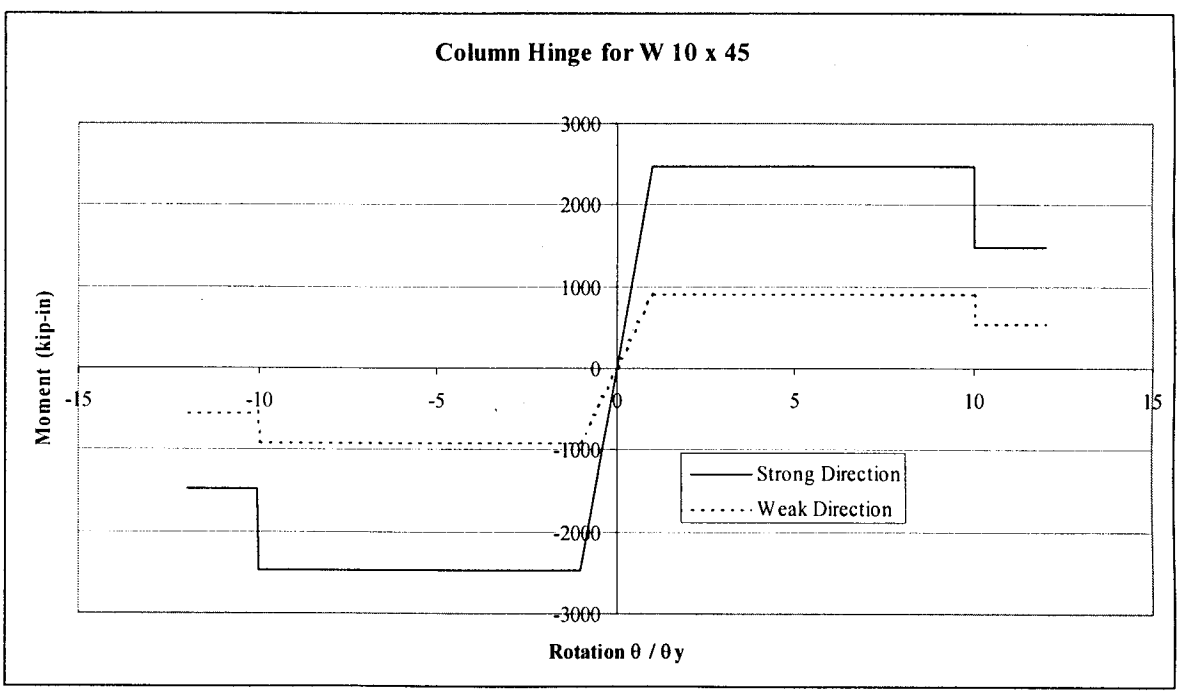

1 kip-in = 0.113 kN-m

- *Conduct Pushover Analysis of Structure:* Pushover analyses were conducted for the structure considering each of the gravity load combinations and the different lateral load patterns. Due to orthogonal effects, the structure is loaded to 30% of the target displacement in the perpendicular direction before beginning the push to 100% of the target displacement in the direction under consideration. A target displacement of ½" was chosen as a first approximation (30% 0.5" = 0.15" push in orthogonal direction).

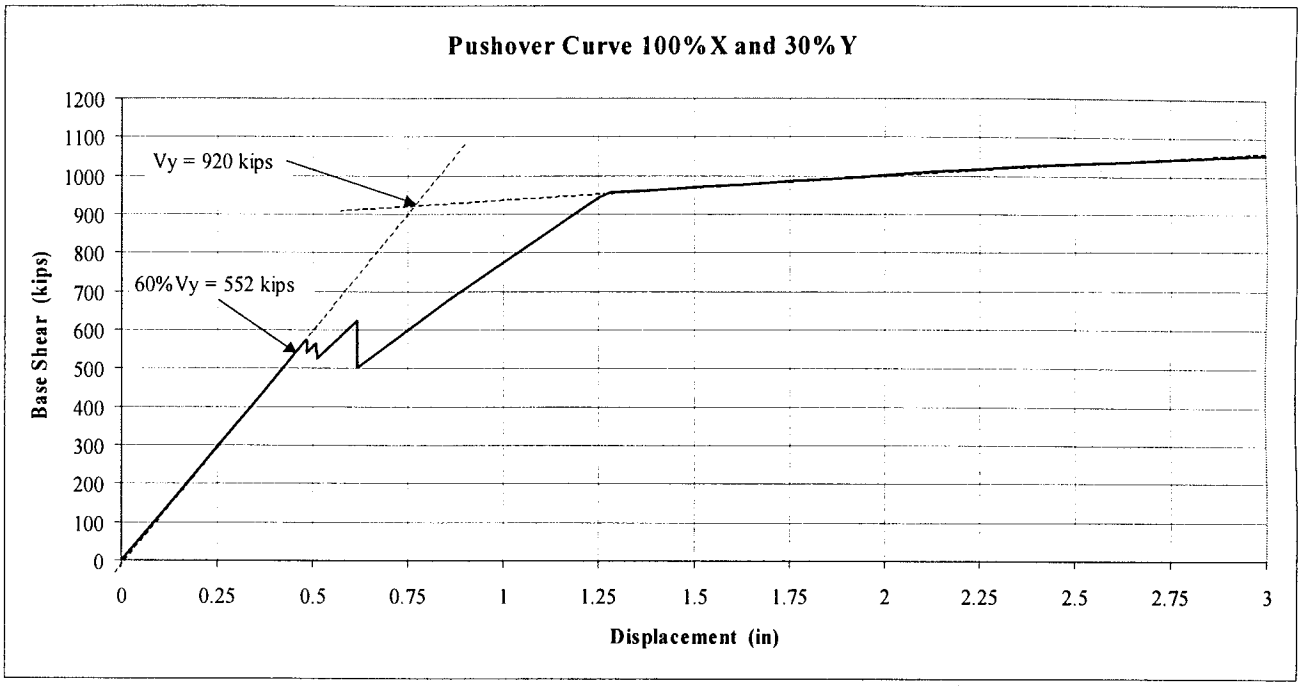

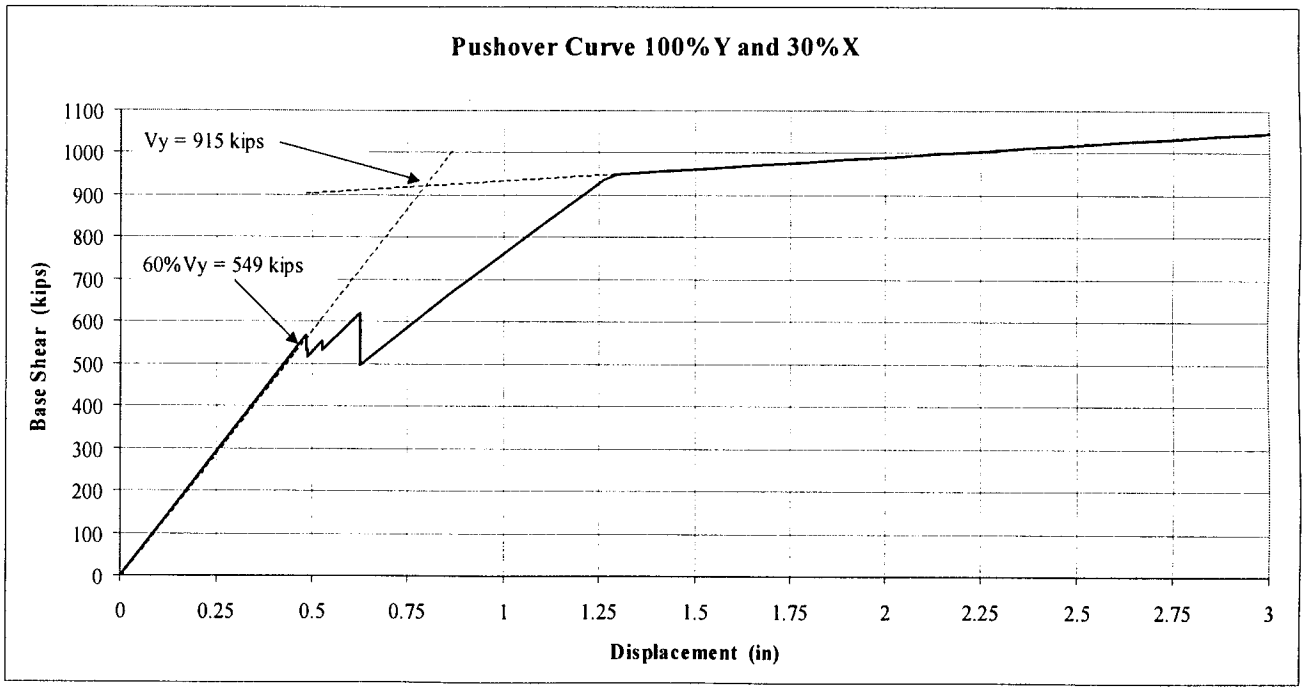

The pushover curves appear very similar due to the buiding symmetry. The first event shown is the buckling of the compression braces. There are a few drops in capacity since the compression braces do not all fail at the same time. The slope of the curve drops to about ½ of the initial stiffness, representing the stiffness of the tension braces. Once the tension braces begin to yield the moment frames begin to resist the lateral loads.

- *Determine Target Displacement:*

The target displacement is determined in accordance with FEMA 273 Section 3.3.3.3.

$$\delta_t = C_0 C_1 C_2 C_3 S_a \frac{T_e^2}{4\pi^2} g \qquad \text{(FEMA 273 Eq. 3-11)}$$

– T_e = Effective fundamental period of the building in the direction under consideration. The method for determining T_e was discussed earlier.

$$T_e = T_i \sqrt{\frac{K_i}{K_e}}$$

The two pushover curves shown earlier indicate the expected yield and 60% expected yield strengths for forces in the x and y directions. Inspection of the curves shows that at 60% of the yield capacity the structure is still elastic. Therefore, the effective stiffness K_e is equal to the initial stiffness K_i.

The initial period T_i was determined from the SAP 2000 model. The periods for the fundamental modes in the x and y directions are both equal to 0.17 seconds.

$T_e = T_i$ (since $K_e = K_i$) ; $T_e = 0.17$ sec

– C_0 = Modification factor to relate spectral displacement and likely building roof displacement. C_0 is taken as the first modal participation factor at the level of the control node. SAP 2000 was used to determine the mode shapes.

$$C_0 = \frac{\sum_{i=1}^{n} W_i \phi_{im}}{\sum_{i=1}^{n} W_i \phi_{im}^2} \phi_{rm}$$

, where W_i are the story weights, ϕ are the modal coefficients for the fundamental period of the structure. The modal coefficients from SAP 2000 are $\phi_{roof} = 0.37$, $\phi_{2nd} = 0.18$ for seismic forces in the x-direction (due to symmetry, the modal coefficients happen to be the same in the y-direction. Normally this isn't the case and modal coefficients for the first fundamental mode in both directions would need to be determined.) The weight of the roof = 180 kips and the weight of the second floor is 320 kips.

$C_0 = [(180\text{ k})(0.37) + (320\text{ k})(0.18)] / [(180\text{ k})(0.37)^2 + (320\text{ k})(0.18)^2] \times (0.37) = 1.35$

$C_0 = 1.31$

– C_1 = Modification factor to relate expected maximum inelastic displacements to displacements calculated for linear elastic response.

$T_0 = S_{D1} / S_{DS} = 0.6 / 1.0 = 0.6$ seconds (FEMA 273 Eq. 2-11)

For $T_e < T_0$ $C_1 = [1.0 + (R-1)T_0/T_e] / R$, in no case may C_1 be taken less than 1.0

$$R = \frac{S_a}{V_y / W} \cdot \frac{1}{C_0}$$ (FEMA 273 Eq. 3-12)

(Calcs shown for x-direction)
V_y = 1140 kips in both directions, C_0 = 1.31 in both directions, W = 648 kips

$$R = \frac{1.0}{920k / 500k} \cdot \frac{1}{1.35} = 0.40$$

C_1 = [1.0 + (0.40 - 1.0)(0.6 / 0.170)] / 0.40= -2.8 < 1.0, use 1.0

C_1 = 1.0 in both directions

- C_2 = Modification factor to represent the effect of hysterisis shape on the maximum displacement response. Values for C_2 are taken from FEMA 273 Table 3-1. For Immediate Occupancy structures the value of C_2 is always equal to 1.0.

  C_2 = 1.0 in both directions

- C_3 = Modification factor to represent increased displacements due to dynamic P-Δ effects. For buildings with positive post-yield stiffness, C_3 shall be set equal to 1.0. The pushover curves in both directions of the building exhibit positive post-yield stiffness behavior. Therefore, C_3 = 1.0.

  C_3 = 1.0 in both directions

Determine Target Displacement:

$$\delta_t = C_0 C_1 C_2 C_3 S_a \frac{T_e^2}{4\pi^2} g, \quad \delta_t = (1.31)(1.0)(1.0)(1.0)(1.0)\frac{(0.170\sec)^2}{4\pi^2}(386.4\,\text{in./sec}^2) = 0.37\,\text{in}$$

δ_t = 0.37 in (9.4 mm) in both directions

Determine Actions and deformations:

Design actions (forces and moments) and deformations are taken as the maximum value determined from the Nonlinear Static Procedure.

The building is to be analyzed for orthogonal effects. Therefore, the building is displaced in one horizontal direction 30%δ_t = (0.37")(0.30) = 0.11" (2.8 mm) and then to the full target displacement in the orthogonal direction. The forces and deflections in the members in the displaced state are determined and checked for acceptance.

<u>Brace Forces and Deformations:</u>

First Story Braces:

The maximum axial force in the braces at the first floor level is 65 kips (289 kN), corresponding to a linear shortening of 0.17" (4.6 mm).

Δ of first story brace = 0.17" (4.6 mm)

Second Story Braces:

The maximum axial force in the braces at the second floor level is 32 kips (142 kN), corresponding to a linear shortening of 0.11" (2.8 mm)

Δ of second story brace = 0.11" (2.8 mm)

Beam Moments:

The beams do not see much lateral loads due to the higher stiffness of the braces.

The maximum moments on the beam sections are:

W 14 x 22: M_{max} = 432 kip-in (48.8 kN-m)
W 14 x 38: M_{max} = 996 kip-in (113 kN-m)
W 14 x 26: M_{max} = 528 kip-in (60 kN-m)
W 16 x 57: M_{max} = 1860 kip-in (210 kN-m)
W 12 x 19: M_{max} = 156 kip-in (17.6 kN-m)
W 12 x 22: M_{max} = 252 kip-in (28.4 kN-m)
W 14 x 30: M_{max} = 624 kip-in (70.5 kN-m)

Column Forces:

The columns resist moments along both their strong and weak axes in addition to axial forces. All of the columns share the same section (W10 x 45) and thus all have the same capacities. Only the forces on the column with the highest demands is shown:

Axial Force:	101 kips (449 kN)
Moment in Strong Direction:	400 kip-in (45.2 kN-m)
Moment in Weak Direction:	48 kip-in (5.4 kN-m)

b. Acceptance criteria: (from FEMA 273 Section 3.4.3.2)

Deformation-Controlled Actions:

Primary and secondary components shall have expected deformation capacities not less than the maximum deformations. Expected deformation capacities are determined considering all coexisting forces and deformations.

Brace Deformations:

Braces at first story level;

Axial shortening = Δ = 0.17" (4.6 mm)

Δ_y = 0.23" (determined previously) (5.8 mm)

Deformation Acceptance = Δ / Δ_y = 0.8

Deformation Demand Ratio = 0.17" / 0.23" = 0.74 < 0.8, OK

Braces at second story level;

Axial shortening = Δ = 0.11" (2.8 mm)

Δ_y = 0.15" (3.8 mm) (determined previously)

Deformation Acceptance = Δ / Δ_y = 0.8

Deformation Demand Ratio = 0.11" / 0.15" = 0.73 < 0.8, OK

Beams:

Beam Section	S_x (in.^{3})	$M_{elastic\ beam}$[1] (kip-in)	Moment Demand (kip-in)	D / C (elastic)
W 14 x 38	54.6	1965.6	996	0.51
W16 x 57	92.2	3319.2	1860	0.58
W 14 x 30	42	1512	624	0.43
W 14 x 22	29	1044	432	0.47
W 14 x 26	35.3	1270.8	528	0.43
W 12 x 19	21.3	766.8	156	0.20
W 12 x 22	25.4	914.4	252	0.27

Note:
1. $M_{elastic\ beam} = S_x F_y = S_x$ (36 ksi)

No beams are stressed beyond their elastic limit. Therefore they do not see any inelastic deformations and are found to be acceptable (Note: The D/C ratios are shown for the elastic rather than the plastic limit to show how under-stressed the beams are.)

Columns:

Axial Force: 101 kips (449 kN)
Moment in Strong Direction: 400 kip-in (45.2 kN-m)
Moment in Weak Direction: 48 kip-in (5.4 kN-m)

Axial Force: 107 kips
Moment in Strong Direction: 492 kip-in
Moment in Weak Direction: 42 kip-in

The column hinges consider the axial and flexural interaction effects. The flexural capacity of the columns is based on:

$$Q_{CE} = M_{CE} = 1.18 Z F_{ye}\left(1 - \frac{P}{P_{ye}}\right) \le Z F_{ye} \qquad \text{(FEMA 273 Eq. 5-4)}$$

Strong direction:
$Z_x F_{ye}$ = (54.9 in.^{3})(45 ksi) = 2471 kip-in (279 kN-m)

$$Q_{CE} = M_{CE} = 1.18(2471\,\text{kip}-\text{in})\left(1-\frac{101\,\text{kips}}{599\,\text{kips}}\right) = 2424\,\text{kip}-\text{in}\ \ (274\ \text{kN-m})$$

Weak direction:

Z_yF_{ye} = (20.3 in.^{3})(45 ksi) = 914 kip-in (103 kN-m)

$$Q_{CE} = M_{CE} = 1.18(914\,\text{kip}-\text{in})\left(1-\frac{101\,\text{kips}}{599\,\text{kips}}\right) = 897\,\text{kip}-\text{in}\ (101\ \text{kN-m})$$

Check interaction: $\left(\frac{M_x}{M_{CEx}}+\frac{M_y}{M_{CEy}}\right)=\left(\frac{400}{2424}+\frac{48}{897}\right)=0.22\le 1.0$

From inspection it is seen that all of the columns are well below their elastic limit when pushed to the target displacement. They see no inelastic deformations and are found acceptable.

Force-Controlled Actions:

Primary and secondary components shall have lower-bound strengths Q_{CN} not less than the maximum design actions. Lower-bound strength shall be determined considering all coexisting forces and deformations.

The only force-controlled actions checked in this design example are the brace-gusset plate connections.

Check of gusset plates and bracing connections;

The detailing of the new braces and their connections is in accordance with FEMA 302 Chapter 8. FEMA 302 Section 8.4 states that steel structures in high seismic areas shall be designed and detailed in accordance with the AISC Seismic Provisions for Steel Buildings. The nonlinear deformation acceptance of 0.8 Δ_y for braces in compression requires that the braces remain elastic. Therefore, the braces and their connections are designed as ordinary concentrically braced frames per Section 14 of the AISC Seismic Provisions.

Section 14.5 of the Seismic Provisions state that when the load combinations:

$1.2D+0.5L+0.2S+\Omega_oQ_E$ (AISC Seismic Provisions Eq. 4-1)

$0.9D-\Omega_oQ_E$ (AISC Seismic Provisions Eq. 4-2)

are used to determine the required strength of the members and connections, it is permitted to design the OCBF in structure two stories or less without the special requirements of Sections 14.2 through 14.4. It is assumed that the Q_E term in these combinations has been divided by the appropriate 'R' factor for the framing system (R = 5.0 for OCBF systems from FEMA 302 Table 5.2.2). The overstrength factor, Ω_o = 2.0, is taken from Table I-4-1 of the Seismic Provisions. Therefore, the earthquake effect would be taken as $(\Omega_o/R)Q_E = (2.0 / 5.0)\ Q_E = 0.4\ Q_E$. The forces calculated using the nonlinear pushover analysis at expected deformation level are higher than the forces calculated using 0.4 Q_E. Therefore, the braces and their connections will be designed as force-controlled members for the force levels predicted from the nonlinear analysis. The requirements of Sections 14.2 through 14.4 are waived since force levels used are higher than those from the load combinations in the above equations.

The bracing connections at the bottom level are shown for the example.

The maximum force in the first story braces at the target displacement is 65 kips (289 kN). The expected compressive strength of the braces was determined earlier to be 87 kips (387 kN). The bracing connections are design for the higher 87 kips value to be conservative.

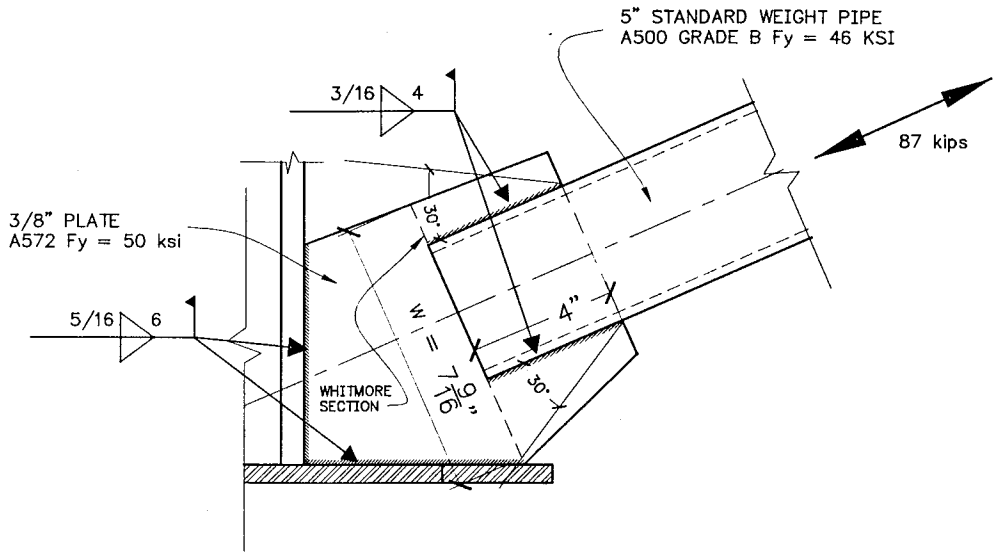

1 in = 25.4 mm
1 kip = 4.448 kN

Connection of Brace to Gusset Plate

The braces are connected to the gusset plates with four fillet welds.

Weld Size = 3/16", E70 Electrodes
Gusset Plate = 3/8" thick, f_y = 50 ksi
Bracing Member = 5" Standard Pipe, f_y = 46 ksi, wall thickness = 0.258"

The braces are connected to the gusset plates with 3/16" fillet welds.

Strength of weld required = 87 kips (387 kN)

Design strength of weld (per AISC LRFD Section J.2.4) with ϕ = 1.0 for this document.
The strength of the weld shall be taken as the lower of the strength of the weld material of the base material.

Strength of bracing member = $\phi F_{BM} A_{BM}$ = (46 ksi)(0.258")length = 11.9 kips / inch
Strength of weld = $\phi F_w A_w$ = (0.6 x 70 ksi)(0.707 x 3/16")length = 5.57 kips / inch (governs)

Weld length required = 87 kips / (5.57 kips / inch) = 15.6" (396 mm)
Four welds per connection, 15.6" / 4 = 3.9", 4" (102 mm) welds are adequate.

Connection of Gusset Plate to Base Plate and Column

The gusset plates are welded to the columns and base plates with 5/16" fillet welds.

Strength of weld = $\phi F_w A_w$ = (0.6 x 70 ksi)(0.707 x 5/16")length = 9.28 kips / inch (governs)
Strength of gusset = $\phi F_{BM} A_{BM}$ = (50 ksi)(3/8")length = 18.8 kips / inch

Horizontal Force Component = 87 kips * (25' / 27.3') = 80 kips (356 kN)
Vertical Force Component = 87 kip * (11' / 27.3') = 35 kips (156 kN)

Horizontal weld length required = 80 kips / 9.28 kips / inch = 8.62 in (219 mm)
Two welds pre connection, 8.62" / 2 = 4.31", 6" (152 mm) welds are adequate.

Vertical weld length required = 35 kips / 9.28 kips / inch = 3.77 in (96 mm)
Two welds pre connection, 3.77" / 2 = 1.89", 6" (152 mm) welds are adequate.

Check of Gusset Plate Capacity:

Yielding of Whitmore's area of gusset plate:

Whitmore's area is an effective area of gusset plate though the last line of connectors or end of the welds established by drawing 30-degree lines from the first connector or start of the welds. The "direct" stress in the gusset plate is calculated by dividing the axial force in the member by the area of this effective cross section. The 30-degreee lines for this connection lie outside of the actual plate. Therefore, the effective area is taken to the plate edge boundaries.

Whitmore's Area = A_{gw} = (7.56")(3 / 8") = 2.84 in^2 (18.3 cm^2)
$P_y = A_{gw}F_y$ = (2.84 in.^{2})(50 ksi) = 142 kips (632 kN) > 87 kips (387 kN), OK

Buckling of gusset plate:
(This requirement is waived since this is a low building; however it is checked to be conservative.)

Due to direct compression, a gusset plate can buckle in the areas just beyond the end of the bracing member. The buckling capacity of a gusset plate subjected to direct compression is established from:

$P_{cr} = A_{gw}F_{cr}$

where F_{cr} is the critical stress acting on the longest 1-inch wide gusset strip within the effective width. These 1-inch strips are treated as columns and AISC LRFD column equations are used to establish F_{cr}. The K, effective length factor for gusset plates is suggested to be taken as 1.2. This conservative value is justified based on test results indicating that there is a possibility of end of bracing member moving out of plane.

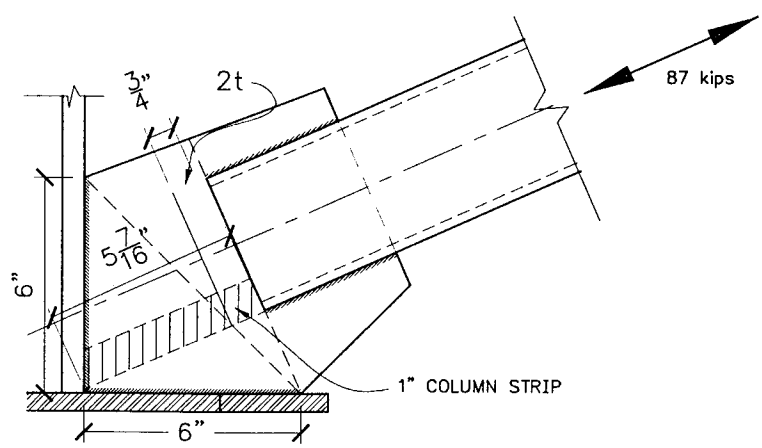

For a 1-inch strip:

$A = (1")(3/8") = 0.375\ \text{in.}^2$, $I = 1/12\ (1")(3/8")^3 = 0.00439\ \text{in.}^4$, $r = \sqrt{\frac{I}{A}} = \sqrt{\frac{0.0044\ \text{in.}^4}{0.375\ \text{in.}^2}} = 0.11\ \text{in.}$

$$\lambda_c = \frac{KL}{r\pi}\sqrt{\frac{F_y}{E}} = \frac{(1.2)(5.44")}{(0.11")\pi}\sqrt{\frac{50\ \text{ksi}}{29000\ \text{ksi}}} = 0.78 < 1.5$$

$F_{cr} = (0.658)^{\lambda^2} F_y = (0.658)^{(0.78)^2}(50\ \text{ksi}) = 39\ \text{ksi}$

$P_{cr} = (2.84\ \text{in.}^2)(39\ \text{ksi}) = 111\ \text{kips}\ (494\ \text{kN}) > 87\ \text{kips}\ (387\ \text{kN})$, OK

Out-of-plane buckling of brace; Gusset rotation demands;

From the AISC Seismic Provisions, for brace buckling out of the plane of single plate gussets, weak-axis bending in the gusset in induced by member end rotations. This results in flexible end conditions with plastic hinges at midspan in addition to the hinges that form in the gusset plate. Satisfactory performance can be ensure by allowing the gusset plate to develop restraint-free plastic rotations. This requires that the free length between the end of the brace and the assumed line of restraint for the gusset be sufficiently long to permit plastic rotations, yet short enough to preclude the occurrence of plate buckling prior to member buckling. A length of two times the plate thickness is recommended. For a 3/8" gusset plate, a clear distance of 2 x 3/8" = 0.75" (19 mm) is used (see figure).

7. *Prepare construction documents:*

Construction documents are not included for this design example.

8. *Quality assurance / quality control:*

QA / QC is not included for this design example.

D3. One-story Building with Steel Roof Trusses

Building and Site Data.

Building Description.

The French Theater is a one-story infilled steel frame building located at Fort Lewis, Washington. The steel frames are infilled with unreinforced hollow clay tile walls. According to the available drawings and information, the building was originally built in 1932. It was apparently enlarged in 1940. The drawings reviewed were prepared for the 1940 modification and generally represent the existing condition of the original building, but do not provide the detailing and reinforcing information of the original building.

The original building had overall plan dimensions of approximately 48' x 120' (14.6 m x 36.6 m) with the main theater section of 48' x 100' (14.6 m x 30.5 m). The modified building has overall plan dimensions of approximately 80' x 130' (24.4 m x 39.7 m) (consisting of an 80' x 100' (24.4 m x 30.5 m) main theater section and a 30' x 52' (9.2 m x 15.9 m) entrance and lobby area). Only the auditorium section of the building is analyzed for this design example.

Vertical Load Resisting System. The ground floor is a concrete slab poured on excavated ground to form a sloped surface (reinforcing is unknown). The roof consists of Spanish tile on 2" x 6" roofing planks nailed to 3" x 6" nailers. The 3" x 6" nailers are bolted to a steel purlins which span between transverse trusses. The trusses are supported by steel columns. The steel columns along the exterior are infilled with the hollow clay tile walls. The footings consist of individual spread footings for the columns and strip footings along the perimeter of the structures.

Lateral Load Resisting System. The primary lateral-force resisting system consists of horizontal wood sheathing connected to the top flange of the upper chord of the trusses through 3" x 6" wood nailers and steel joists. The lateral load is resisted by the unreinforced masonry shear walls along the exterior. The lateral load is transferred to the walls through the roof diaphragm with contribution from intermediate collectors and steel framing and X-bracing consisting of angles and rods.

The 1940 Modifications. During the 1940 modification, the auditorium portion was widened and the entrance area was enlarged. The auditorium portion was widened from 49'-4" to 80' and the entrance area was enlarged from 39' x 20'-2" to 52' x 30' (Only the auditorium section of the building is analyzed for this design example.) The transverse framing consists of end shear walls and four interior truss-column frame systems. The columns of the two interior trusses were removed and a carrying truss was installed to transfer the vertical load to the adjacent columns.

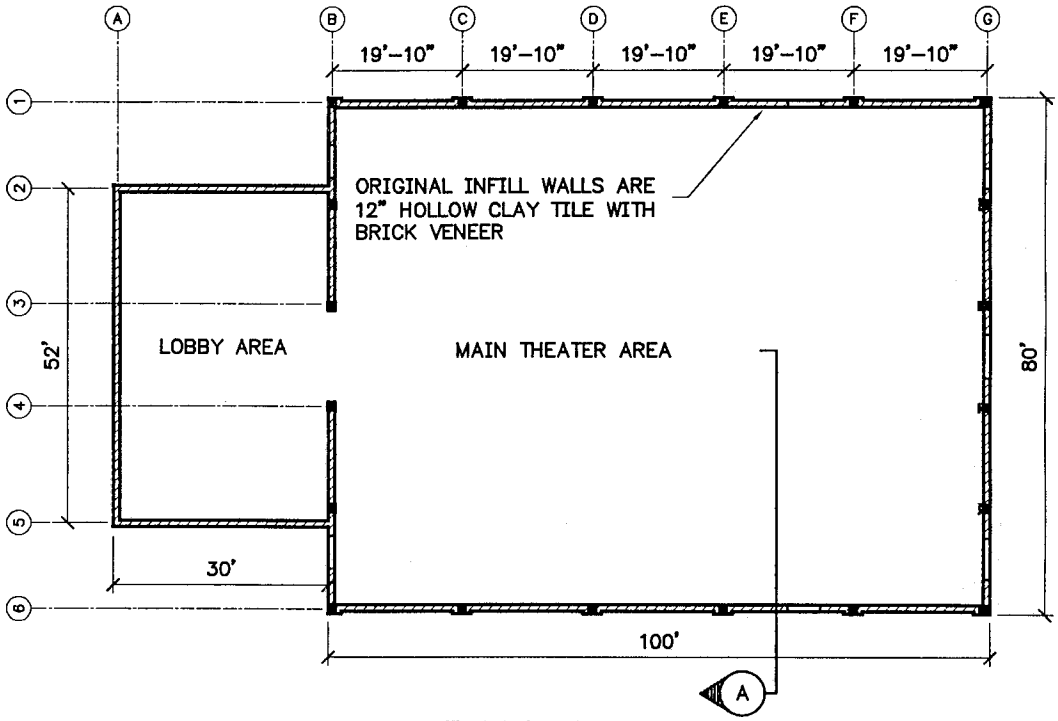

FLOOR PLAN

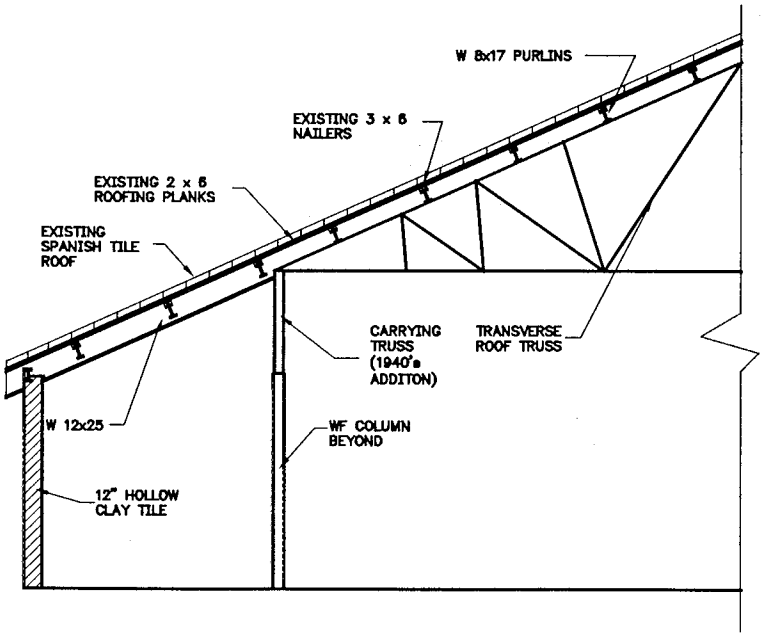

SECTION (A)

1 ft = 0.305 m
1 in = 25.4 mm

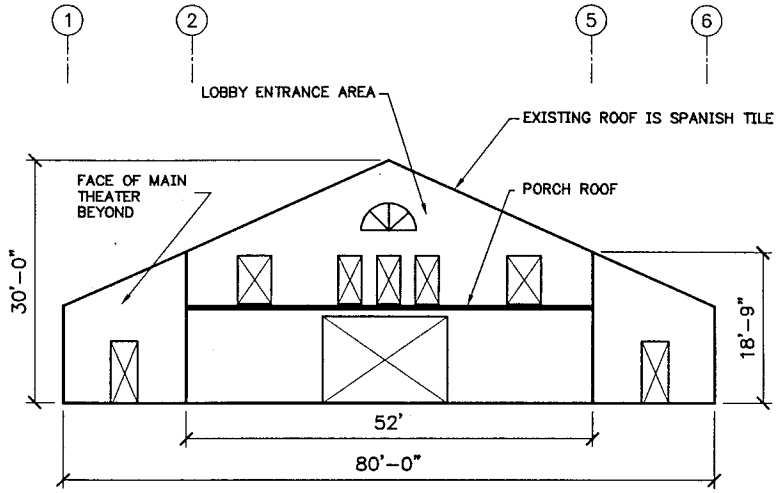

FRONT ELEVATION VIEW OF LOBBY ENTRANCE AREA

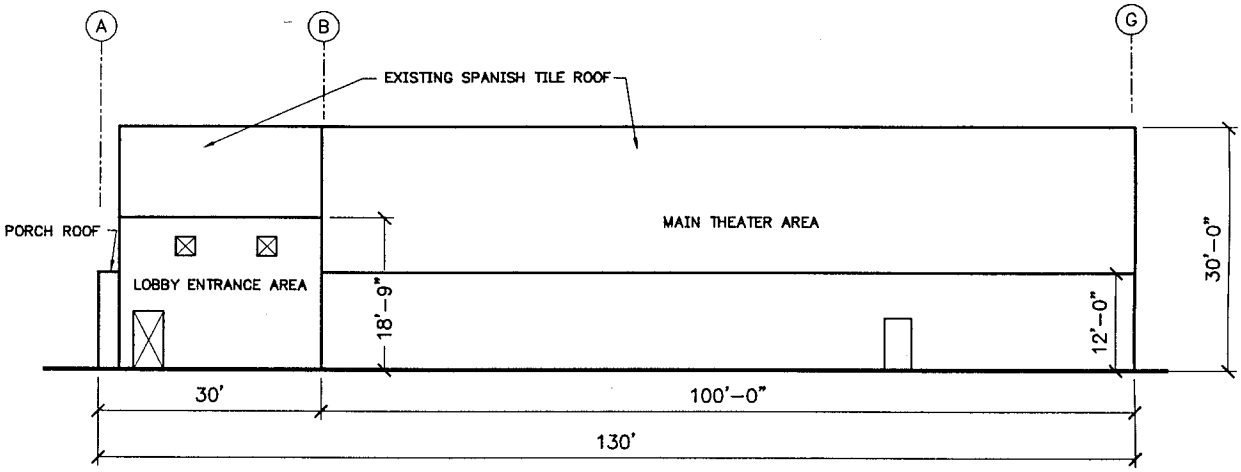

ELEVATION OF WALL LINE 6

1 ft =0.305 m

1 in = 25.4 mm

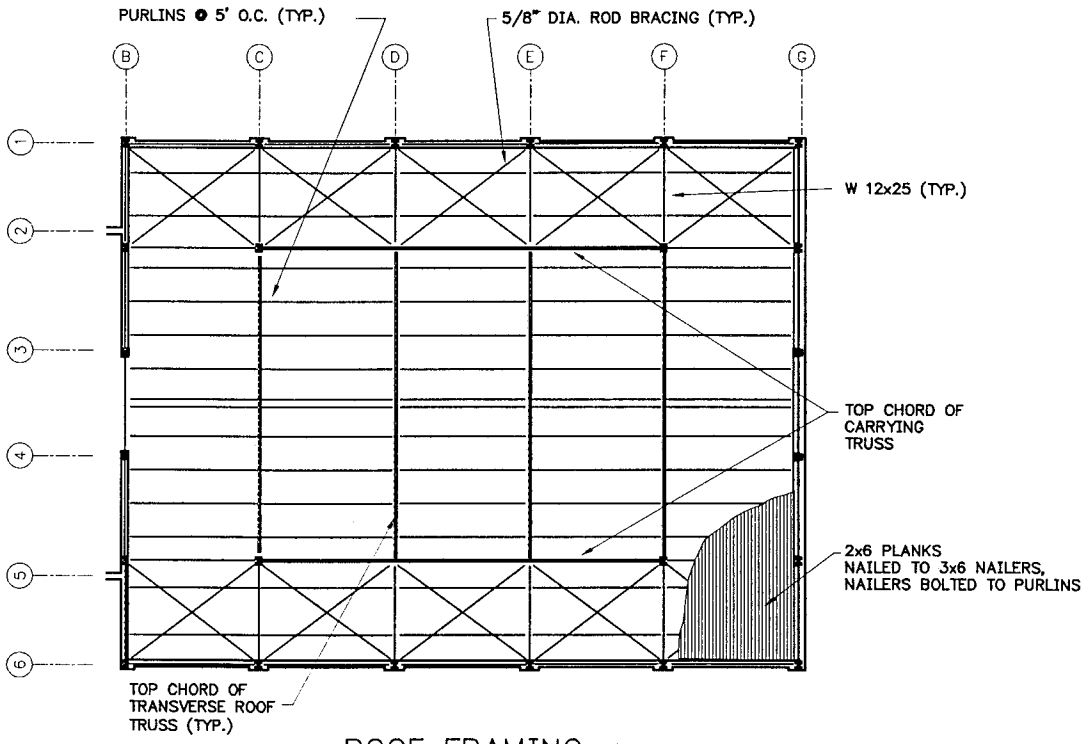

ROOF FRAMING

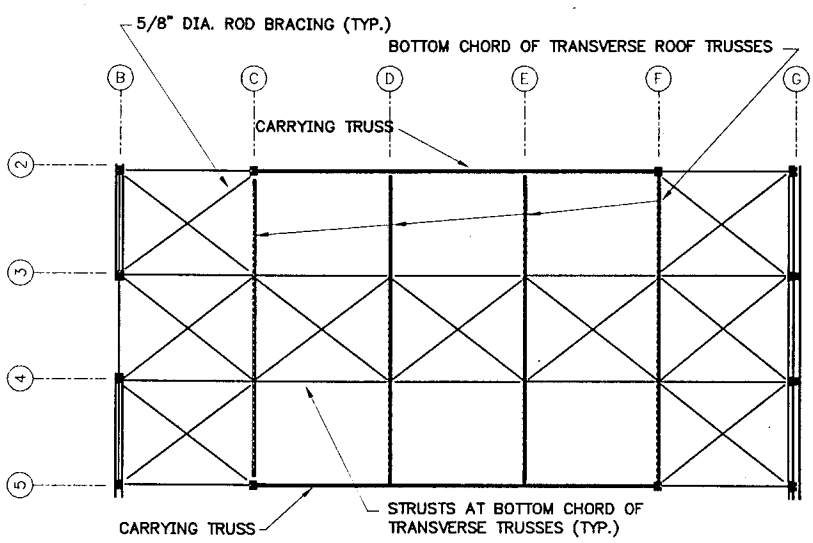

HIGH ROOF FRAMING
(AT BOTTOM CHORD OF ROOF TRUSSES)

1 ft = 0.305 m
1 in = 25.4 mm

A. Preliminary Determinations (from Table 2-1)

1. Obtain building and site data:

a. Seismic Use Group. The theater is a Special Occupancy Structure due to its occupancy (covered structures whose primary occupancy is public assembly with a capacity greater than 300 persons). Therefore, from Table 2-2, the building falls into Seismic Use Group II.

b. Structural Performance Level. This structure is to be analyzed for the Safe Egress Performance Level as described in Table 2-3.

c. Applicable Ground Motions (Performance Objective). Table 2-4 prescribes a ground motion of 2/3 MCE for the Seismic Use Group II, Safe Egress Performance Level. The derivations of the ground motions are described in Chapter 3 of TI 809-04. The spectral accelerations are determined from the MCE maps for the given location.

(1) Determine the short-period and one-second period spectral response accelerations:

$S_S = 1.20$ g (MCE Map No. 9)

$S_1 = 0.39$ g (MCE Map No. 10)

(2) Determine the site response coefficients: A geotechnical report of the building site classifies the soil as Class D (See TI 809-04 Table 3-1). The site response coefficients are determined by interpolation of Tables 3-2a and 3-2b of TI 809-04.

$F_a = 1.02$ (TI 809-04 Table 3-2a)

$F_v = 1.62$ (TI 809-04 Table 3-2b)

(3) Determine the adjusted MCE spectral response accelerations:

$S_{MS} = F_a S_S = (1.02)(1.20) = 1.224$ (TI 809-04 Eq. 3-1)

$S_{M1} = F_v S_1 = (1.62)(0.39) = 0.632$ (TI 809-04 Eq. 3-2)

$S_{MS} \leq 1.5F_a = (1.5)(1.02) = 1.53 > 1.224$, use 1.224 (TI 809-04 Eq. 3-5)

$S_{M1} \leq 0.6F_v = (0.6)(1.62) = 0.96 > 0.632$, use 0.632 (TI 809-04 Eq. 3-6)

(4) Determine the design spectral response accelerations:

$S_{DS} = 2/3\ S_{MS} = (2/3)(1.224) = 0.82$ (TI 809-04 Eq. 3-3)

$S_{D1} = 2/3\ S_{M1} = (2/3)(0.632) = 0.42$ (TI 809-04 Eq. 3-4)

Enter FEMA 310 Table 2.1 with these values to determine the region of seismicity (this information is needed when completing the FEMA 310 Geologic Site Hazards and Foundations Checklist). It is determined that the site is in a region of high seismicity.

d. Determine seismic design category:

Seismic design category: D (based on S_{DS}) (Table 2-5a)

Seismic design category: D (based on S_{D1}) (Table 2-5b)

2. Screen for geologic hazards and foundations. Screening for hazards was performed in accordance with Paragraph F-3 of Appendix F in TI 809-04. It was determined that no hazards existed at the site. Table 4-3 of this document requires that the geologic site hazard and foundation checklist contained in FEMA 310 be completed. See Section C, Structural Screening (Tier 1), for the completed checklist.

FEMA 310 only defines two Performance Levels; Life Safety and Immediate Occupancy. Paragraph 4-2.a of this document states that for evaluations performed in accordance with this document the Immediate Occupancy Performance Level in Table 3-3 of FEMA 310 will be interpreted as representing the Safe Egress Performance Level for Seismic Use Group II structures. This information is needed since some of the statements in the Geologic Hazards Checklist apply only to Immediate Occupancy structures.

3. *Evaluate geologic hazards.* Not necessary.

4. *Mitigate geologic hazards.* Not Necessary.

B. Preliminary Structural Assessment (from Table 4-1)

This building was evaluated as Example Problem H3 in EI 01S103, dated 01 October 1997. It was determined from the evaluation that the structure definitely needs rehabilitation without further evaluation. Components failing the evaluation were:

- The wood-sheathed diaphragms lack stiffness and strength.
- Horizontal roof bracing does not possess adequate strength for diaphragm forces
- The unreinforced masonry shear walls are overstressed and the walls along grid lines B & G exceed the allowable height as URM shear walls.

C. Structural Screening (Tier 1) (from Table 4-2)

This step has already been completed in Example Problem H3 of TI 809-51. It was determined that the building definitely needs rehabilitation.

1. *Determine applicable checklist.* Table 4-3 requires that the Basic Structural, Supplemental Structural, Basics Nonstructural, Supplemental Nonstructural, and Geologic Site Hazard and Foundations Checklists be completed for Seismic Design Category D structures being evaluated by the Tier 1 procedures. It has already been determined that the structure definitely needs rehabilitation, and therefore, no Tier 1 evaluation is completed. However, for every building being evaluated by this document it is required to complete the Geologic Site Hazards Checklist from FEMA 310.

2. *Complete applicable checklist*

Geologic Site Hazards and Foundations Checklist (FEMA 310, Section 3.8)

Geologic Site Hazards

The following statements shall be completed for buildings in regions of high or moderate seismicity.

C	NC	N/A	LIQUEFACTION: Liquefaction susceptible, saturated, loose granular soils that could jeopardize the building's seismic performance shall not exist in the foundation soils at depths within 50 feet under the building for Life Safety and Immediate Occupancy (Tier 2: Sec. 4.7.1.1). *Geotechnical report states that there is no liquefaction hazard.*
C	NC	N/A	SLOPE FAILURE: The building site shall be sufficiently remote from potential earthquake-induced slope failures or rockfalls to be unaffected by such failures or shall be capable of accommodating any predicted movements without failure (Tier 2: Sec. 4.7.1.2). *Geotechnical report states that there is no slope failure hazard.*
C	NC	N/A	SURFACE FAULT RUPTURE: Surface fault rupture and surface displacement at the building site is not anticipated (Tier 2: Sec. 4.7.1.3). *Geotechnical report states that there is no surface fault rupture hazard.*

Condition of Foundations

The following statement shall be completed for all Tier 1 building evaluations.

(C) NC N/A FOUNDATION PERFORMANCE: There shall be no evidence of excessive foundation movement such as settlement or heave that would affect the integrity or strength of the structure (Tier 2: Sec. 4.7.2.1). *No evidence of excessive foundation movement or settlement.*

The following statement shall be completed for buildings in regions of high or moderate seismicity being evaluated to the Immediate Occupancy Performance Level.

(C) NC N/A DETERIORATION: There shall not be evidence that foundation elements have deteriorated due to corrosion, sulfate attack, material breakdown, or other reasons in a manner that would affect the integrity or strength of the structure (Tier 2: Sec. 4.7.2.2). *No evidence of deterioration.*

Capacity of Foundations

The following statement shall be completed for all Tier 1 building evaluations.

C NC (N/A) POLE FOUNDATIONS: Pole foundations shall have a minimum embedment depth of 4 ft. for Life Safety and Immediate Occupancy (Tier 2: Sec. 4.7.3.1). *There are no pole foundations.*

The following statements shall be completed for buildings in regions of high seismicity and for buildings in regions of moderate seismicity being evaluated to the Immediate Occupancy Performance Level.

(C) NC N/A OVERTURNING: The ratio of the effective horizontal dimension, at the foundation level of the lateral-force-resisting system, to the building height (base/height) shall be greater than $0.6S_a$ (Tier 2: Sec. 4.7.3.2).
$0.6S_a = (0.6)(0.82) = 0.49$ ($S_a = S_{DS}$) The height of the building ≈ 30 ft.
Transverse: (base/height) = 80 / 30 = 2.67 > 0.49, OK
Longitudinal: (base/height) = 100 / 30 = 3.33 > 0.49, OK

(C) NC N/A TIES BETWEEN FOUNDATION ELEMENTS: The foundation shall have ties adequate to resist seismic forces where footings, piles, and piers are not restrained by beams, slabs, or soils classified as Class A, B, or C (Tier 2: Sec. 4.7.3.3). *Footings are restrained by slabs.*

C NC (N/A) DEEP FOUNDATIONS: Piles and piers shall be capable of transferring the lateral forces between the structure and the soil. This statement shall apply to the Immediate Occupancy Performance Level only (Tier 2: Sec. 4.7.3.4). *No piles or piers used in this structure.*

C NC (N/A) SLOPING SITES: The grade difference from one side of the building to another shall not exceed one-half the story height at the location of embedment. This statement shall apply to the Immediate Occupancy Performance Level only (Tier 2: Sec. 4.7.3.5). *This building is not located on a sloping site*

3. *Evaluate screening results.* There are no 'Noncompliant' statements from the Geologic Hazards checklist. The design of the rehabilitation may now be completed.

D. Preliminary Nonstructural Assessment (from Table 4-4)

Nonstructural components are not addressed in this design example.

E. Nonstructural Screening (Tier 1) (from Table 4-5)

Nonstructural components are not addressed in this design example.

F. Structural Evaluation (Tier 2) (from Table 5-1)

The scope of this problem states that seismic evaluation completed in "EXAMPLE PROBLEM H3" in EI 01S103, dated 01 October 1997 is to be used as the starting point for this example. That evaluation found that the building definitely requires rehabilitation. Therefore, no Tier 2 evaluation is necessary.

G. Structural Evaluation (Tier 3) (from Table 5-2)

No Tier 3 evaluation is completed for this structure (see statements in step F above).

H. Nonstructural Evaluation (Tier 2) (from Table 5-3)

Nonstructural components are not addressed in this design example.

I. Final Assessment (from Table 6-1)

1. *Structural evaluation assessment*

   - *Quantitative:* Deficiencies in the structural components have been identified and quantified (see the evaluation results completed for Step F above).

   - *Qualitative:* The building is a serious life safety hazard and rehabilitation is feasible. The structure contains adequate load paths, however, the structural systems require strengthening.

2. *Structural rehabilitation strategy: Since the seismic hazard evaluation was completed previously, the structural rehabilitation strategy and structural rehabilitation concept steps in Table 6-1 will not be completed here. These issues will be addressed in Paragraph K, Rehabilitation, below.*

3. *Structural rehabilitation concept: (See statement above)*

4. *Nonstructural evaluation assessment:*

   Nonstructural components are not considered for this example.

5. *Nonstructural rehabilitation strategy:*

   Nonstructural components are not considered for this example.

6. *Nonstructural rehabilitation concept:*

   Nonstructural components are not considered for this example.

J. Evaluation Report (from Table 6-2)

At this point, an evaluation report would be compiled to summarize the results of the evaluation of structural systems and nonstructural components. An evaluation report is not shown for this design example; however, the items to be included in the report are:

1. *Executive summary*

2. *Descriptive narrative*

- Building and site data
- Geologic hazards
- Structural evaluations
- Nonstructural evaluations

3. *Appendices*

- Prior evaluations
- Available drawings and other construction documents
- Geotechnical report
- Structural evaluation data
- Nonstructural evaluation data

The Evaluation Process is complete.

Seismic Rehabilitation Design (Chapter 7)

Since rehabilitation of the structural system was the seismic hazard mitigation method selected , the following procedures are completed.

K. Rehabilitation (from Table 7-1)

1. Review Evaluation Report and other available data:

The evaluation report completed earlier was reviewed along with the available drawings.

2. Site Visit

The site was visited during the building evaluation. No further meaningful information could be gathered by another visit..

3. Supplementary analysis of existing building (if necessary)

The existing wood plank diaphragm lacks the strength to resist the lateral forces. A quick calculation shows that a plywood overlay would not add enough strength capacity to resist the lateral forces.

Check of diaphragm shear in transverse direction: (Weights taken from Example Problem H3 in EI 01S103)

Weight of existing roof = 320 kips (1423 kN)
Weight of longitudinal walls = 60 kips (267 kN)
Total weight = 380 kips (1690 kN)

Approximate lateral force to be resisted by diaphragm $\approx S_aW$ = 0.82(380 kips) = 312 kips (1388 kN)
Shear to each transverse wall = ½(312 kips) = 156 kips (694 kN)
Diaphragm shear = 156 kips / 80 ft ≈ 2 klf (29 kN / m)

FEMA 273 Section 8.5.8.2 states that the yield capacity for wood panel overlays over straight wood sheathing is approximately 450 plf and that the yield capacity is approximately 65% of the ultimate strength of the diaphragm. Therefore, the ultimate capacity ≈ 450 plf / 0.65 = 692 plf (10.1 kN / m). The ultimate capacity (692 plf) is much less than the required capacity (2 klf); therefore, a wood panel overlay will not work and the roof will need to be replaced with a stronger material.

4. Rehabilitation concept selection

The existing roof will be replaced with a much stronger metal deck diaphragm and the existing heavy Spanish tiles will be replaced by lighter roofing materials. The original 3 x 6 nailers that the wood decking was connected to will be replaced with 3" steel tubing. The new deck is to welded to the tubing, and the tubing is to be welded to the existing WF purlins.

The unreinforced masonry walls will be strengthened by adding a 4" layer of reinforced shotcrete to the walls. The shotcrete is to be reinforced with #4 bars at 18" in both the vertical and horizontal directions and anchored to the existing walls with insert anchors spaced at 24" each way.

5. *Rehabilitation design*

(See figures below for details of rehabilitation)

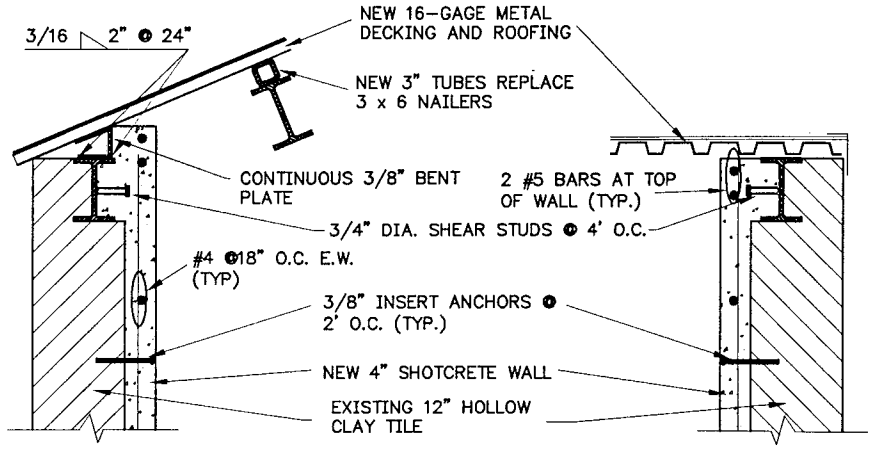

TYPICAL SECTION THROUGH REHABILITATED LONGITUDINAL WALL

TYPICAL SECTION THROUGH REHABILITATED TRANSVERSE WALL

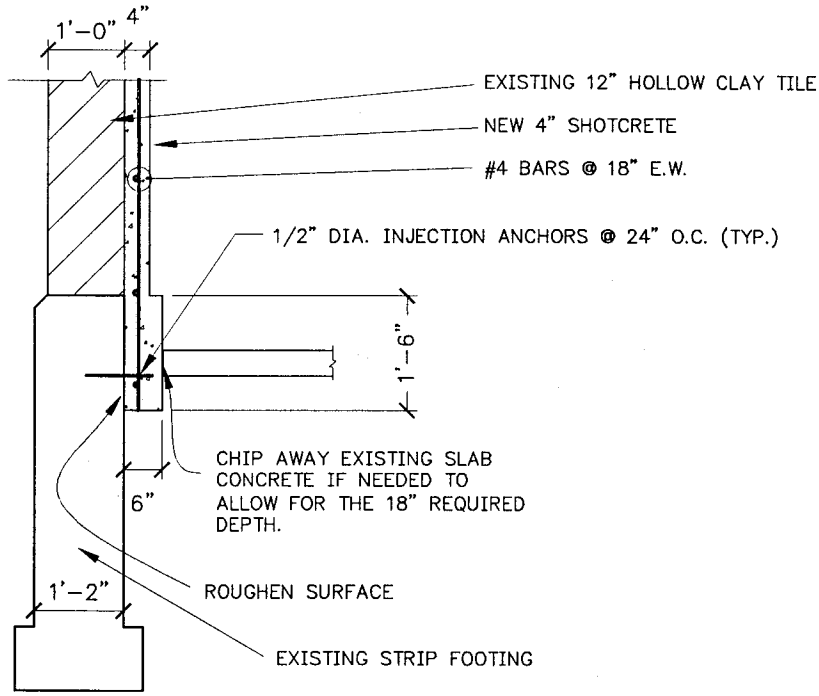

TYPICAL SECTION THROUGH REHABILITATED FOOTING

1 ft = 0.305 m
1 in = 25.4 mm

6. *Confirming evaluation*

a. Analytical procedures: The structure is analyzed with the Linear Static Procedure in accordance with Section 3.3.1 of FEMA 273. Limitations on the use of the procedure are addressed by paragraph 5-2b of TI 809-04 and Section 2.9 of FEMA 273. The design of the shotcrete addition to the infill panels is based on a pseudo lateral force per FEMA 273.

Analysis of Structure using the Linear Static Procedure (LSP) (per Section 3.3.1 of FEMA 273)

In the LSP, the building is modeled with linearly elastic stiffness and equivalent viscous damping that approximate values expected for loading to near the yield point. For this structure, 5% viscous damping is assumed. Design earthquake demands for the LSP are represented by static lateral forces whose sum is equal to the pseudo lateral force defined by FEMA 273 Equation 3-6.

- *Determine pseudo lateral load (per FEMA 273 Section 3.3.1.3)*

$$V = C_1C_2C_3S_aW \qquad \text{(FEMA 273 Eq. 3-6)}$$

Determine seismic weight, W: (per FEMA 273 Sec. 3.3.1.3 A.)

The structure does not have partitions in the main theater area. Therefore, the requirement of using a minimum 10 psf partition is used for determination of the lobby seismic weights only.

Roof

Tar and Gravel Roofing	6.0 psf	
2" Rigid Insulation	3.0 psf	
16 Gage Metal Decking	3.5 psf	
Steel Framing	6.0 psf	
Hung Ceiling, Mech. & Elec.	10.0 psf	
Total =	**28.5 psf**	*1365 Pa*

Exterior Strengthened Walls

12" Hollow Clay Tile w/ Brick Veneer	60.0 psf	
4" New Shotcrete	40.0 psf	
Total =	**100.0 psf**	*4788 Pa*

Lobby Walls 2A-2B and 5A-5B

12" Hollow Clay Tile w/ Brick Veneer	60.0 psf	
Total =	**60.0 psf**	*2873 Pa*

Live Load

Roof Live Load	20 psf	
Total =	**20.0 psf**	*958 Pa*

Component	Length (ft.)	Width or Tributary Height (ft.)	% Solid	Total Area (ft.^{2})	Unit Weight (psf)	Total Weight for Longit. Forces (kips)	Total Weight for Trans. Forces (kips)
Roof Level							
Main theater area between gridlines B & G							
Roofing and Framing	100.0	80	100.0%	8000	28.5	228.0	228.0
Entrance area between gridlines A & B (for loads tributary to wall line B)[2]							
Roofing and Framing	52.0	15	100.0%	780	28.5	0.0	22.2
10 psf Partition loads	52.0	15	100.0%	780	10.0	0.0	7.8
Walls							
Walls of the theater section							
Wall 1B-1G	100.0	6	95.0%	570	100.0	57.0	57.0
Wall 6B-6G	100.0	6	95.0%	570	100.0	57.0	57.0
Wall B1-B6[1]	---	---	---	543	100.0	54.3	54.3
Wall G1-G6[1]	---	---	---	680	100.0	68.0	68.0
Walls of the lobby area[2]							
Wall 5A-5B (only 1/2 length)	15	9.45	95.0%	135	60.0	0.0	8.1
Wall 2A-2B (only 1/2 length)	15	9.45	95.0%	135	60.0	0.0	8.1
					Total Wt. =	**464 kips** (2064 kN)	**511 kips** (2273 kN)

Notes:
1. The area of the transverse walls was determined graphically from the wall elevations.
2. The weight from the lobby area tributary to wall line B includes the lobby wall and roof areas for seismic forces in the transverse direction. No mass from the lobby area is used in the longitudinal direction since the shear forces tributary to the lobby area are resisted directly by the lobby longitudinal shear walls.

Determine Building Period:

The fundamental period of a one-story building with a single span flexible diaphragm is calculated using Method 3 described in FEMA 273 Section 3.3.1.2. (Note: The period calculated using Method 3 will be compared to the period calculated using Method 3 at the end of this section.)

$$T = \sqrt{0.1\Delta_w + 0.078\Delta_d} \qquad \text{(Method 3 Period)}$$

where Δ_w and Δ_d are in-plane wall and diaphragm displacements in inches, due to a lateral load, in the direction under consideration, equal to the weight tributary to the diaphragm.

Determine Δ_d, the diaphragm deflection:

The diaphragm deflection consists of two parts; the flexural deflection and the shear deflection. The flexural deflection is determined in the same manner as that of a simply supported beam. The shotcrete walls are assumed to act as the flanges. The effective depth of the shotcrete wall assumed to act as a flange

is estimated to be six times the shotcrete thickness = 6 * 4" = 24" (The assumption that the effective flanges are equal to six times the wall thickness is taken from paragraph 4-2.B of the "Reinforced Masonry Engineering Handbook", Fifth Edition by James Amrhein.) The area of each of the flanges is thus taken as = (24")(4") = 96 in^2 (619 cm^2). The diaphragm shear deflections are estimated using the flexibility factors contained in the deck manufacture's catalog.

Flexural Deflection, Δ_{flex};
The diaphragm is modeled as a simply supported beam subject to uniform transverse loading, w.

$$\Delta_{flex} = \frac{5wL^4}{384EI} \text{ at midspan}$$

f_c' = Compressive strength of shotcrete = 3000 psi

$$E = w_c^{1.5} 33\sqrt{f_c'} = (120\,\text{pcf})^{1.5} 33\sqrt{3000\text{psi}} = 2376\,\text{ksi} \quad (16371\text{ MPa})$$ (ACI 318 Section 8.5.1)

$$I = 2A_{flange}(\text{depth of diaphragm} / 2)^2$$

Determine weight tributary to the diaphragm in each direction.

Transverse Direction:

	Length (ft.)	Width or Tributary Height (ft.)	% Solid	Total Area (ft.^{2})	Unit Weight (psf)	Total Weight (kips)
Roof Level						
Main theater area between gridlines B & G						
Roofing and Framing	100.0	80	100.0%	8000	28.5	228.0
Walls						
Walls of the theater section						
Wall 1B-1G	100.0	6	95.0%	570	100.0	57.0
Wall 6B-6G	100.0	6	95.0%	570	100.0	57.0
					Total Wt. =	**342 kips**
						(1521 kN)

Longitudinal Direction:

	Length (ft.)	Width or Tributary Height (ft.)	% Solid	Total Area (ft.^{2})	Unit Weight (psf)	Total Weight (kips)
Roof Level						
Main theater area between gridlines 1 & 6						
Roofing and Framing	80.0	100.0	100.0%	8000	28.5	228.0
Walls						
Walls of the theater section						
Wall B1-B6[1]	---	---	---	543	100.0	54.3
Wall G1-G6[1]	---	---	---	680	100.0	68.0
					Total Wt. =	**350 kips**
						(1557 kN)

w_{trans} = (342 kips) / (100 ft) = 3420 plf
w_{long} = (350 kips) / (80 ft) = 4375 plf

$I_{trans} = 2A(d/2)^2 = 2(96\text{ in.}^2)(80\text{ ft} / 2)^2 = 44236800\text{ in.}^4$
$I_{long} = 2A(d/2)^2 = 2(96\text{ in.}^2)(100\text{ ft} / 2)^2 = 69120000\text{ in.}^4$

$$\Delta_{flex\ trans} = \frac{5wL^4}{384EI} = \frac{5(3420\text{ plf})(1'/12")(100\text{ ft}*12"/')^4}{384(2376000\text{ psi})(44236800\text{ in}^4)} = 0.07\text{ in (1.8 mm)}$$

$$\Delta_{flex\ long} = \frac{5wL^4}{384EI} = \frac{5(4375\text{ plf})(1'/12")(80\text{ ft}*12"/')^4}{384(2376000\text{ psi})(69120000\text{ in}^4)} = 0.02\text{ in (0.5 mm)}$$

Determine shear deflection, Δ_{shear}

$$\Delta_{shear} = \frac{q_{ave}L_1F}{10^6} \qquad \text{(TI 809-04 Eq. 7-6)}$$

L_1 = Distance in feet between vertical resisting element (shear wall) and the point to which the deflection is to be determined (diaphragm midspan).
$L_{1\ trans}$ = (100 ft / 2) = 50 ft
$L_{1\ long}$ = (80 ft / 2) = 40 ft

q_{ave} = Average shear in diaphragm in pounds per foot over length L_1
The diaphragm shear force is resisted evenly between the walls on each end of the building in both the longitudinal and transverse directions.

Transverse: $V_{walls\ B\ \&\ G}$ = 342 kips / 2 = 171 kips (761 kN)
v_{max} = V / diaphragm depth = 171 kips / 80 ft = 2125 plf
$q_{ave} = v_{max}$ / 2 = 1063 plf

Longitudinal: $V_{walls\ 1\ \&\ 6}$ = 350 kips / 2 = 175 kips (778 kN)
v_{max} = V / diaphragm depth = 175 kips / 100 ft = 1750 plf
$q_{ave} = v_{max}$ / 2 = 875 plf

F = Flexibility factor: The average microinches a diaphragm web will deflect in a span of 1 foot under a shear of 1 pound per foot (This value is taken from manufacture's catalog.)

F = 6.73 μin / ft / plf (from deck manufacture's catalog)

$$\Delta_{shear\ trans} = \frac{(1063\text{ plf})(50\text{ ft})(6.73\,\mu\text{in / ft / plf})}{10^6} = 0.36\text{ in (9.1 mm)}$$

$$\Delta_{shear\ long} = \frac{(875\text{ plf})(40\text{ ft})(6.73\,\mu\text{in / ft / plf})}{10^6} = 0.24\text{ in (6.1 mm)}$$

Total diaphragm deflections;

$\Delta_{total\ trans} = \Delta_{flex} + \Delta_{shear}$ = 0.07 in. + 0.36 in. = 0.43 in.
$\Delta_{total\ long} = \Delta_{flex} + \Delta_{shear}$ = 0.02 in. + 0.24 in. = 0.26 in.

Determine wall deflections from tributary loads;

The walls each resist ½ of the shear force tributary to the main theater diaphragm and their self-inertial forces.

Shears to walls;
Wall B: Shear from diaphragm = 171 kips, Self-weight = 54.3 kips, V_B = (171 k) + (54.3 k) = 225 kips
Wall G: Shear from diaphragm = 171 kips, Self-weight = 68.0 kips, V_G = (171 k) + (68.0 k) = 239 kips
Wall 1: Shear from diaphragm = 175 kips, Self-weight = 57.0 kips, V_1 = (175 k) + (57.0 k) = 232 kips
Wall 6: Shear from diaphragm = 175 kips, Self-weight = 57.0 kips, V_6 = (175 k) + (57.0 k) = 232 kips

Determine wall rigidities;

The rigidity of the shear walls is made up of contributions from both the original 12" hollow clay tiles and the new 4" shotcrete. Since no testing information is available, the mechanical properties of the hollow clay tile are taken as the default values from FEMA 273 Section 7.3.2. The default values for masonry in good condition are:

- Compressive strength, f'_m (FEMA 273 Sec. 7.3.2.1)
  f'_m = 900 psi
  f'_{me} = 1.25(900 psi) = 1125 psi (7.75 MPa)
  (expected strength = nominal strength x 1.25 per Section 7-2.f.(5)(d)1.i)

- Modulus of elasticity, E_m (FEMA 273 Sec. 7.3.2.2)
  $E_m = 550\ f'_{me} = 550(1125\text{ psi}) = 6.19 \times 10^5$ psi (4265 MPa)

- Shear modulus, G_{me} (FEMA 273 Sec. 7.3.2.5)
  $G_{me} = 0.40E_m = 0.40(6.19 \times 10^5\text{psi}) = 2.48 \times 10^5$ psi (1709 MPa)

- Tensile strength (FEMA 273 Sec. 7.3.2.3)
  f'_{mt} = 20 psi
  f'_{mte} = 1.25(20 psi) = 25 psi (172 kPa)

- Shear strength (FEMA 273 Sec. 7.3.2.4)
  v_m = 27 psi
  v_{me} = 1.25(27 psi) = 33.75 psi (233 kPa)

- Equivalent solid thickness for 12" ungrouted hollow clay tile = 5.5" (140 mm)

The mechanical properties of the concrete are:

- Compressive strength of the new shotcrete, f'_c = 3000 psi (20.7 Mpa)

- Modulus of elasticity, E_c (ACI 318 Sec. 8.5.1)
  E_c = 2376000 psi (16371 MPa)

- Shear modulus, G_{me} (FEMA 273 Table 6-4)
  $G_{me} = 0.40E_c = 0.40(2.376 \times 10^6\text{psi}) = 9.50 \times 10^5$ psi (6548 MPa)

The deflections of a cantilever and fixed-fixed wall pier element are determined from the equations:

$$\Delta_c = \frac{Ph^3}{3EI} + \frac{1.2Ph}{AG}, \text{ cantilever pier deflection}$$

$$\Delta_f = \frac{Ph^3}{12EI} + \frac{1.2Ph}{AG}, \text{ fixed-fixed pier deflection}$$

Cracked section properties are used to determine the wall rigidities. The flexural rigidity of the piers is estimated to be 0.5I (FEMA 273 Table 6-4).

The total rigidity of the walls is equal to the sum of the masonry and concrete contributions.

Transverse walls: The rigidity of the transverse walls is estimated by assuming that the triangular portion is replaced with an equivalent rectangular section.

- **Wall B**: Wall line B is assumed to act as two separate cantilever panel sections. The stiffness of each of the two panels is added to determine the total wall stiffness.

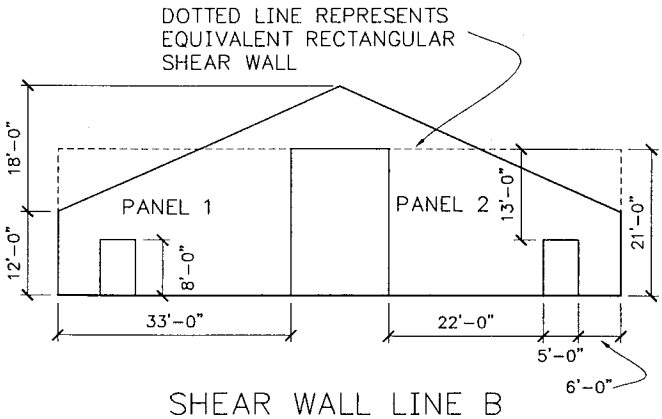

SHEAR WALL LINE B

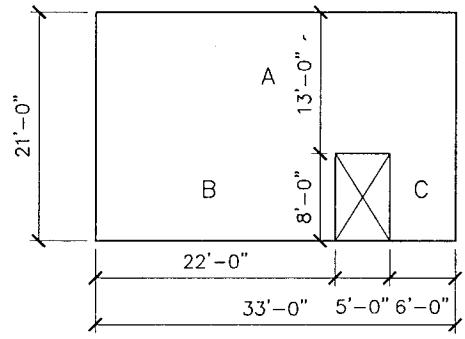

PANEL 2 SHEAR WALL LINE B

Masonry contribution:

Deflection of Solid Wall $\Delta_{solid} := \Delta_c(21 \cdot ft, 33 \cdot ft, 5.5 \cdot in)$ $\Delta_{solid} = 0.001 \cdot in$

Subract Bottom Strip $\Delta_{strip} := \Delta_c(8 \cdot ft, 33 \cdot ft, 5.5 \cdot in)$ $\Delta_{strip} = 0 \cdot in$

$\Delta_A := \Delta_{solid} - \Delta_{strip}$ $\Delta_A = 0.001 \cdot in$

Add Back in Piers B & C $\Delta_B := \Delta_f(8 \cdot ft, 22 \cdot ft, 5.5 \cdot in)$ $\Delta_B = 0 \cdot in$

$\Delta_C := \Delta_f(8 \cdot ft, 6 \cdot ft, 5.5 \cdot in)$ $\Delta_C = 0.003 \cdot in$

$R_{BC} := \frac{1}{\Delta_B} + \frac{1}{\Delta_C}$ $R_{BC} = 3256.15 \cdot \frac{1}{in}$

$\Delta_{BC} := \frac{1}{R_{BC}}$ $\Delta_{BC} = 0 \cdot in$

$\Delta_{panel_2} := \Delta_A + \Delta_{BC}$ $\Delta_{panel_2} = 0.001 \cdot in$

$R_{panel_2} := \frac{1 \cdot kip}{\Delta_{panel_2}}$ $R_{panel_2} = 815.201 \cdot \frac{kip}{in}$

Total rigidity = 2 R

$R_{wall} := 2 \cdot R_{panel_2}$ $R_{wall} = 1630.401 \cdot \frac{kip}{in}$

Concrete contribution:

Deflection of Solid Wall $\Delta_{solid} := \Delta_c(21 \cdot ft, 33 \cdot ft, 4 \cdot in)$ $\Delta_{solid} = 0 \cdot in$

Subract Bottom Strip $\Delta_{strip} := \Delta_c(8 \cdot ft, 33 \cdot ft, 4 \cdot in)$ $\Delta_{strip} = 0 \cdot in$

$\Delta_A := \Delta_{solid} - \Delta_{strip}$ $\Delta_A = 0 \cdot in$

Add Back in Piers B & C $\Delta_B := \Delta_f(8 \cdot ft, 22 \cdot ft, 4 \cdot in)$ $\Delta_B = 0 \cdot in$

$\Delta_C := \Delta_f(8 \cdot ft, 6 \cdot ft, 4 \cdot in)$ $\Delta_C = 0.001 \cdot in$

$R_{BC} := \frac{1}{\Delta_B} + \frac{1}{\Delta_C}$ $R_{BC} = 9093.54 \cdot \frac{1}{in}$

$\Delta_{BC} := \frac{1}{R_{BC}}$ $\Delta_{BC} = 0 \cdot in$

$\Delta_{panel_2} := \Delta_A + \Delta_{BC}$ $\Delta_{panel_2} = 0 \cdot in$

$R_{panel_2} := \frac{1 \cdot kip}{\Delta_{panel_2}}$ $R_{panel_2} = 2276.633 \cdot \frac{kip}{in}$

Total rigidity = 2 R

$R_{wall} := 2 \cdot R_{panel_2}$ $R_{wall} = 4553.266 \cdot \frac{kip}{in}$

Total wall rigidity = masonry + concrete = 1630 k / in. + 4553 k / in = 6183 kips / in (10826 kN / cm)

– **Wall G**

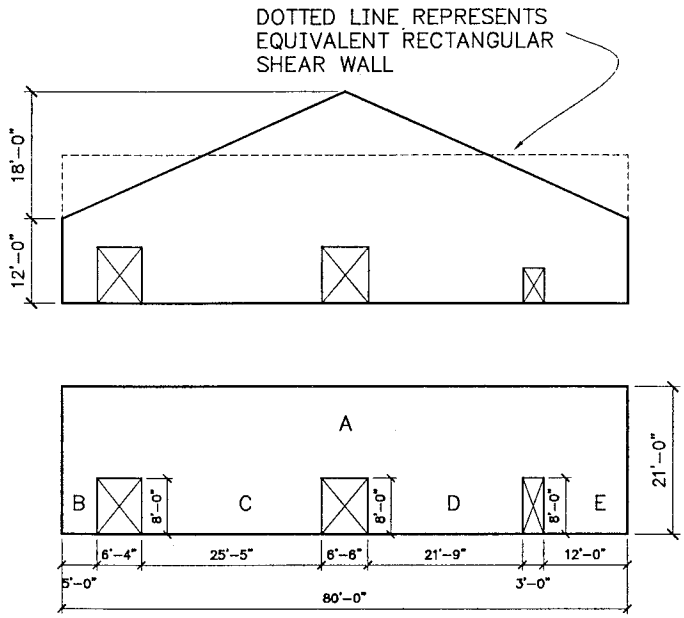

SHEAR WALL LINE G

Masonry contribution:

Deflection of Solid Wall	$\Delta_{solid} := \Delta_c(21 \cdot ft, 80 \cdot ft, 5.5 \cdot in)$	$\Delta_{solid} = 0 \cdot in$
Subract Bottom Strip BCDE	$\Delta_{strip} := \Delta_c(8 \cdot ft, 80 \cdot ft, 5.5 \cdot in)$	$\Delta_{strip} = 0 \cdot in$
	$\Delta_A := \Delta_{solid} - \Delta_{strip}$	$\Delta_A = 0 \cdot in$
Add Back in Piers BCDE	$\Delta_B := \Delta_f(8 \cdot ft, 6 \cdot ft, 5.5 \cdot in)$	$\Delta_B = 0.003 \cdot in$
	$\Delta_C := \Delta_f(8 \cdot ft, 25.5 \cdot ft, 5.5 \cdot in)$	$\Delta_C = 0 \cdot in$
	$\Delta_D := \Delta_f(8 \cdot ft, 21.75 \cdot ft, 5.5 \cdot in)$	$\Delta_D = 0 \cdot in$
	$\Delta_E := \Delta_f(8 \cdot ft, 12 \cdot ft, 5.5 \cdot in)$	$\Delta_E = 0.001 \cdot in$
	$R_{BCDE} := \frac{1}{\Delta_B} + \frac{1}{\Delta_C} + \frac{1}{\Delta_D} + \frac{1}{\Delta_E}$	$R_{BCDE} = 7924.083 \cdot \frac{1}{in}$
	$\Delta_{BCDE} := \frac{1}{R_{BCDE}}$	$\Delta_{BCDE} = 0 \cdot in$
	$\Delta_{wall} := \Delta_A + \Delta_{BCDE}$	$\Delta_{wall} = 0 \cdot in$
	$R_{wall} := \frac{1 \cdot kip}{\Delta_{wall}}$	$R_{wall} = 3229.785 \cdot \frac{kip}{in}$

Concrete contribution:

Deflection of Solid Wall	$\Delta_{solid} := \Delta_c(21 \cdot ft, 80 \cdot ft, 4 \cdot in)$	$\Delta_{solid} = 0 \cdot in$
Subract Bottom Strip BCDE	$\Delta_{strip} := \Delta_c(8 \cdot ft, 80 \cdot ft, 4 \cdot in)$	$\Delta_{strip} = 0 \cdot in$
	$\Delta_A := \Delta_{solid} - \Delta_{strip}$	$\Delta_A = 0 \cdot in$
Add Back in Piers BCDE	$\Delta_B := \Delta_f(8 \cdot ft, 6 \cdot ft, 4 \cdot in)$	$\Delta_B = 0.001 \cdot in$
	$\Delta_C := \Delta_f(8 \cdot ft, 25.5 \cdot ft, 4 \cdot in)$	$\Delta_C = 0 \cdot in$
	$\Delta_D := \Delta_f(8 \cdot ft, 21.75 \cdot ft, 4 \cdot in)$	$\Delta_D = 0 \cdot in$
	$\Delta_E := \Delta_f(8 \cdot ft, 12 \cdot ft, 4 \cdot in)$	$\Delta_E = 0 \cdot in$
	$R_{BCDE} := \frac{1}{\Delta_B} + \frac{1}{\Delta_C} + \frac{1}{\Delta_D} + \frac{1}{\Delta_E}$	$R_{BCDE} = 22129.802 \cdot \frac{1}{in}$
	$\Delta_{BCDE} := \frac{1}{R_{BCDE}}$	$\Delta_{BCDE} = 0 \cdot in$
	$\Delta_{wall} := \Delta_A + \Delta_{BCDE}$	$\Delta_{wall} = 0 \cdot in$
	$R_{wall} := \frac{1 \cdot kip}{\Delta_{wall}}$	$R_{wall} = 9019.908 \cdot \frac{kip}{in}$

Total wall rigidity = masonry + concrete = 3230 k / in + 9020 k / in = 12250 kips / in (21450 kN / cm)

Longitudinal Walls

- **Walls 1 & 6** (These walls have identical elevations, and therefore, the same rigidities)

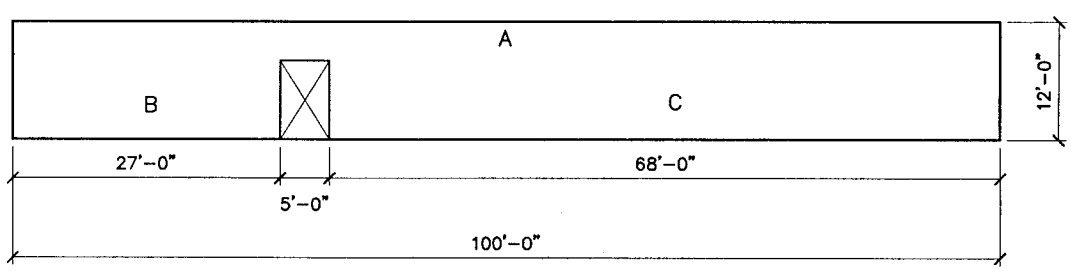

SHEAR WALL LINES 1 & 6

Masonry contribution:

Deflection of Solid Wall $\Delta_{solid} := \Delta_c(12 \cdot ft, 100 \cdot ft, 5.5 \cdot in)$ $\Delta_{solid} = 0 \cdot in$

Subract Bottom Strip $\Delta_{strip} := \Delta_c(8 \cdot ft, 100 \cdot ft, 5.5 \cdot in)$ $\Delta_{strip} = 0 \cdot in$

$\Delta_A := \Delta_{solid} - \Delta_{strip}$ $\Delta_A = 0 \cdot in$

Add Back in Piers B & C $\Delta_B := \Delta_f(8 \cdot ft, 27 \cdot ft, 5.5 \cdot in)$ $\Delta_B = 0 \cdot in$

$\Delta_C := \Delta_f(8 \cdot ft, 68 \cdot ft, 5.5 \cdot in)$ $\Delta_C = 0 \cdot in$

$R_{BC} := \frac{1}{\Delta_B} + \frac{1}{\Delta_C}$ $R_{BC} = 13170.861 \cdot \frac{1}{in}$

$\Delta_{BC} := \frac{1}{R_{BC}}$ $\Delta_{BC} = 0 \cdot in$

$\Delta_{wall} := \Delta_A + \Delta_{BC}$ $\Delta_{wall} = 0 \cdot in$

$R_{wall} := \frac{1 \cdot kip}{\Delta_{wall}}$ $R_{wall} = 8768.435 \cdot \frac{kip}{in}$

Concrete contribution:

Deflection of Solid Wall $\Delta_{solid} := \Delta_c(12 \cdot ft, 100 \cdot ft, 4 \cdot in)$ $\Delta_{solid} = 0 \cdot in$

Subract Bottom Strip $\Delta_{strip} := \Delta_c(8 \cdot ft, 100 \cdot ft, 4 \cdot in)$ $\Delta_{strip} = 0 \cdot in$

$\Delta_A := \Delta_{solid} - \Delta_{strip}$ $\Delta_A = 0 \cdot in$

Add Back in Piers B & C $\Delta_B := \Delta_f(8 \cdot ft, 27 \cdot ft, 4 \cdot in)$ $\Delta_B = 0 \cdot in$

$\Delta_C := \Delta_f(8 \cdot ft, 68 \cdot ft, 4 \cdot in)$ $\Delta_C = 0 \cdot in$

$R_{BC} := \frac{1}{\Delta_B} + \frac{1}{\Delta_C}$ $R_{BC} = 36782.624 \cdot \frac{1}{in}$

$\Delta_{BC} := \frac{1}{R_{BC}}$ $\Delta_{BC} = 0 \cdot in$

$\Delta_{wall} := \Delta_A + \Delta_{BC}$ $\Delta_{wall} = 0 \cdot in$

$R_{wall} := \frac{1 \cdot kip}{\Delta_{wall}}$ $R_{wall} = 24487.848 \cdot \frac{kip}{in}$

Total wall rigidity = masonry + concrete = 8768 k / in. + 24488 k / in = 33256 kips / in (58231 kN / cm)

The wall deflections due to the lateral loads are:

Wall Line	Shear to Wall (kips)	Wall Rigidity (kips / in)	Wall Deflection (in)	Wall Deflection (mm)
B	225	6183	0.036	0.924
G	239	12250	0.020	0.496
1	232	33256	0.007	0.177
6	232	33256	0.007	0.177

The in-plane diaphragm and wall deflections are used to determine the building period from the equation:
$T = \sqrt{0.1\Delta_w + 0.078\Delta_d}$

Transverse Direction: The walls in the transverse direction, B and G, have different rigidities. The shorter the period of a structure, the higher the shear forces. Therefore, the smaller wall deflection is used (Wall line G) to produce a shorter building period.

$$T = \sqrt{0.1(0.020") + 0.078(0.43")} = 0.19\,\text{sec}$$

Longitudinal Direction: The longitudinal walls have the same rigidity, and therefore, produce the same building period.

$$T = \sqrt{0.1(0.007") + (0.078)(0.26")} = 0.14\,\text{sec}$$

Compare with period using Method 1 with $C_t = 0.020$ and h = 30', T = 0.26 sec > 0.19 and 0.14 sec
The periods calculated using Method 3 are shorter than the period calculated using Method 1. A shorter building period produces higher pseudo lateral forces due to the higher C1 coefficient calculated below. Therefore, the periods calculated using Method 3 are used.

<u>Determination of C_1 factor:</u>

$C_1 = 1.5$ for $T < 0.10$ second, $C_1 = 1.0$ for $T \geq T_0$. Linear interpolation is used for intermediate values of T.

$C_1 = 1.5$ for $T < 0.10$ seconds
$C_1 = 1.0$ for $T \geq T_0$ seconds

The building period, T, and the period associated with the transition from the constant acceleration segment of the spectrum to the constant velocity segment of the spectrum, T_0, are needed to calculate C_1 (see FEMA 273 Section 2.615 for discussion of T_0).

Determination of T_0 (per FEMA 273 Section 2.6.1.5)

$T_0 = (S_{X1}B_S) / (S_{XS}B_1)$ (FEMA 273 Eq. 2-10)

For determination of T_0, use S_{D1} (= 0.42) and S_{DS} (= 0.82) determined for the building evaluation for S_{X1} and S_{XS}, respectively.

From FEMA 273 Table 2-15, B_S and B_1 = 1.0 for 5% damping

T_0 = (0.42 x 1.0) / (0.82 x 1.0) = 0.51 seconds

Transverse Direction: Linearly interpolate to obtain $C_1 = 1.5 + \frac{(0.19-0.10)}{(0.51-0.10)}(1.0-1.5) = 1.39$

Longitudinal Direction: Linearly interpolate to obtain $C_1 = 1.5 + \frac{(0.14-0.10)}{(0.51-0.10)}(1.0-1.5) = 1.45$

Determination of C_2 factor: (from FEMA 273 Table 3-1)

Footnote 1 of FEMA 273 Table 3-1 states that structures in which more than 30% of the story shear at any level is resisted by elements whose strength and stiffness may deteriorate during the design earthquake be classified as framing type 1. This structure resists loads through a combination of the original unreinforced hollow clay tile and the new shotcrete. Both of these materials are subject to strength and stiffness degradation, and are therefore classified as framing type 1.

Linearly interpolate for the Safe Egress Performance Level between the Life Safety and Immediate Occupancy Performance Levels to obtain:

Transverse: $C_2 = 1.16$
Longitudinal: $C_2 = 1.18$

Determination of C_3 factor:

The C_3 coefficient is a modification factor to represent increased displacements due to dynamic P-Δ effects. The structure being evaluated has squat shear walls, which produce very small deflections. Therefore, P-Δ effects are neglected for this example.

Transverse: $C_3 = 1.0$
Longitudinal: $C_3 = 1.0$

Determination of spectral acceleration, S_a:

For periods less than T_0, $S_a = S_{DS}$ (TI 809-04 Eq. 3-13)
S_a = 0.82 for both longitudinal and transverse directions.
Determine pseudo lateral forces:

V_{trans} = (1.39)(1.16)(1.0)(0.82)(511 k) = 676 kips (3007 kN)
V_{long} = (1.46)(1.18)(1.0)(0.82)(464 k) = 655 kips (2913 kN)

- *Mathematical Modeling Assumptions (per FEMA 273 Section 3.2.2):*

- The metal deck diaphragm is modeled as a flexible diaphragm relative to the stiff shear walls. The seismic masses are assigned to shear walls based on tributary area.

- Horizontal torsion: Torsion is neglected since the building has a flexible diaphragm.

- The new 4" shotcrete walls are assumed to resist all of the shear forces. The existing 12" hollow clay tile walls are assumed to act as anchored veneer that resists no loads, either in plane or out-of-plane.

- P-Δ effects are neglected due to the squatnness of the walls.

- The new shotcrete walls are assumed to have no gravity loading other than their self-weight.

Determine seismic effects on building components, Q_E

Diaphragm forces:

Total shear force to the main theater diaphragm = $C_1C_2C_3S_aW$

Transverse direction:
Weight tributary to the main theater diaphragm: W_{trans} = 342 kips
Total shear force acting on the diaphragm: F_d = (1.39)(1.16)(1.0)(0.82)(342 kips) = 452 kips
Diaphragm span, L = 100 ft. Diaphragm depth, d = 80 ft.
Running load to diaphragm, w = F_d / L = 452 kips / 100 ft. = 4520 plf
Shear force resisted by each transverse wall line, B and G = ½ F_d = ½(452 kips) = 226 kips per wall
Maximum diaphragm shear (at the shear walls) = v_{trans} = (226 kips) / (80 ft) = 2825 plf
Moment at diaphragm midspan = $wL^2 / 8$ = (4520 plf)(100 ft.)^2 / 8 = 5650 kip ft
Chord force = M / d = 5650 kip-ft / 80 ft. = 71 kips (316 kN)

Longitudinal direction:
Weight tributary to the main theater diaphragm: W_{long} = 350 kips
Total shear force acting on the diaphragm: F_d = (1.45)(1.18)(1.0)(0.82)(350 kips) = 491 kips
Diaphragm span, L = 80 ft. Diaphragm depth, d = 100 ft.
Running load to diaphragm, w = F_d / L = 491 kips / 80 ft. = 6138 plf
Shear force resisted by each longitudinal wall line, 1 and 6 = ½ F_d = ½(491 kips) = 246 kips per wall
Maximum diaphragm shear (at the shear walls) = v_{long} = (246 kips) / (100 ft) = 2460 plf
Moment at diaphragm midspan = $wL^2 / 8$ = (6138/ plf)(80 ft.)^2 / 8 = 4910 kip ft
Chord force = M / d = 4910 kip-ft / 100 ft. = 49 kips (218 kN)

Note:
1 kip = 4.448 kN
1 plf = 14.59 N / m
1 ft = 0.305 m

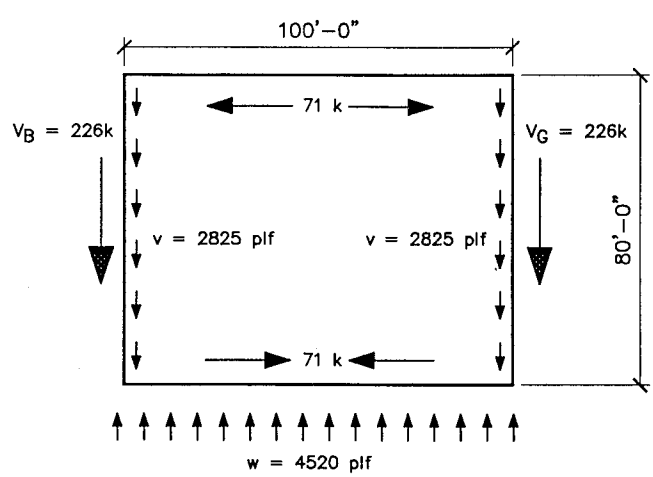

DIAPHRAGM FORCES FOR TRANSVERSE SHEAR FORCE

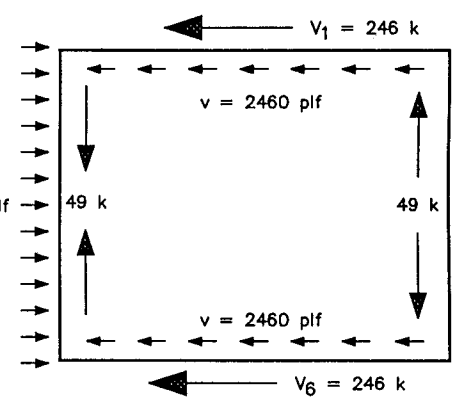

DIAPHRAGM FORCES FOR LONGITUDINAL SHEAR FORCE

Shear Wall Forces

Transverse Direction:

Wall line B:

Shear wall line B resists forces tributary to both the main theater and lobby area diaphragms, in addition to self-inertial forces. Note: A partition load of 10 psf is included since there are partitions in the lobby area.

Determine shear forces from lobby area:

Tributary weight:

	Tributary Length (ft.)	Width or Tributary Height (ft.)	% Solid	Total Area (ft.^{2})	Unit Weight (psf)	Total Weight (kips)
Roof Level						
Entrance area between gridlines A & B (for loads tributary to wall line B)						
Roofing and Framing	52	15	100.0%	780	28.5	22.2
Partition Load (default 10 psf)	52	15	100.0%	780	10.0	7.8
Walls						
Walls of the lobby area						
Wall 5A-5B (only 1/2 length)	15	9.45	95.0%	135	60.0	8.1
Wall 2A-2B (only 1/2 length)	15	9.45	95.0%	135	60.0	8.1

Total Wt. = 46.2 kips
(205kN)

Shear from lobby area = $C_1C_2C_3S_aW$ = (1.39)(1.16)(1.0)(0.82)(46.2 k) = 61 kips (271 kN)

Shear from main theater diaphragm = 226 kips (determined previously)

Self-weight of Wall line B = 54.3 kips

Shear from self-weight = $C_1C_2C_3S_aW$ = (1.39)(1.16)(1.0)(0.82)(54.3 k) = 72 kips

Total shear to Wall line B = 61 kips + 226 kips + 72 kips = 359 kips (1597 kN)

Distribute the wall shear to the individual piers based on relative rigidities:

Wall Pier	Rigidity (kips / in)	Shear to Pier (kips)	Length of Pier (ft.)	Width of Pier (in.)	Area of Pier, A_{cv} (in.^{2})	Pier Shear Stress (psi)
Pier A	1476	21	6	4	288	74
Pier B	10873	158	22	4	1056	150
Pier C	10873	158	22	4	1056	150
Pier D	1476	21	6	4	288	74

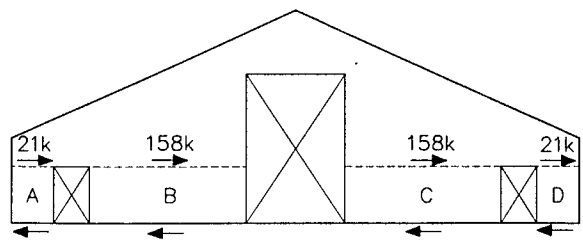

SHEAR WALL LINE B

Determine moments to piers:

Piers A and D are similar and piers B and C are similar.

M_A = (21 kips)(8 ft) / 2 = 84 kip-ft (114 kN-m)
M_B = (158 kips)(8 ft) / 2 = 632 kip-ft (857 kN-m)

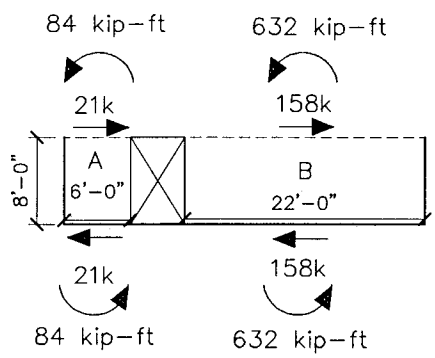

Wall line G:

Shear wall line G resists forces from the main roof diaphragm and self-inertial forces.

Shear from main theater diaphragm = 226 kips (determined previously)
Self-weight of Wall line G = 68.0 kips
Shear from self-weight = $C_1C_2C_3S_aW$ = (1.39)(1.16)(1.0)(0.82)(68.0 k) = 90 kips

Total shear to Wall line G = 226 kips + 90 = 316 kips (1406 kN)

Distribute the wall shear to the individual piers based on relative rigidities:

Wall Pier	Rigidity (kips / in)	Shear to Pier (kips)	Length of Pier (ft.)	Width of Pier (in.)	Area of Pier, A_{cv} (in.^{2})	Pier Shear Stress (psi)
Pier A	1476	16	5	4	240	65
Pier B	12869	135	25.5	4	1224	111
Pier C	10729	113	21.75	4	1044	108
Pier D	4979	52	12	4	576	91

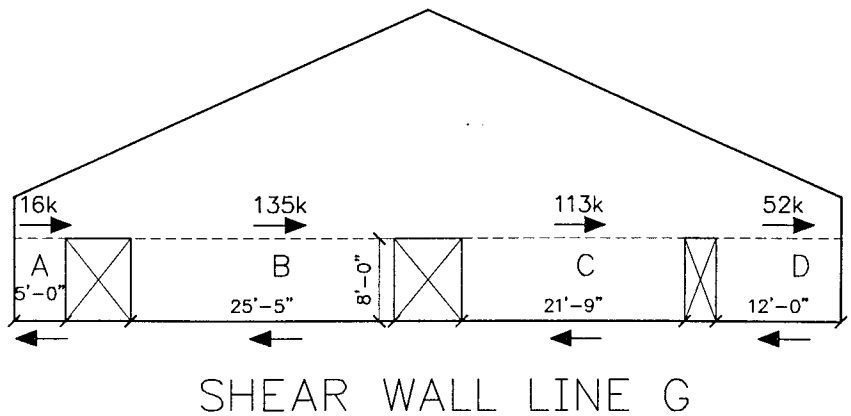

Determine moments to piers:

M_A = (16 kips)(8 ft) / 2 = 64 kip-ft (87 kN-m)
M_B = (135 kips)(8 ft) / 2 = 540 kip-ft (732 kN-m)
M_C = (113 kips)(8 ft) / 2 = 452 kip-ft (613 kN-m)
M_D = (52 kips)(8 ft) / 2 = 208 kip-ft (282 kN-m)

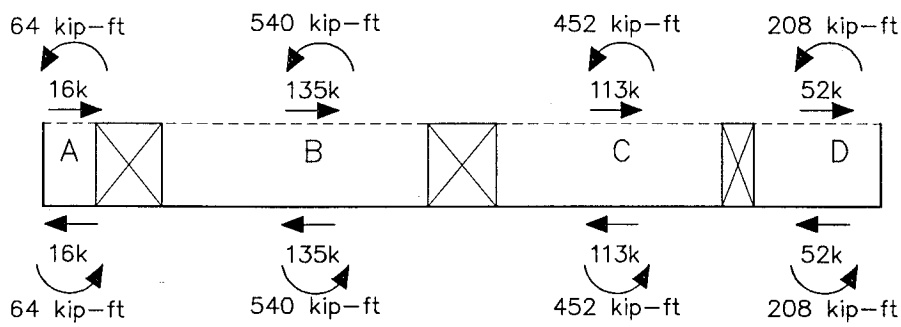

<u>Longitudinal Direction:</u>

Wall lines 1 and 6 are similar:

Shear wall lines 1 and 6 resist forces tributary to the main theater diaphragm and self-inertial forces.

Shear from main theater diaphragm = 246 kips (determined previously)

Self-weight of Wall line 1 = 57 kips

Shear from self-weight = $C_1C_2C_3S_aW$ = (1.45)(1.18)(1.0)(0.82)(49.1 k) = 80 kips

Total shear to Wall lines 1 & 6 = 246 kips + 80 kips = 326 kips (1450 kN)

Distribute the wall shear to the individual piers based on relative rigidities:

Wall Pier	Rigidity (kips / in)	Shear to Pier (kips)	Length of Pier (ft.)	Width of Pier (in.)	Area of Pier, A_{cv} (in.^{2})	Pier Shear Stress (psi)
Pier A	13718	89.5	27	4	1296	69
Pier B	36236	236.5	65	4	3120	76

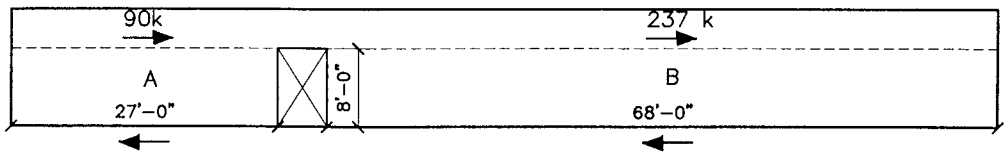

SHEAR WALL LINES 1 & 6

Determine moments to piers:

M_A = (90 kips)(8 ft) / 2 = 360 kip-ft (488 kN-m)
M_B = (237 kips)(8 ft) / 2 = 948 kip-ft (1285 kN-m)

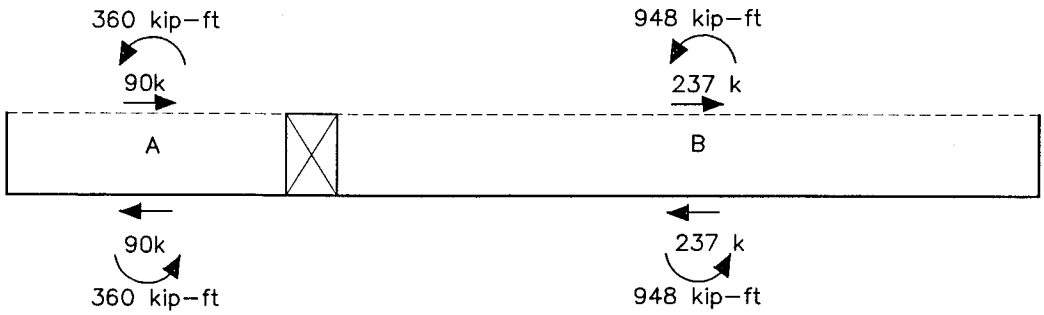

Out-of-plane wall forces

Wall anchorage:

Wall-to-diaphragm:

The walls must be anchored to the diaphragm for the larger off 400 S_{XS} pounds per foot of wall or χS_{XS} times the weight of the wall tributary to the anchor (per FEMA 273 Sec. 2.11.7)

$S_{XS} = S_{DS} = 0.82$
$\chi = 0.5$ (χ value for Safe Egress Performance Level is taken as the average of the Life Safety and Immediate Occupancy values listed in FEMA 273 Table 2-18.)

$400S_{XS} = 400(0.82) = 328$ plf
$\chi S_{XS} = (0.5)(0.82) = 0.41$
W_{trib} = (trib area)(unit weight)
trib area = ½ of average wall ht. x 1' wide strip = (21'/2)(1') = 10.5 ft.^{2}
$W_{trib} = (10.5\ ft^2)(110\ psf) = 1.155$ kips / ft. of length
$\chi S_{XS} W_{trib} = (0.41)(1.155\ klf) = 474\ plf > 328\ plf$

∴ 474 plf governs (6.92 kN / m)

Out-of-plane forces to be resisted by shotcrete:

The shotcrete walls must resist out-of-plane flexural and shear forces. The force level is determined in the same manner as the hollow clay tile-to-shotcrete anchorage forces.

Transverse walls:

For the transverse direction, the 'x' term is taken as the average wall height = 21'.

$$F_p = \frac{0.4a_p S_{XS} I_p W_p \left(1 + \frac{2x}{h}\right)}{R_p}, \quad F_p = \frac{0.4(1.0)(0.82)(1.0)(100psf)\left(1 + \frac{2(21')}{21'}\right)}{(1.5)} = 66\,psf\ (3.16\ kPa)$$

Longitudinal walls:

$$F_p = \frac{0.4a_p S_{XS} I_p W_p \left(1 + \frac{2x}{h}\right)}{R_p}, \quad F_p = \frac{0.4(1.0)(0.82)(1.0)(100psf)\left(1 + \frac{2(12')}{12'}\right)}{(1.5)} = 66\,psf\ (3.16\ kPa)$$

All of the walls are assumed to act as simply supported beams. The longitudinal walls span from the roof to the grade level (span = 12'). The transverse walls are assumed to span horizontally between the steel gravity columns (span = 15'-6").

$M = wL^2/8$
$M_{long} = (66\ psf)(12')^2 / 8 = 1.2$ kip-ft / ft of wall (5.34 kN-m / m)
$M_{trans} = (66\ psf)(15.5')^2 / 8 = 2.0$ kip-ft / ft of wall (8.90 kN-m / m)

$V = wL/2$
$V_{long} = (66\ psf)(12') / 2 = 0.4$ kips / ft (5.84 N / m)
$V_{trans} = (66\ psf)(15.5') / 2 = 0.5$ kips / ft (7.30 N / m)

Combination of load effects

- Gravity loads, Q_G: The structural components being evaluated do not resist any gravity loads other than their self-weight. Therefore, the gravity load effects are neglected.

  $Q_G = 1.2\ Q_D + 0.5Q_L + 0.2\ Q_S = 0$ (Eq. 7-1)
  $Q_G = 0.9\ Q_D = 0$ (FEMA 273 Eq. 3-3)

b. Acceptance criteria

Deformation-controlled actions

The deformation-controlled actions that need to be checked include in-plane wall flexure and shear, out-of-plane wall flexure and diaphragm shear.

The design actions Q_{UD} are calculated according to $Q_{UD} = Q_G \pm Q_E$ (FEMA 273 Eq. 3-14)
Gravity effects are negligible so the design actions reduce to Q_E only.

The acceptance criteria for deformation-controlled components is:
$mQ_{CE} \geq Q_{UD}$ (Eq. 7-2)

Diaphragm shear

The diaphragms can be either deformation-controlled for panel buckling, or force-controlled for connection capacity. Therefore, they are checked for both conditions.

The diaphragm connection along wall line B must transmit the transverse diaphragm forces from both the main theater and entrance lobby. The diaphragm shear from the main theater was previously determined to be 2825 plf (see diaphragm forces section). The transverse shear force from the lobby diaphragm that is transmitted to wall line B was previously determined to be 61 kips (see shear wall forces section). This force from the lobby area is equal to a shear of 61 kips / 80 ' = 763 plf. The total shear that must be transmitted across the roof deck-to-wall line B connection = 2825 plf + 763 plf = 3588 plf (52.4 kN / m)

The allowable shear listed in the manufacture's catalog for this deck is 2420 plf (16 gage metal decking, side-seam welds 1-1/2" long @ 24", span = 5', with 7 welds per support). This value is multiplied by 1.5 to bring it to ultimate strength (FEMA 273 Sec. 5.8.1.3 states that allowable shear values may be multiplied by 2.0 to bring them to ultimate strength. However, the catalog values already have the 1/3 increase for allowable stress included. Therefore, the allowable stresses are multiplied by (2.0)(3/4) = 1.5.)

Diaphragm strength, Q_{CE} = 2420 plf * 1.5 = 3630 plf (53.0 kN/m)
(Note: The expected diaphragm strength does not have the 1.25 factor applied. The deformation-controlled failure of a diaphragm is due to buckling of the deck. Buckling will not allow for much strain hardening, and therefore, the 1.25 factor is not used.)

Q_{UD} = 3588 plf (52.4 kN / m)

The m-factor for bare metal deck diaphragms for the Safe Egress Performance Level from TI 809-04 paragraph 7-7.e.(4)(b)2.ii is 1.5.

mQ_{CE} = 1.5(3630 plf) = 5445 plf (79.4 kN / m) > Q_{UD} = 3588 plf (52.4 kN / m), OK.

Shear Walls
It is assumed that the seismic forces are resisted entirely by the new shotcrete.

The new shotcrete is 4" (102 mm) thick and is reinforced with #4 bars at 18" (457 mm) in both the horizontal and vertical directions. This is the minimum steel allowed based on ACI 318 Section 21.6.2.1.

Shear strength of wall piers

Footnote 1 of Table 7-3 in TI809-04 states that for shear wall segments to be considered as deformation-controlled components the maximum shear stress must be $\leq 6\sqrt{f_c'} = 6\sqrt{3000\,\text{psi}} = 329\,\text{psi}$ (2267 kPa) and the axial load must be $\leq 0.15A_g f_c'$. The highest shear stress in the shotcrete piers is equal to 150 psi (1034 kPa) < 329 psi (2267 kPa) and axial loads are negligible. Therefore, the shear wall segments are deformation-controlled components.

The nominal shear strength V_n of structural wall segments is determined by:

$$V_n = A_{cv}\left(2\sqrt{f_c'} + \rho_n f_y\right) \qquad \text{(ACI 318 Eq. 21.6.5.2)}$$

The capacity of deformation-controlled components is based on the component's expected strength. For all shear strength calculations, 1.0 times the specified reinforcement yield strength should be used to determine the nominal strength of the member(per FEMA 273 Sec. 6.8.2.3). The nominal shear strength of the walls is used to check acceptance rather than the expected strength to be conservative.

Area of #4 bar = 0.20 in.^{2}
$\rho_n = A_{st}$ / (thickness)(spacing) = (0.20 in.^{2}) / (4")(18") = 0.0028
The nominal shear strength =

$$V_n = A_{cv}\left(2\sqrt{f_c'} + \rho_n f_y\right) = A_{cv}\left(2\sqrt{3000\,\text{psi}} + 0.0028(60000\,\text{psi})\right) = A_{cv}(278\,\text{psi})$$

The m-factor from Table 7-3 of TI 809-04 for shear wall segments is equal to 2.0.

$mQ_{CE} = mV_n = (2.0)(A_{cv})(278\text{ psi}) = A_n\,(556\text{ psi}) = A_n\,(3831\text{ kPa})$
Q_{UD} = 150 psi (1034 kPa) (highest shear stress in any of the shotcrete piers occurs in piers B and C along wall line B)

556 psi (3831 kPa) > 150 psi (1034 kPa), OK

Moment strength of wall piers

The expected moment strength for the wall piers is conservatively estimated to be equal to the strength of the steel at the pier boundaries times the moment arm between the steels at the boundaries. The trim steel at each pier edge consists of two #4 bars. The moment arm between the trim steel is estimated to be equal to the length of the pier minus 1'. For moment calculations, the yield strength of the flexural reinforcement is taken as 125% of the specified yield strength to account for material overstrength and strain hardening (per FEMA 273 Sec. 6.8.2.3).

Expected reinforcing steel strength = $f_{ye} = 1.25f_y = 1.25(60\text{ ksi}) = 75$ ksi
Moment lever arm = L' = Length of pier –1'
Expected moment strength = $Q_{CE} = A_{st}f_{ye}L'$
Area of reinforcing steel = A_{st} = 2 - #4 bars = 0.40 in.^{2}

Wall line B:

Wall Pier	Shear to Pier (kips)	Moment on Pier Q_{UD} (kip-ft)	Moment Arm of Pier (ft.)	Expected Moment Strength of Pier Q_{CE} (kip-ft)	m-factor	Q_{UD} / mQ_{CE}	Acceptance
Pier A	21	84	5	150	2	0.3	OK
Pier B	158	632	21	630	2	0.5	OK
Pier C	158	632	21	630	2	0.5	OK
Pier D	21	84	5	150	2	0.3	OK

Wall line G:

Wall Pier	Shear to Pier (kips)	Moment on Pier Q_{UD} (kip-ft)	Moment Arm of Pier (ft.)	Expected Moment Strength of Pier Q_{CE} (kip-ft)	m-factor	Q_{UD} / mQ_{CE}	Acceptance
Pier A	16	64	4	120	2	0.3	OK
Pier B	135	540	24.5	735	2	0.4	OK
Pier C	113	452	20.75	623	2	0.4	OK
Pier D	52	208	11	330	2	0.3	OK

Wall lines 1 & 6 (these walls are similar):

Wall Pier	Shear to Pier (kips)	Moment on Pier Q_{UD} (kip-ft)	Moment Arm of Pier (ft.)	Expected Moment Strength of Pier Q_{CE} (kip-ft)	m-factor	Q_{UD} / mQ_{CE}	Acceptance
Pier A	90	360	26	780	2	0.2	OK
Pier B	237	948	64	1920	2	0.2	OK

All of the piers have adequate moment strength.

Out-of-plane wall flexural forces:

The flexural demand on the walls = 2.0 kip-ft (transverse walls are more critical than longitudinal walls).
Q_{UD} = 2.0 kip-ft (2.71 kN-m)

Determine flexural strength of the walls:

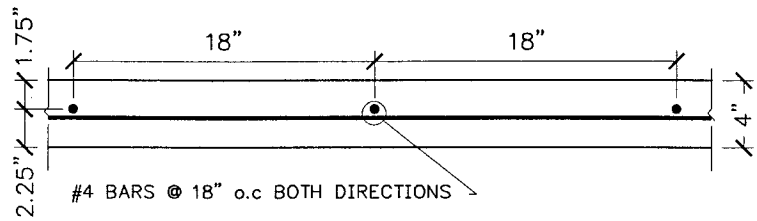

CROSS–SECTION OF SHOTCRETE WALL

Flexural strength calculations use the expected reinforcement strength, $f_{ye} = 1.25\ f_y = 1.25(60\ \text{ksi}) = 75$ ksi
Distance to tension steel, d = 1.75"
Area of steel in a one foot wide strip, $A_s = 0.20\ \text{in.}^2 / (18" / 12) = 0.13\ \text{in.}^2$ / foot

$$a = \frac{A_s f_{ye}}{0.85 f_c' b} = \frac{(0.13\text{in}^2)(75\text{ksi})}{0.85(3\text{ksi})(12")} = 0.32"$$

$$M_{CE} = A_s f_{ye}\left(d - \frac{a}{2}\right) = \left(0.13\,\text{in}^2\right)(75\,\text{ksi})\left(1.75" - \frac{0.32"}{2}\right) = 15.5\,\text{kipin} = 1.3\,\text{kip} - \text{ft}\ (1.76\ \text{kN-m})$$

$Q_{CE} = M_n$ = 1.3 kip-ft

It is assumed that the walls are flexure-controlled for out-of-plane forces. The m-factor from TI 809-04 Table 7-2 = 2.3.

mQ_{CE} = (2.3)(1.3 kft) = 3.0 kip-ft (4068 kN-m) > Q_{UD} = 2.0 kip-ft (2.71 kN-m), OK

Force-controlled actions

The force-controlled actions that need to be checked include diaphragm shear (strength of connections), diaphragm chord forces, connections of the diaphragm to new shotcrete walls, out-of-plane wall shear strength and anchorage, shear transfer to strip footings, and shear capacity of the existing strip footings.

The design actions Q_{UF} are calculated according to $Q_{UF} = Q_G \pm \frac{Q_E}{C_1 C_2 C_3}$ (FEMA 273 Eq. 3-15)

Gravity effects are negligible so the design actions reduce to $Q_{UF} = \frac{Q_E}{C_1 C_2 C_3}$ only.

For transverse seismic forces, $C_1C_2C_3$ = (1.39)(1.16)(1.0) = 1.61
For longitudinal seismic forces, $C_1C_2C_3$ = (1.45)(1.18)(1.0) = 1.71

Therefore, the force-controlled demands are:

Transverse: $Q_{UF} = Q_E / 1.61$
Longitudinal: $Q_{UF} = Q_E / 1.71$

The acceptance criteria for force-controlled components is:
$Q_{CN} \geq Q_{UF}$ (Eq. 7-3)

Diaphragm shear

The connection capacity of the metal deck diaphragm is considered a force-controlled action.

The governing shear is the total shear that must be transmitted across the roof deck-to-wall line B connection determined earlier = 3588 plf (52.4 kN / m) for seismic forces in the transverse direction.

$Q_{UF} = Q_E / 1.61 = 3588$ plf / 1.61 = 2229 plf (32.5 kN / m)
Diaphragm strength, $Q_{CN} = Q_{CE} = 3630$ plf (53.0 kN / m) (determined previously)

$Q_{CN} = 3630$ plf (53.0 kN / m) > $Q_{UF} = 2229$ plf (32.5 kN / m), OK

Diaphragm chord forces

The diaphragm chord elements are the edge beams along the wall lines and the reinforcing at the top of the new shotcrete. The 2-#5 reinforcing bars in the top of the shotcrete are made continuous by passing the bars through holes drilled in the interfering columns. The chord members are checked for the reinforcing only, neglecting the capacity of the edge beam, to be very conservative.

$Q_{CN} = Af_{ye}$, where $f_{ye} = 1.25f_y = 1.25(60 \text{ ksi}) = 75$ ksi
$Q_{CN} = (0.61 \text{ in.}^2)(75 \text{ ksi}) = 46$ kips (205 kN)

Maximum Chord force, $Q_E = 71$ k (for seismic forces in the transverse direction)

$Q_{UF} = Q_E / 1.61 = 71 \text{ k} / 1.61 = 44$ k (196 kN)

$Q_{CN} = 46$ kips (205 kN) > $Q_{UF} = 44$ k (196 kN), OK

Connection of diaphragm to shear walls for in-plane shear transfer

The deck is welded to 3/8" (9.5 mm) bent plate (longitudinal walls) or directly to the edge beam (transverse walls) which are anchored to the wall with ¾" (19 mm) studs at 4' (1.22 m) on center. The welding of the decking to the plate and the edge beam is per the manufacture's specs. At the longitudinal walls, the bent plate is welded to the beams with 2" (51 mm) fillet welds at every 2' (61 cm) on both sides of the plate.

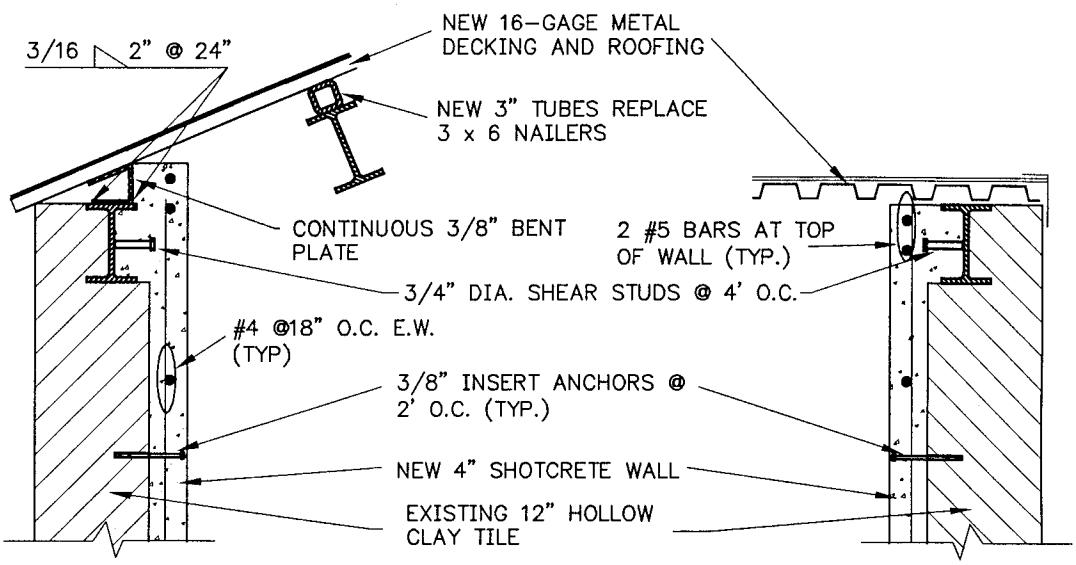

TYPICAL LONGITUDINAL METAL DECKING-TO-WALL CONNECTION

TYPICAL TRANSVERSE METAL DECKING-TO-WALL CONNECTION

1 in = 25.4 mm
1 ft = 0.305 m

Check of shear stud capacity:

The maximum shear force transferred to the shotcrete walls occurs at wall line B. This shear was determined to be 2229 plf in the previous step (scaled to be force-controlled).

Shear demand, Q_{UF} = 2229 plf (32.5 kN / m)

Q_n for a ¾" headed stud = 17.7 kips / stud (78.7 kN) (AISC LRFD Table 5-1)

Studs are place at every 4'

$Q_{CN} = Q_n$ / 4' = 17.7 kips / 4' = 4.3 kips / ft (62.8 kN / m)
Q_{CN} = 4.3 kips / ft (62.8 kN / m) > Q_{UF} = 2229 plf (32.5 kN / m), OK

Check of intermittent welds of plate to beam at longitudinal walls (use Q_{UF} = 2229 plf (32.5 kN / m) to be conservative):

Strength of weld = 0.60E70xx = 0.60(70 ksi) = 42 ksi
Weld size = 0.707(3/16") =0.133"
Length of each weld = 2"
Q_n = (42 ksi)(0.133")(2") = 11.2 kips / weld
2 welds (one on each side); Q_n = (2)(11.2 kips) = 22.4 kips
Welds spaced at 2' O.C.;
Q_{CN} = 22.4 kips / 2' = 11.2 kips / ft (163 kN / m) > Q_{UF} = 2229 plf (32.5 kN / m), OK

Connection of diaphragm to shear walls for out-of-plane bracing

The walls load the anchor connection in tension. The design tensile strength of an anchor bolt in concrete from FEMA 302 Section 9.2.4.1 is:

$P_s = 0.9A_bF_un$ (strength governed by steel) (FEMA 302 Eq. 9.2.4.1-1)
$P_s = 0.9(0.44\ \text{in.}^2)(60\ \text{ksi})(1\ \text{bolt}) = 24\ \text{kips / bolt}$

$\phi P_c = \phi\lambda\sqrt{f_c'}(2.8A_s)n$ (strength governed by concrete failure) (FEMA 302 Eq. 9.2.4.1-2)

For this document $\phi = 1.0$
$A_s = \pi l_e^2 = \pi(3")^2 = 28.3\ \text{in.}^2$
$\phi P_c = (1.0)(0.85)\sqrt{3000\,\text{psi}}\left(2.8(28.3\text{in.}^2)\right)(1\,\text{bolt}) = 3.7\text{kips / bolt}$ - governs
Q_{CN} = (3.7 kips / bolt) / 4 ft. = 925 plf (13.5 kN / m) > Q_{UF} = 474 plf (6.92 kN / m), OK

Out-of-plane wall shear strength

$Q_{UF} = V_{trans}$ = 0.5 kips / ft (7.3 kN / m)

The shear strength of the wall is conservatively taken to be $2\sqrt{f_c'} = 2\sqrt{3000} = 110\text{psi}$
Q_{CN} = (110 psi)(d)(b) = (110 psi)(1.75")(12" / ft) = 2.3 kips / ft (33.6 kN / m)
Q_{CN} = 2.3 kips / ft (33.6 kN / m) > Q_{UF} = 0.5 kips / ft (7.3 kN / m), OK

Shear transfer from new shotcrete to existing footings

The shear force is transferred from the new shotcrete walls to the existing strip footings through 1/2" diameter injection adhesive anchors from a manufacturer's catalog. The anchors are placed at 24" on center.

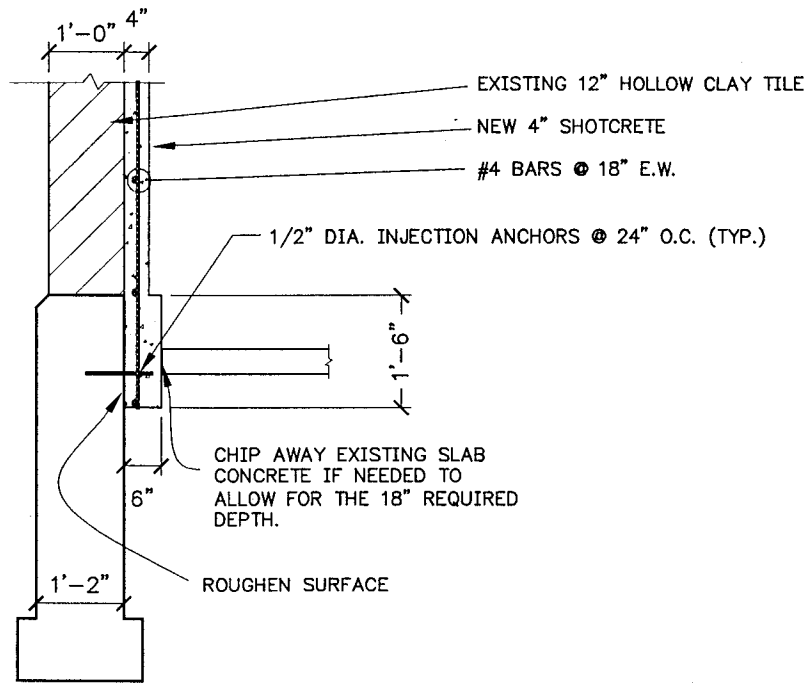

TYPICAL REHABILITATED FOOTING

Shear strength of one anchor form catalog = 8.30 kips (37 kN)
Q_{CN} = 8.3 k / 24" = 4.2 kips / ft (61.3 kN / m)

Wall Line	Deformation-Controlled Shear Demand Q_E (kips)	Scale Factor $C_1C_2C_3$	Force-Controlled Shear (kips)	Length of Wall - Openings (ft)	Shear Demand Q_{UF} (klf)
B	359	1.62	222	56	4.0
G	316	1.62	195	64	3.0
1	326	1.70	192	95	2.0
6	326	1.70	192	95	2.0

$Q_{CN} > Q_{UF}$ for all wall lines, OK

Shear in existing concrete strip footings

The shear strength of the existing footings is calculated based on the concrete contribution only while neglecting the steel reinforcement contribution. Therefore, the strength of the footings is conservatively calculated as $A_{cv} 2\sqrt{f_c'}$.
The footings are 14" wide and the concrete strength, f_c', is assumed to be 2500 psi

Footing shear strength = (Width)(Length) $2\sqrt{2500}$ = (14")(Length)(100 psi) = 1.4 k / inch = 16.8 kips / ft

Q_{CN} = 16.8 kips / ft > Q_{UF} for all wall lines, OK

7. *Prepare construction documents:*

Construction documents are not included for this design example.

8. *Quality assurance / quality control:*

QA / QC is not included for this design example.

D4. Infilled Concrete Moment Frame Building

a. Description. This building is a fire station with a high bay 31' x 40' (9.5 m x 12.2 m) vehicle storage area and an attached 20' x 31' (6.1 m x 9.5 m) two-story dormitory over an office and storage area. The vehicle area has ordinary concrete moment frames in the transverse direction. The frames are infilled with URM in the longitudinal direction and in the transverse direction at the juncture with the two-story portion. The front is open to accommodate large nonstructural door framing. The roof consist of a concrete pan joist and slab system supported by the moment frames. The second floor is also a concrete joist system supported on intermediate beams at midheight of the two moment frames at the rear of the building.

b. Performance Objective. The fire station is designated as a Seismic Use Group IIIE structure and is assigned an IO performance level.

c. Analytical procedures. It will be assumed that the structure was designed for gravity loads only ignoring the infill. The building will be subjected to a full building Tier 2 evaluation including the infill participation and the rehabilitation will be designed based on a Linear Static Procedure analysis.

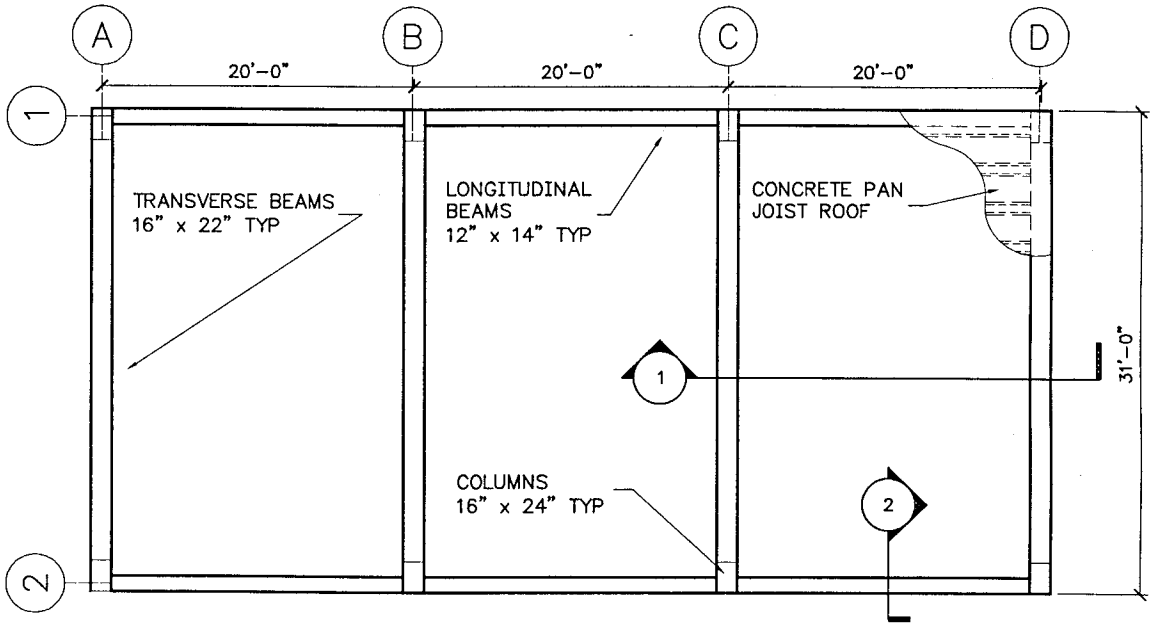

ROOF FRAMING

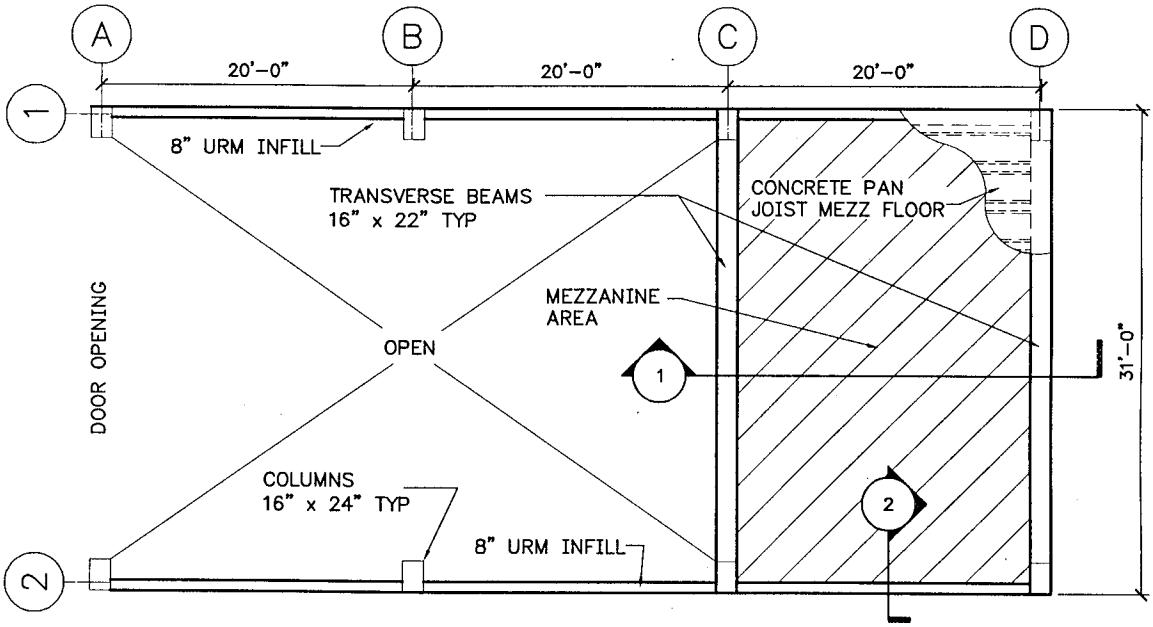

FRAMING AT MEZZANINE LEVEL

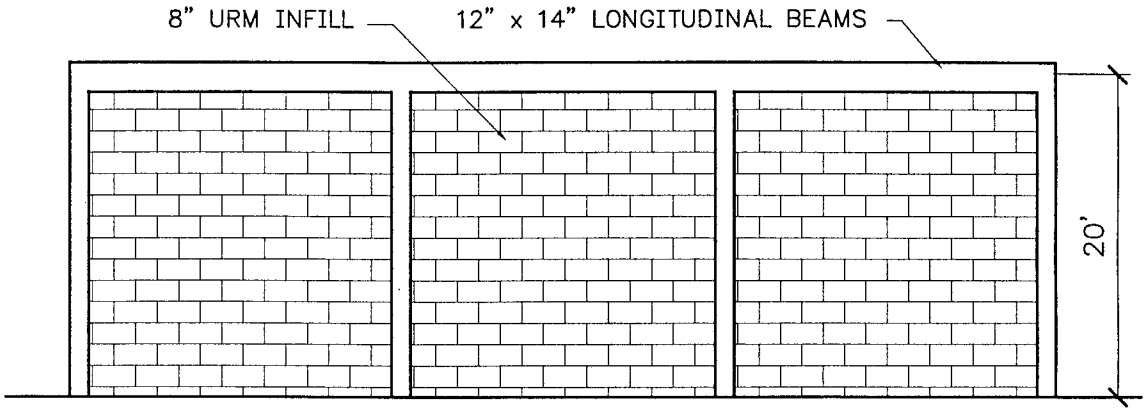

LONGITUDINAL ELEVATION

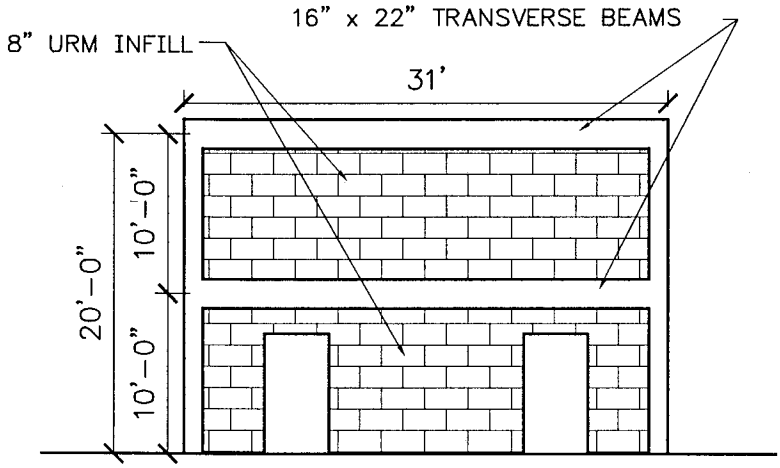

TRANSVERSE ELEVATION WALL LINE D

1 ft = 0.305 m
1 in = 25.4 mm

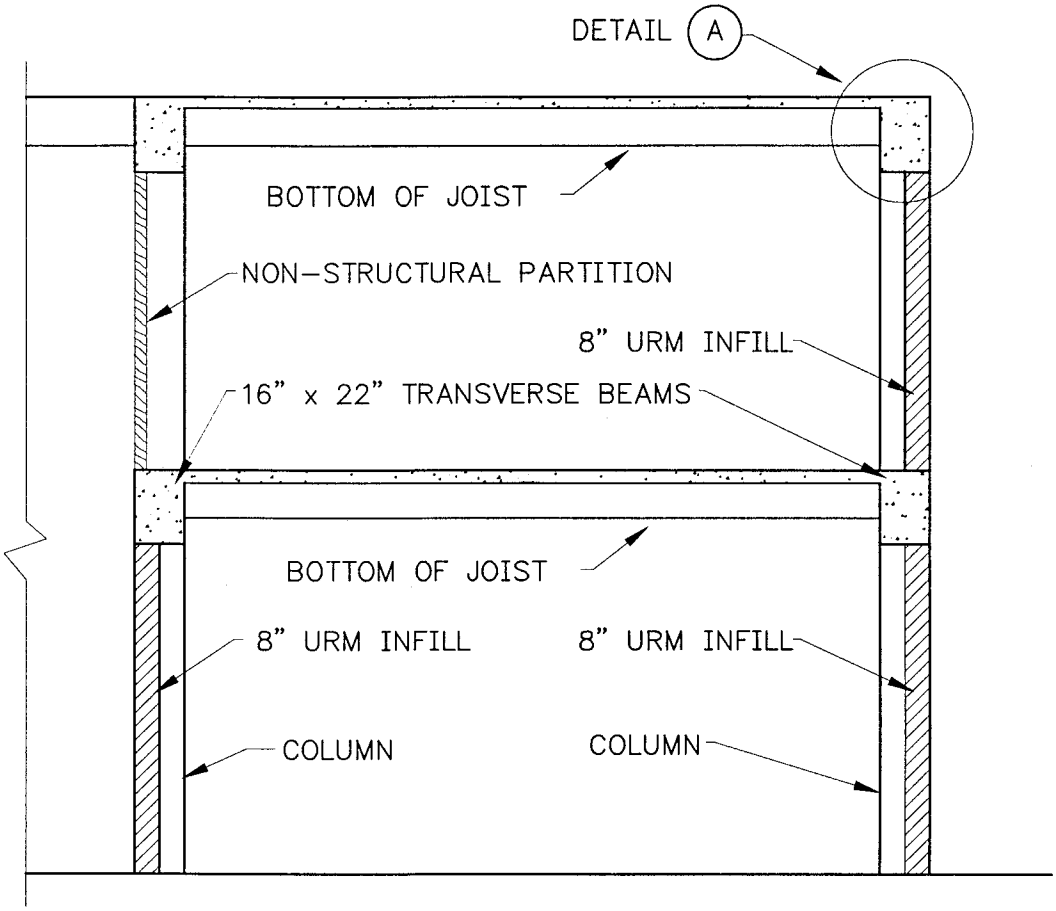

SECTION 1

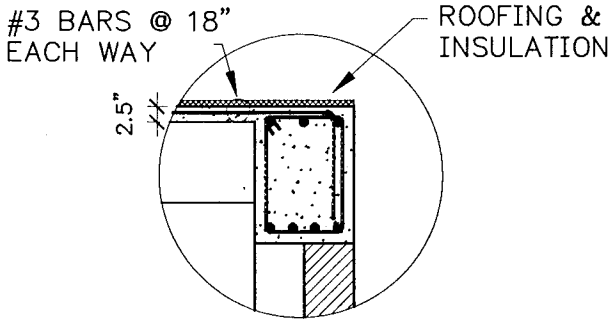

DETAIL A

1 in = 25.4 mm

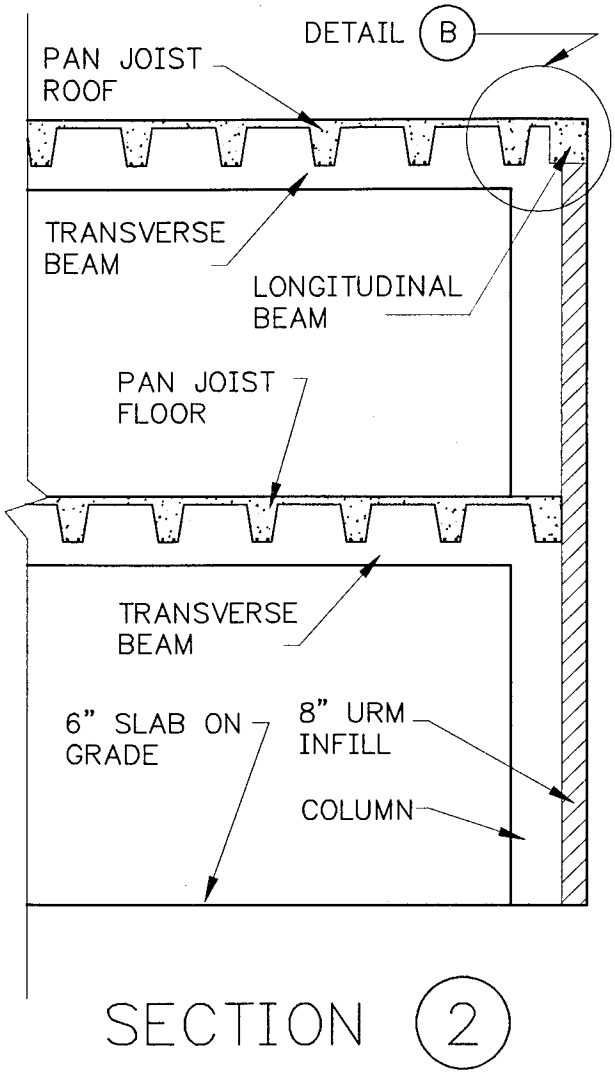
DETAIL B
PAN JOIST ROOF
TRANSVERSE BEAM
LONGITUDINAL BEAM
PAN JOIST FLOOR
TRANSVERSE BEAM
6" SLAB ON GRADE
8" URM INFILL
COLUMN
SECTION 2

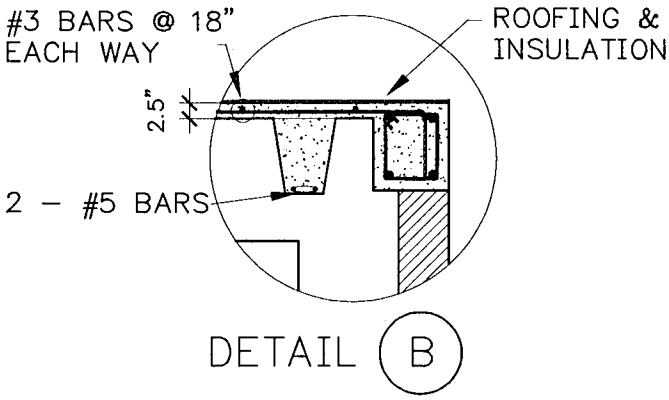
#3 BARS @ 18" EACH WAY
ROOFING & INSULATION
2.5"
2 – #5 BARS
DETAIL B

1 in = 25.4 mm

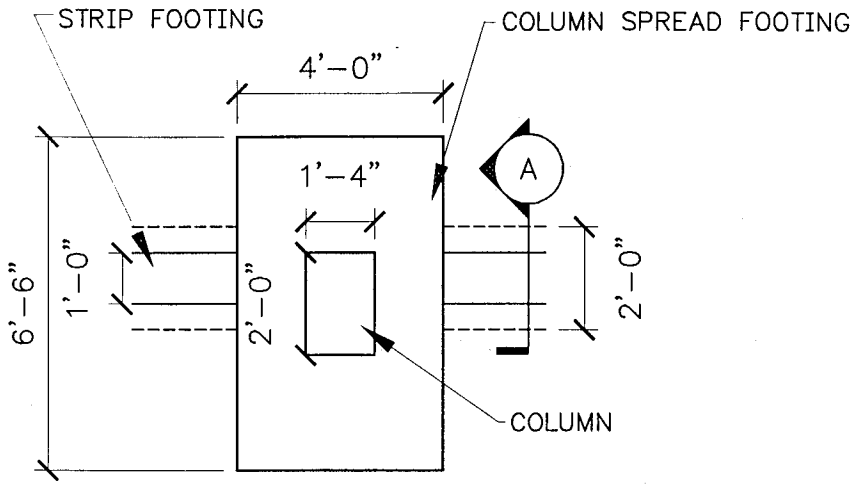

PLAN VIEW OF COLUMN FOOTING

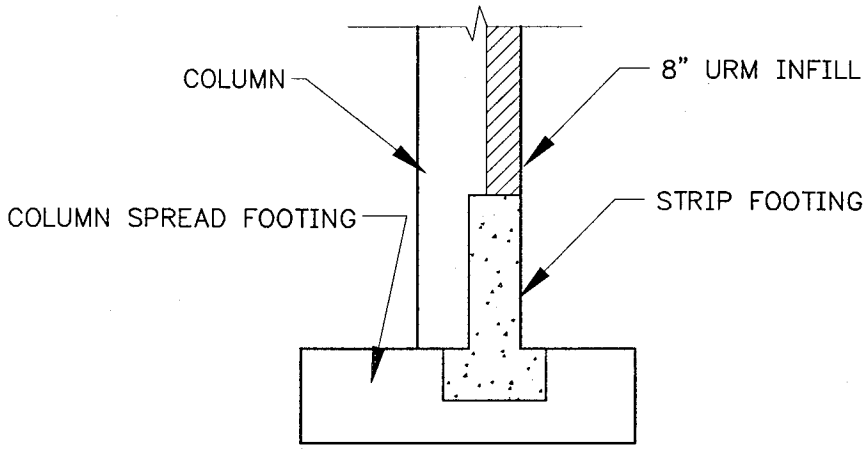

SECTION (A) THROUGH FOOTING

A. Preliminary Determinations (following steps laid out in Table 2-1)

1. Obtain building and site data:

a. Seismic Use Group. The fire station is an Essential Facility due to its occupancy. Therefore, from Table 2-2, the building falls into Seismic Use Group IIIE.

b. Structural Performance Level. This structure is to be analyzed for the Immediate Occupancy Performance Level as described in Table 2-3.

c. Applicable Ground Motions (Performance Objective). A ground motion of 2/3 MCE is prescribed for all Seismic Use Groups in Table 2-4. The spectral accelerations are determined from the MCE maps for the given location.

(1) Determine the short-period and one-second period spectral response accelerations:

$S_S = 1.00$ g	(MCE Maps)
$S_1 = 0.38$ g	(MCE Maps)

(2) Determine the site response coefficients: A geotechnical report of the building site classifies the soil as Class D (See TI 809-04 Table 3-1). The site response coefficients are determined by interpolation of Tables 3-2a and 3-2b of TI 809-04.

$F_a = 1.1$	(TI 809-04 Table 3-2a)
$F_v = 1.64$	(TI 809-04 Table 3-2b)

(3) Determine the adjusted MCE spectral response accelerations:

$S_{MS} = F_a S_S = (1.1)(1.0) = 1.1$	(TI 809-04 Eq. 3-1)
$S_{M1} = F_v S_1 = (1.64)(0.38) = 0.62$	(TI 809-04 Eq. 3-2)
$S_{MS} \leq 1.5\ F_a = 1.5(1.1) = 1.65 > 1.1$, use 1.1	(TI 809-04 Eq. 3-5)
$S_{M1} \leq 0.6\ F_v = 0.6(1.64) = 0.984 > 0.62$, use 0.62	(TI 809-04 Eq. 3-6)

(4) Determine the design spectral response accelerations:

$S_{DS} = 2/3\ S_{MS} = (2/3)(1.1) = 0.73$	(TI 809-04 Eq. 3-3)
$S_{D1} = 2/3\ S_{M1} = (2/3)(0.62) = 0.41$	(TI 809-04 Eq. 3-4)

d. Determine seismic design category:

Seismic design category: D	(Table 2-5a)
Seismic design category: D	(Table 2-5b)
Use Seismic Design Category D	

2. Screen for geologic hazards and foundations. Screening for hazards was performed in accordance with Paragraph F-3 of Appendix F in TI 809-04. It was determined that no hazards existed. Table 4-2 of this document requires that the geologic site hazard and foundation checklists contained in FEMA 310 be completed for structures assigned to Seismic Design Category D. See step C.2 for the completed checklist.

3. Evaluate geologic hazards. Not necessary.

4. Mitigate geologic hazards. Not Necessary.

B. Preliminary Structural Assessment (following steps laid out in Table 4-1)

1. Definitely needs rehabilitation without further evaluation. The structure has continuous load paths to resist lateral forces and there are no obvious signs of distress. Therefore, it is not obvious whether the building needs rehabilitation or not without an evaluation.

2. Requires evaluation. Paragraph 4-2a states that Seismic Use Group IIIE buildings will be evaluated only by a Tier 2 or Tier 3 evaluation. The building is fairly regular, with the exception of the mezzanine, and is therefore evaluated with a Tier 2 analysis.

C. Structural Screening (Tier 1) (following steps laid out in Table 4-2)

The structure is to be evaluated with a Tier 2 analysis. However, the Geologic Sited Hazard & Foundation Checklist is completed for all structures at this step.

1. Determine applicable checklists. Table 4-3 requires that the Geologic Site Hazard and Foundation checklist be completed for structures being evaluated with a Tier 2 analysis (The Basic Nonstructural and Supplemental Nonstructural checklists would also be completed at this point. However, this example does not address the nonstructural evaluation and rehabilitation.)

2. Complete applicable checklists

Geologic Site Hazards and Foundations Checklist (FEMA 310, Section 3.8)

This Geologic Site Hazards and Foundations Checklist shall be completed when required by Table 4-3 of TI 809-05. Each of the evaluation statements on this checklist shall be marked compliant (C), non-compliant (NC), or not applicable (N/A) for a Tier 1 Evaluation. Compliant statements identify issues that are acceptable according to the criteria of this Handbook, while non-compliant statements identify issues that require further investigation. Certain statements may not apply to the buildings being evaluated. For non-compliant evaluation statements, the design professional may choose to conduct further investigation using the corresponding Tier 2 evaluation procedure; the section numbers in parentheses following each evaluation statement correspond to Tier 2 evaluation procedures.

Geologic Site Hazards

The following statements shall be completed for buildings in regions of high or moderate seismicity.

(C)	NC	N/A	LIQUEFACTION: Liquefaction susceptible, saturated, loose granular soils that could jeopardize the building's seismic performance shall not exist in the foundation soils at depths within 50 feet under the building for Life Safety and Immediate Occupancy (Tier 2: Sec. 4.7.1.1).
(C)	NC	N/A	SLOPE FAILURE: The building site shall be sufficiently remote from potential earthquake-induced slope failures or rockfalls to be unaffected by such failures or shall be capable of accommodating any predicted movements without failure (Tier 2: Sec. 4.7.1.2).
(C)	NC	N/A	SURFACE FAULT RUPTURE: Surface fault rupture and surface displacement at the building site is not anticipated (Tier 2: Sec. 4.7.1.3).

Condition of Foundations

The following statement shall be completed for all Tier 1 building evaluations.

(C)	NC	N/A	FOUNDATION PERFORMANCE: There shall be no evidence of excessive foundation movement such as settlement or heave that would affect the integrity or strength of the structure (Tier 2: Sec. 4.7.2.1).

The following statement shall be completed for buildings in regions of high or moderate seismicity being evaluated to the Immediate Occupancy Performance Level.

(C) NC N/A DETERIORATION: There shall not be evidence that foundation elements have deteriorated due to corrosion, sulfate attack, material breakdown, or other reasons in a manner that would affect the integrity or strength of the structure (Tier 2: Sec. 4.7.2.2).

Capacity of Foundations

The following statement shall be completed for all Tier 1 building evaluations.

C NC (N/A) POLE FOUNDATIONS: Pole foundations shall have a minimum embedment depth of 4 ft. for Life Safety and Immediate Occupancy (Tier 2: Sec. 4.7.3.1).

The following statements shall be completed for buildings in regions of high seismicity and for buildings in regions of moderate seismicity being evaluated to the Immediate Occupancy Performance Level.

(C) NC N/A OVERTURNING: The ratio of the effective horizontal dimension, at the foundation level of the lateral-force-resisting system, to the building height (base/height) shall be greater than $0.6S_a$ (Tier 2: Sec. 4.7.3.2).
Longitudinal: $b/h = 60' / 20' = 3.0 > 0.6S_a = 0.6(0.73) = 0.44$
Transverse: $b/h = 40'/20' = 2.0 > 0.44$
Note: $S_a = S_{DS}$. *See the Tier 2 evaluation in Section F for the determination of* S_a

(C) NC N/A TIES BETWEEN FOUNDATION ELEMENTS: The foundation shall have ties adequate to resist seismic forces where footings, piles, and piers are not restrained by beams, slabs, or soils classified as Class A, B, or C (Tier 2: Sec. 4.7.3.3).

C NC (N/A) DEEP FOUNDATIONS: Piles and piers shall be capable of transferring the lateral forces between the structure and the soil. This statement shall apply to the Immediate Occupancy Performance Level only (Tier 2: Sec. 4.7.3.4).

(C) NC N/A SLOPING SITES: The grade difference from one side of the building to another shall not exceed one-half the story height at the location of embedment. This statement shall apply to the Immediate Occupancy Performance Level only (Tier 2: Sec. 4.7.3.5).

3. Evaluate screening results. There are no 'Noncompliant' statements from the Geologic Hazards checklist. This structure is designated as a Seismic Use Group IIIE structure and may now be evaluated by a Tier 2 analysis.

D. Preliminary Nonstructural Assessment (from Table 4-4)

Nonstructural assessment is not in the scope of this example.

E. Nonstructural Screening (Tier 1) (from Table 4-5)

Nonstructural assessment is not in the scope of this example.

F. Structural Evaluation (Tier 2) (following steps laid out in Table 5-1)

1. Select appropriate analytical procedure. Based on the guidance of paragraph 5-2 of TI 809-04 the building shall be analyzed by the Linear Static Procedure (LSP).

2. Determine applicable ground motion. The ground motion was determined in Section A to be:

$S_{DS} = 0.73$ $S_{D1} = 0.41$

3. Perform structural analysis. A mathematical model of the building is developed in accordance with FEMA 310 Sections. 4.2.2 and 4.2.3: The building is analyzed using the LSP procedure outlined in Section 4.2.2.1 of FEMA 310. A three-dimensional model is used to capture the torsional effects due to the rigid diaphragm action.

a. Develop a mathematical building model in accordance with Section 4.2.3 of FEMA 310

- *Horizontal torsion:* The total torsional moment at a given floor level is equal to the eccentricity between the center of mass and the center of rigidity and an accidental torsion produced by horizontal offset in the center of mass equal to 5% of the horizontal dimension at the given floor level. The actual torsion is captured directly by the three-dimensional model. The accidental torsion is captured by applying a moment equal to the product of the shear at a level times the 5% offset to the diaphragms (Note: the accidental torsion is calculated at both the roof and mezzanine levels by multiplying the tributary weight times 5% of the dimension of the roof or mezzanine.)

- *Primary and secondary components:* All of the columns, infills, beams and concrete slab components are classified as primary components. The concrete moment frames are assumed to resist all of the gravity loads in addition to a portion of the lateral loads. The masonry infill panels are assumed to resist lateral loads only.

- *Diaphragms:* The roof and mezzanine level diaphragms are assumed to be rigid. Therefore, the vertical resisting elements resist lateral forces based on their relative rigidities.

- *Multidirectional excitation effects:* The building is torsionally irregular due to the high stiffness at the east end of the building. Therefore, multidirectional excitation is evaluated by applying 100% of the seismic force in one horizontal direction plus 30% of the seismic forces in the perpendicular horizontal direction.

- *Vertical Acceleration:* The effects of vertical excitation are negligible.

b. Determine the pseudo lateral forces in accordance with FEMA 310 Sec. 4.2.2.1.1:

The pseudo lateral force applied in the LSP is calculated in accordance with FEMA 310 Section 3.5.2.1. The building is assumed to behave as a URM building due to the high stiffness of the infill panels compared to the frames. Although the structure has two stories in the mezzanine level area, the majority of the building has only one story. Therefore, for determination of the pseudo lateral force, assume the structure is one story. This produces a more conservative pseudo lateral force due to the higher 'C' factor for a one story structure.

$V = CS_aW$ (FEMA 310 Eq. 3-1)
$C = 1.4$ (C3, Concrete frames with masonry infill and stiff diaphragms) (FEMA 310 Table 3-4)
$S_a = S_{D1} / T$, but S_a need not exceed S_{DS}; (FEMA 310 Eq. 3-4)
$T = C_t h_n^{3/4} = 0.020(20 \text{ ft.})^{3/4} = 0.19$ sec. (FEMA 310 Eq. 3-7)
$S_{DS} = 0.73$, $S_{D1} = 0.41$ (determined previously)
$S_a = 0.41 / 0.19 = 2.16 > 0.73$, use $S_a = 0.73$

W = Total dead load and 10 psf partition load (assume snow load = 0.0 psf)

(Calculations of seismic weights not shown)

Weight tributary to the roof level diaphragm = 299 kips (1330 kN)
Weight tributary to the mezzanine level diaphragm = 78 kips (346 kN)
Total seismic weight = (299 kips + 78 kips) = 377 kips (1677 kN)

The pseudo lateral forces are the same in both the transverse and longitudinal directions.

V = (1.4)(0.73)(377 kips) = 385 kips (1712 kN)

c. Distribute the lateral forces vertically in accordance with FEMA 310 Sec. 4.2.2.1.2: The lateral force is distributed to the roof and mezzanine levels assuming that the building acts as a one-story structure. The pseudo lateral force is distributed to the roof and mezzanine based on tributary mass.

Level	w_x (kips)	CS_a	F_x (kips)	F_x (kN)
Roof	299	1.022	305	1357
Mezzanine	78	1.022	80	355
		$\Sigma =$	385	1712

d. Determine the component forces and displacements using linear, elastic analysis methods.

The actions due to earthquake forces, Q_E, are determined first:

The structure is analyzed using RISA 3D software with the following assumptions:

- The roof and mezzanine diaphragms are assumed to be rigid.

- Per FEMA 273 Table 6-4, the effective stiffness of the concrete moment frame members for flexural rigidity = 0.5EI for the beams and 0.7EI for the columns
  $E = 57\sqrt{f_c'} = 57\sqrt{3000\,\text{psi}} = 3122$ ksi for 3000 psi concrete
  $I_{\text{transverse beams}} = 1/12(14")(22")^3 = 12423 \text{ in.}^4$, $0.5I = 0.5(12423 \text{ in.}^4) = 6212 \text{ in.}^4$
  $I_{\text{longitudinal beams}} = 1/12(12")(14")^3 = 2744 \text{ in.}^4$, $0.5I = 0.5(2744 \text{ in.}^4) = 1372 \text{ in.}^4$
  $I_{\text{columns}} = 1/12(14 \text{ in.})(14 \text{ in.})^3 = 3201 \text{ in.}^4$, $0.7I = 0.7(3201 \text{in.}^4) = 2241 \text{ in.}^4$

- Mechanical Properties of Masonry:
  The mechanical properties of the masonry infill are taken as the default values given in FEMA 273 Section 7.5

  Compressive Strength: $f_{me} = 900$ psi (FEMA 273 Sec. 7.3.2.1)
  $f_{me}' = 1.25f_{me} = 1.25(900 \text{ psi}) = 1125$ psi (expected strength)

Elastic Modulus:	$E_{me} = 550\ f_{me}' = 550(1125\ \text{psi}) = 619\ \text{ksi}$	(FEMA 273 Sec. 7.3.2.2)
Tensile Strength:	$f_{te} = 20\ \text{psi}$ $f_{te}' = 1.25 f_{te} = 1.25(20\ \text{psi}) = 25\ \text{psi}$	(FEMA 273 Sec. 7.3.2.3) (expected strength)
Shear Strength:	$v_{me} = 27\ \text{psi}$ $v_{me}' = 1.25 v_{me} = 1.25(27\ \text{psi}) = 33.8\ \text{psi}$	(FEMA 273 Sec. 7.3.2.4) (expected strength)
URM Panel Thickness:	t_{inf} = equivalent solid thickness = 3.0 in (TM 5-809-3 Table 5-2)	

- Compression Struts: The infill panels along the exterior walls and the mezzanine wall on grid line C are modeled as compression struts following the procedure outlined in FEMA 273 Section 7.5.2

The elastic in-plane stiffness of a solid unreinforced masonry infill panel is represented with an equivalent diagonal compression strut of width 'a'. The equivalent strut has the same thickness and modulus of elasticity as the infill panel it represents.

$$a = 0.175(\lambda_1 h_{col})^{-0.4} r_{inf}$$ (FEMA 273 Eq. 7-14)

$$\lambda_1 = \left[\frac{E_{me} t_{inf} \sin 2\theta}{4 E_{fe} I_{col} h_{inf}}\right]^{1/4}$$

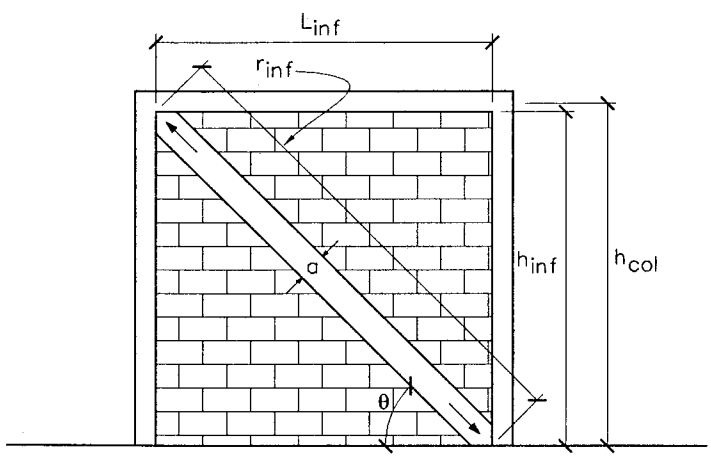

COMPRESSION STRUT TERM DEFINITIONS

Transverse wall line D:

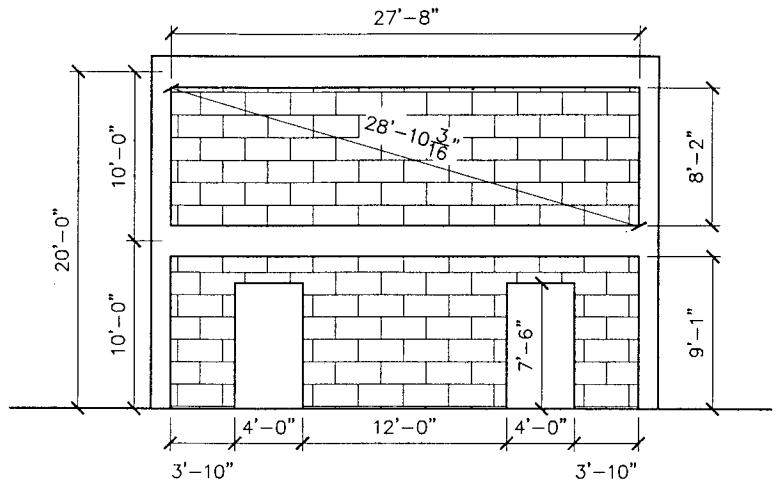

WALL LINE D

The bottom portion of the wall below the mezzanine contains openings. The equations above are applicable only for the case where the infill is solid with no openings. FEMA 273 suggests the use of a finite element program such as FEM/I to determine the equivalent strut properties for the case of a wall with openings. This can be very time consuming and may lead to inconsistent results when compared to the value predicted from the above equations. For this example, a simpler method is used. The compression strut stiffness of the complete infill is taken as the value computed from the above equations. The compression strut stiffness of the bottom infill portion with openings is then taken as a fraction of the solid infill section. The ratio is taken as the ratio of stiffness of the walls when considered as flexural-shear wall panel elements.

The flexural-shear stiffness of the walls is calculated assuming that they act as fixed-fixed pier elements.

The deflection of a fixed-fixed wall pier is calculated as:

$\Delta_f = \frac{Ph^3}{12EI} + \frac{1.2Ph}{AG}$, and the wall pier rigidity or stiffness is taken as $1/\Delta_f$

where
h = height of wall pier
E = Elastic modulus of masonry
I = Inertia of wall cross-section (Note: 0.5 I is used to model the wall as a cracked-section)
A = Cross-sectional area of wall pier
G = Shear modulus, = 0.4E for concrete and masonry

Determine flexural-shear stiffness of top portion of wall:

$$\Delta_f(h_w, l_w, t_w) := \frac{(P \cdot h_w^3)}{12 \cdot E_m \cdot I(l_w, t_w)} + \frac{(1.2 \cdot P \cdot h_w)}{A(l_w, t_w) \cdot E_v}$$

Deflection of Solid Wall $\Delta_{solid} := \Delta_f(98 \cdot in, 27.67 \cdot ft, 2.5 \cdot in)$ $\Delta_{solid} = 0.00061 \cdot in$

$R_{wall} := \frac{1 \cdot kip}{\Delta_{solid}}$ $R_{wall} = 1651 \cdot \frac{kip}{in}$

Flexural-shear stiffness of top wall portion = 1651 kips / in (2891 kN / cm)

Determine flexural-shear stiffness of bottom portion of wall:

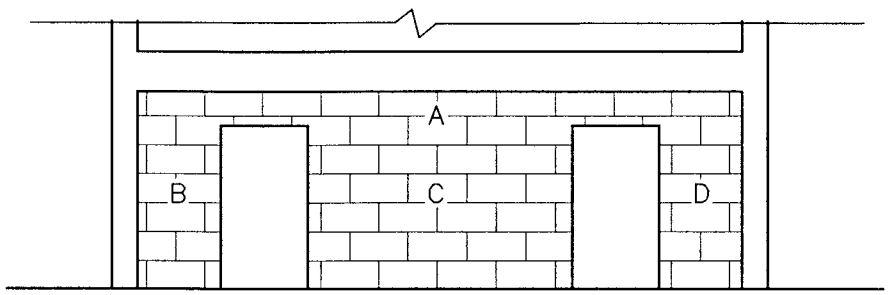

Deflection of Solid Wall $\Delta_{solid} := \Delta_f(109 \cdot in, 27.67 \cdot ft, 2.5 \cdot in)$ $\Delta_{solid} = 0.00068 \cdot in$

Subract Bottom Strip $\Delta_{strip} := \Delta_f(90 \cdot in, 27.67 \cdot ft, 2.5 \cdot in)$ $\Delta_{strip} = 0.00055 \cdot in$

$\Delta_A := \Delta_{solid} - \Delta_{strip}$ $\Delta_A = 0.00013 \cdot in$

Add Back in Piers B, C & D $\Delta_B := \Delta_f(90 \cdot in, 46 \cdot in, 2.5 \cdot in)$ $\Delta_B = 0.01348 \cdot in$

$\Delta_C := \Delta_f(90 \cdot in, 12 \cdot ft, 2.5 \cdot in)$ $\Delta_C = 0.00153 \cdot in$

$\Delta_D := \Delta_f(90 \cdot in, 46 \cdot in, 2.5 \cdot in)$ $\Delta_D = 0.01348 \cdot in$

$R_{BCD} := \frac{1}{\Delta_B} + \frac{1}{\Delta_C} + \frac{1}{\Delta_D}$ $R_{BCD} = 803 \cdot \frac{1}{in}$

$\Delta_{BCD} := \frac{1}{R_{BCD}}$ $\Delta_{BCD} = 0.00125 \cdot in$

$\Delta_{wall} := \Delta_A + \Delta_{BCD}$ $\Delta_{wall} = 0.00138 \cdot in$

$R_{wall} := \frac{1 \cdot kip}{\Delta_{wall}}$ $R_{wall} = 727 \cdot \frac{kip}{in}$

Flexural-shear stiffness of bottom wall portion = 727 kips / in (1273 kN / cm)

α = ratio of flexural-shear stiffness of bottom portion compared to top portion;

$\alpha = 727 / 1651 = 0.44$

Determine compression strut properties of top portion of wall per FEMA 273;

$$\lambda_1 = \left[\frac{E_{me} t_{inf} \sin 2\theta}{4 E_{fe} I_{col} h_{inf}}\right]^{1/4}, \quad \lambda_1 = \left[\frac{619000\,\text{psi}(2.5")\sin(2*16.45°)}{4(3122000\,\text{psi})(3201\,\text{in.}^4)(98")}\right]^{1/4} = 0.0215$$

$$a = 0.175(\lambda_1 h_{col})^{-0.4} r_{inf}, \quad a = (0.175)[(0.0215)(120")]^{-0.4} 346" = 41.4" \text{ (105 cm)}$$

Therefore, the equivalent compression strut width for the bottom portion of the wall is:

$a_{bottom} = \alpha \times a_{top} = 0.44 \times 41.4" = 18.2"$(46.2 cm)

Note: This equivalent compression strut is used to model mezzanine wall line C since it is the same in elevation as the bottom portion of wall line D.

Determine compression-strut properties of typical longitudinal infill panel;

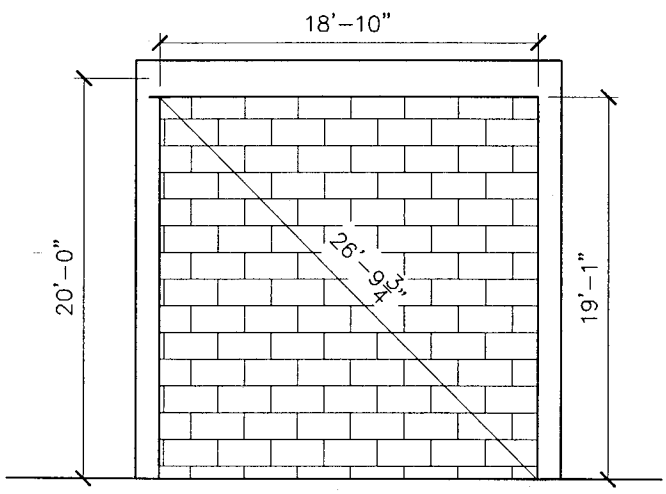

TYPICAL LONGITUDINAL INFILL PANEL

$$\lambda_1 = \left[\frac{E_{me} t_{inf} \sin 2\theta}{4 E_{fe} I_{col} h_{inf}}\right]^{1/4}, \quad \lambda_1 = \left[\frac{619000\,\text{psi}(2.5")\sin(2*45.38°)}{4(3122000\,\text{psi})(3201\,\text{in.}^4)(229")}\right]^{1/4} = 0.020$$

$$a = 0.175(\lambda_1 h_{col})^{-0.4} r_{inf}, \quad a = (0.175)[(0.02)(240")]^{-0.4} 322" = 30.1" \text{ (765 cm)}$$

- Horizontal Torsion: In torsionally irregular buildings, the effect of accidental torsion must be amplified by the factor, A_x. A building is considered torsionally irregular if the building has rigid diaphragms and the ratio $\delta_{max} / \delta_{avg}$ due to torsional moment exceeds 1.2.

Actual torsion: Captured directly by 3-dimensional model.
Accidental torsion: Taken as the product of the shear and a 5% horizontal offset.

Note: The 5% horizontal offset is based on the entire building dimensions for the roof diaphragm and from the mezzanine dimensions for the mezzanine diaphragm.

Determine accidental torsional forces:

Roof Level;

Transverse Seismic Forces: e_x = 5%(60') = 3', V = 305 k, T_x = (305 k)(3') = 915 kip-ft (1241 kN-m)
Longit. Seismic Forces: e_y = 5%(30') = 1.5', V = 305 k, T_y = (305 k)(1.5') = 458 kip-ft (621 kN-m)

Mezzanine Level;

Transverse Seismic Forces: e_x = 5%(20') = 1', V = 80 k, T_x = (80 k)(1') = 80 kip-ft (108 kN-m)
Longit. Seismic Forces: e_y = 5%(30') = 1.5', V = 80 k, T_y = (80 k)(1.5') = 120 kip-ft (163 kN-m)

Calculate displacements to determine need for torsional amplification: The program SAP 2000 was used to determine nodal displacements. The shear forces and accidental torsional moments are applied to the structure separately for forces in the longitudinal and transverse directions. The nodal displacements at the roof level are then averaged and checked against the maximum nodal displacement for each of the orthogonal loading conditions.

Transverse Seismic Forces:

δ_{ave} = 1.64" (42 mm), δ_{max} = 2.16" (55 mm) $\delta_{max} / \delta_{ave}$ = 2.16 / 1.64 = 1.32 > 1.2

Therefore, the accidental torsion for seismic excitation in the transverse direction must be amplified by A_x:

$$A_x = \left(\frac{\delta_{max}}{1.2\delta_{ave}}\right)^2 = \left(\frac{2.16}{(1.2)(1.64)}\right)^2 = 1.2 \qquad \text{(FEMA 310 Eq. 4-5)}$$

The accidental torsion for transverse seismic forces become:

Roof Level: T = 1.2(915 kip-ft) = 1098 kip-ft (1489 kN-m)
Mezzanine Level: T = 1.2(80 kip-ft) = 96 kip-ft (130 kN-m)

Longitudinal Seismic Forces:

δ_{ave} = 0.725" (18.4 mm), δ_{max} = 0.763" (19.4 mm) $\delta_{max} / \delta_{ave}$ = 0.763 / 0.725 = 1.05 < 1.2
Therefore, no amplification is needed for seismic excitation in the longitudinal direction.

- Load combinations:

The gravity load combinations used for analysis are:
$Q_G = 1.2\ Q_D + 0.5\ Q_L + 0.2Q_S$ (Q_S = 0 for this example) (Eq. 7-1)
$Q_G = 0.9\ Q_D$ (FEMA 310 Eq. 4-7)

Q_E = Earthquake forces = Direct shear and torsional forces determined previously

Deformation-controlled actions: The deformation-controlled design actions, Q_{UD}, are calculated according to:

$$Q_{UD} = Q_G \pm Q_E \qquad \text{(FEMA 310 Eq. 4-8)}$$

Force-controlled actions: The force-controlled design actions, Q_{UF}, are calculated by one of the three following methods:

(1) Q_{UF} = the sum of the forces due to gravity and the maximum force that can be delivered by deformation-controlled actions,

(2) When the forces contributing to Q_{UF} are delivered by yielding components of the seismic framing system,

$$Q_{UF} = Q_G \pm \frac{Q_E}{CJ} \qquad \text{(FEMA 310 Eq. 4-9)}$$

where $J = 1.5 + S_{DS} = 1.5 + 0.73 = 2.23 < 2.5$ (FEMA 310 Eq. 4-11)
and $C = 1.4$ (previously determined)

$$Q_{UF} = Q_G \pm \frac{Q_E}{CJ} = Q_G \pm \frac{Q_E}{(1.4)(2.23)} = Q_G \pm 0.32Q_E\,,$$

(3) For all other cases,

$$Q_{UF} = Q_G \pm \frac{Q_E}{C} = Q_G \pm \frac{Q_E}{1.4} = Q_G \pm 0.71Q_E \qquad \text{(FEMA 310 Eq. 4-10)}$$

4. Acceptance Criteria

(a.) LSP – Linear Static Procedure

Deformation-controlled Actions: Deformation-controlled actions for the structure include beam and column bending, and shear in the infill panels. Deformation-controlled actions in primary and secondary components and elements shall satisfy:

$$mQ_{CE} \geq Q_{UD} \qquad \text{(Eq. 5-1)}$$

Shear stress of infill panels: (Infill panels resist seismic loads only; no gravity loads on panels)

Longitudinal Infill Panels:

Maximum axial force in compression strut = 80.8 kips (359 kN)
Angle of strut elevation = atan(height / length) = 0.79 rad
Horizontal shear component = Axial x cos(θ) = (80.8 kips) x cos(0.79) = 56.7 kips (252 kN)
Q_{UD} = 56.7 kips (252 kN)

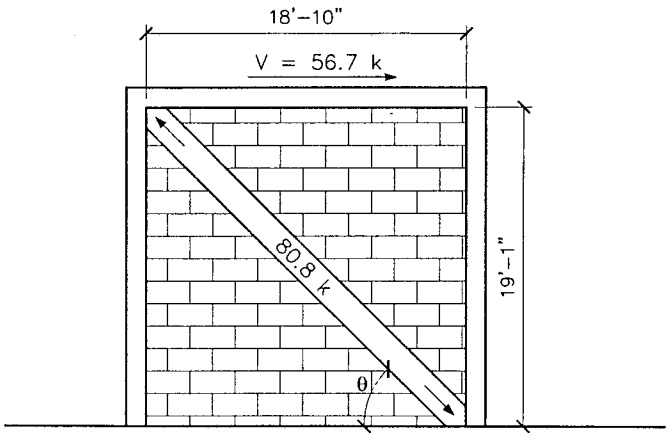

TYPICAL LONGITUDINAL INFILL PANEL FORCES

$Q_{CE} = V_{ine} = A_{ni}f_{vie}$ (FEMA 273 Eq. 7-15)
$f_{vie} = v_{me} = 33.8$ psi (determined previously)
A_{ni} = Equivalent solid thickness x Panel Length
$A_{ni} = (2.5")(18'\text{-}10") = 565$ in.^{2}
$Q_{CE} = (565 \text{ in.}^2)(33.8 \text{ psi}) = 19.1$ kips (85 kN)
$m = 1.0$ (FEMA 310 Table 4-5)
$mQ_{CE} = (1.0)(19.1 \text{ kips}) = 19.1$ kips (85 kN) < 56.7 kips (252 kN), FAILS

Transverse Infill Panels: Panels in upper portion of wall line D above mezzanine level beam

Maximum axial force in compression strut = 94.1 kips (419 kN)
Angle of strut elevation = atan(height / length) = 0.29 rad
Horizontal shear component = Axial x cos(θ) = (94.1 kips) x cos(0.29) = 90.2 kips (401 kN)
Q_{UD} = 90.2 kips (401 kN)

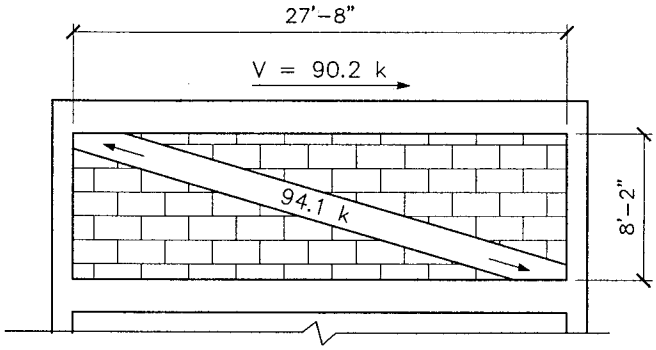

TRANSVERSE WALL LINE D ABOVE MEZZANINE

$A_{ni} = (2.5")(27'\text{-}8") = 830$ in.^{2}
$Q_{CE} = (830 \text{ in.}^2)(33.8 \text{ psi}) = 28.1$ kips (125 kN)
$m = 1.0$ (FEMA 310 Table 4-5)
$mQ_{CE} = (1.0)(28.1 \text{ kips}) = 28.1$ kips (125 kN)< 90.2 kips (401 kN), FAILS

Transverse Infill Panels: Panels in lower portion of wall line D below mezzanine level beam: The infill panels below the mezzanine level (along wall lines C and D) have holes for doors. The shear in the wall panels are distributed to each of the piers between the doors based on the pier's relative rigidities.

Angle of strut elevation = atan(height / length) = 0.32 rad

Rigidity A = R_A = 74 k / in (calculations not shown)
R_B = 654 k / in
R_C = 74 k / in
ΣR = 802 k / in

Wall line C
Maximum axial force in compression strut = 33.7 kips (150 kN)
Horizontal shear component = Axial x cos(θ) = (33.7 kips) x cos(0.32) = 32.0 kips (142 kN)
$V_A = V_C = V(R / \Sigma R)$ = 32 k (74 / 802) = 3 k (13 kN)
V_B = 32 k (654 / 802) = 26.1 k (116 kN)

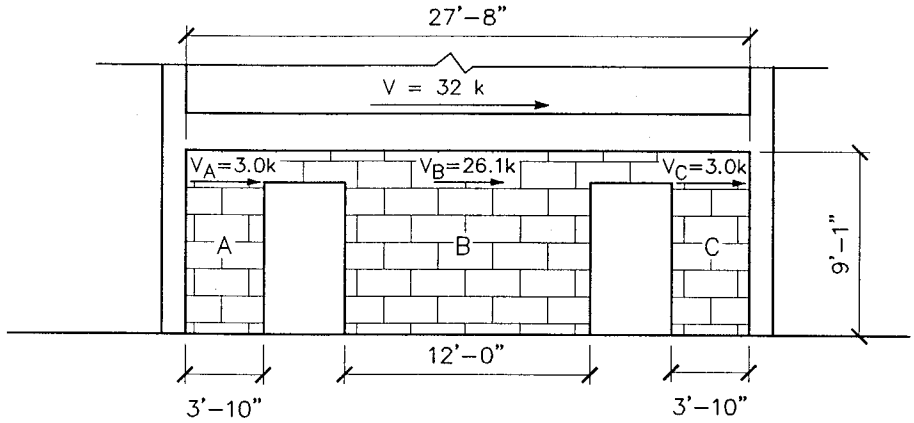

TRANSVERSE WALL LINE C BELOW MEZZANINE

Piers A and C:
Q_{UD} = 3 kips (13 kN)
A_{ni} = (2.5")(3'-10") = 115 in.^{2}
Q_{CE} = (115 in.^{2})(33.8 psi) = 3.9 kips (17 kN)
m = 1.0 (FEMA 310 Table 4-5)
mQ_{CE} = (1.0)(3.9 kips) = 3.9 kips (17 kN) > Q_{UD} = 3 kips (13 kN), OK
Pier B:
Q_{UD} = 26.1 k (116 kN)
A_{ni} = (2.5")(12') = 360 in.^{2}
Q_{CE} = (360 in.^{2})(33.8 psi) = 12.2 kips (54.3 kN)
m = 1.0 (FEMA 310 Table 4-5)
mQ_{CE} = (1.0)(12.2 kips) = 12.2 kips (54.3 kN)< 26.1 k (116 kN), FAILS

Total shear strength of wall line = 3.9 k + 3.9 k + 12.2 k = 20 k (89 kN)

Wall line D
Maximum axial force in compression strut = 40.8 kips (181 kN)
Horizontal shear component = Axial x cos(θ) = (40.8 kips) x cos(0.32) = 38.8 kips (173 kN)
$V_A = V_C = V(R / \Sigma R)$ = 38.8 k (74 / 802) = 3.6 k (16 kN)
V_B = 38.8 k (654 / 802) = 32 k (142 kN)

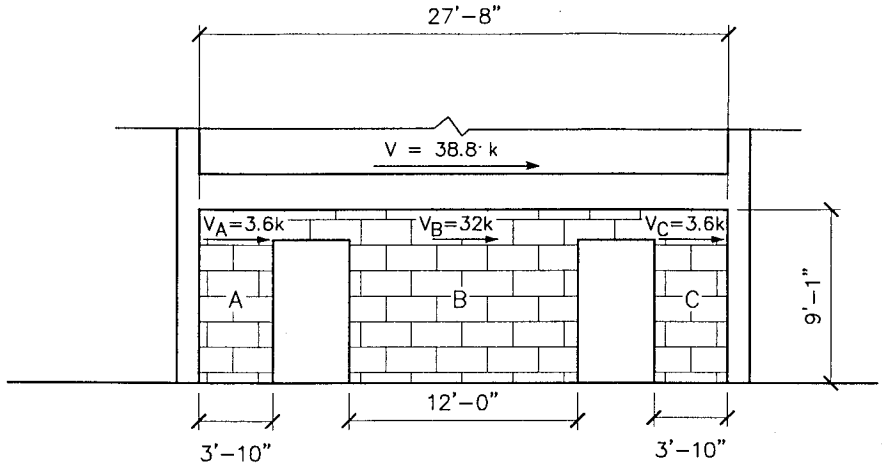

TRANSVERSE WALL LINE D BELOW MEZZANINE

Piers A and C:
Q_{UD} = 3.6 k (16 kN)
A_{ni} = (2.5")(3'-10") = 115 in.^{2}
Q_{CE} = (115 in.^{2})(33.8 psi) = 3.9 kips (17 kN)
m = 1.0 (FEMA 310 Table 4-5)
mQ_{CE} = (1.0)(3.9 kips) = 3.9 kips (17 kN) > Q_{UD} = 3.6 k (16 kN), OK
Pier B:
Q_{UD} = 32 k (142 kN)
A_{ni} = (2.5")(12') = 360 in.^{2}
Q_{CE} = (360 in.^{2})(33.8 psi) = 12.2 kips (54.3 kN)
m = 1.0 (FEMA 310 Table 4-5)
mQ_{CE} = (1.0)(12.2 kips) = 12.2 kips (54.3 kN)< 32 k (142 kN), FAILS

Total shear strength of wall line = 3.9 k + 3.9 k + 12.2 k = 20 k (89 kN)

Transverse Infill Panels: Panels in Wall line C below mezzanine level beam

This wall line is analyzed as was done for wall line D below the mezzanine.

Maximum axial force in compression strut = 56.4 kips
Angle of strut elevation = atan(height / length) = 0.32 rad
Horizontal shear component = Axial x cos(θ) = (56.4 kips) x cos(0.32) = 53.6 kips

Rigidity A = R_A = 119 k / in (calculations not shown)
R_B = 1047 k / in
R_C = 119 k / in
ΣR = 1285 k / in = 119 k/in + 119 k/in + 1047 k/in
$V_A = V_C = V(R / \Sigma R)$ = 53.6 k (119 / 1285) = 5.0 k
V_B = 53.3 k (1047 / 1285) = 43.7 k

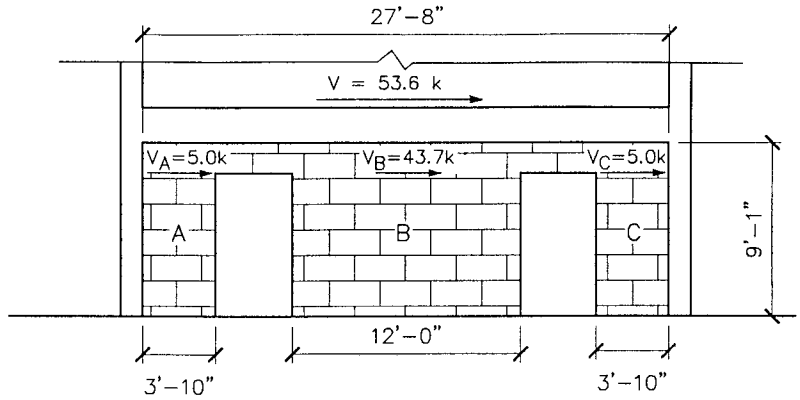

TRANSVERSE WALL LINE C BELOW MEZZANINE

Piers A and C:
Q_{UD} = 5.0 kips
A_{ni} = (4")(3'-10") = 184 in.^{2}
Q_{CE} = (184 in.^{2})(33.8 psi) = 6.2 kips
m = 1.0 (FEMA 310 Table 4-5)
mQ_{CE} = (1.0)(6.2 kips) = 6.2 kips > 5.0 kips, OK

Pier B:
Q_{UD} = 43.7 kips
A_{ni} = (4")(12') = 576 in.^{2}
Q_{CE} = (576 in.^{2})(33.8 psi) = 19.5 kips
m = 1.0 (FEMA 310 Table 4-5)
mQ_{CE} = (1.0)(19.5 kips) = 19.5 kips < 43.7 kips, FAILS

Total shear strength of wall line = 6.2 k + 6.2 k + 19.5 k = 31.9 k

Column flexure

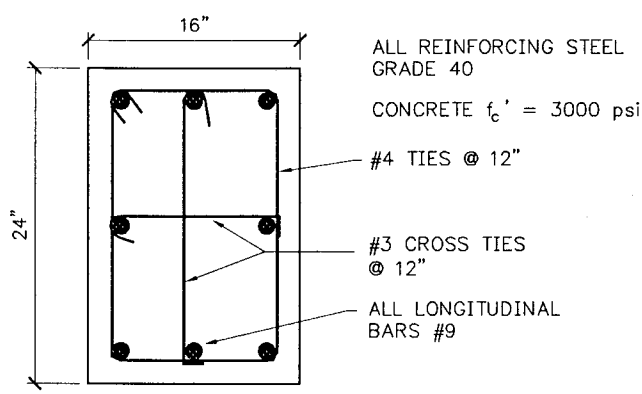

TYP. COLUMN

The columns resist moment in both their strong and weak directions. Rectangular columns have a complicated biaxial load-moment interaction surface that requires the use of computer programs to solve exactly. A solution that is suitable for hand calculations is used for this example. The biaxial interaction is checked with:

$\frac{M_x}{mM_{CEx}} + \frac{M_y}{mM_{CEy}} \leq 1.0$, where M_x and M_y are the design moments occurring simultaneously, and M_{CEx} and M_{CEy} are the uniaxial expected moment strengths for bending only about either the x or y-axes at the design axial load. The m-factor is included in the denominator to account for element ductility. This is a linear interpolation of the column expected strength between the two axes and is a conservative approach for axial load-moment interactions below the balance point

A check of a column at the garage opening is shown to illustrate the column flexural check.

Check of columns along grid line A:

Load combination; $Q_E = 100\%EQ_y + 30\%EQ_x$, $Q_G = 0.9D$

$M_x = Q_{Ex} = 540$ kip-ft (732 kN-m)
$M_y = Q_{Ey} = 46$ kip-ft (62.3 kN-m)
Axial Load ≈ 0
The column expected flexural strength, M_{CE}, is calculated assuming the tensile stress in yielding longitudinal reinforcement is 1.25 times the nominal yield stress = 1.25(40 ksi) = 50 ksi (per FEMA 273 Section 6.4.2.2). The column capacity was calculated using the BIAX computer program:

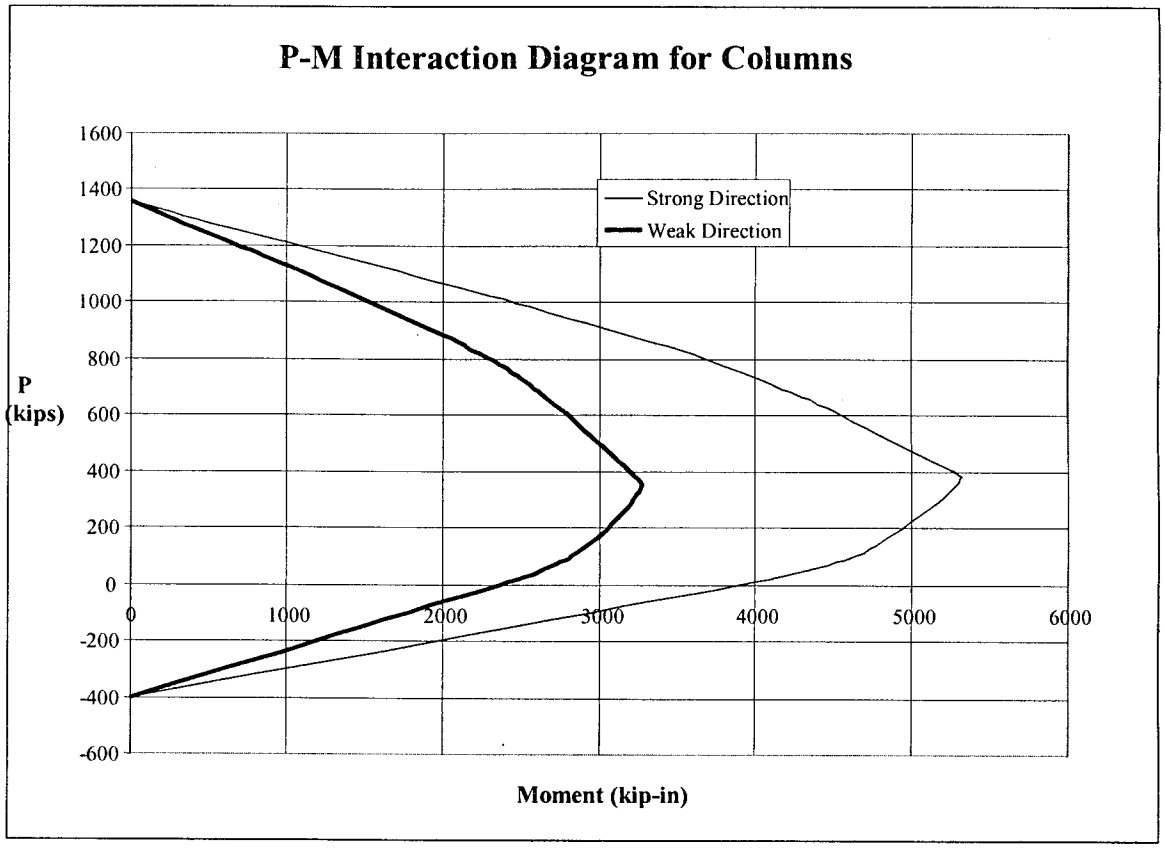

$M_{CEx} = 324$ kip-ft (439 kN-m) $M_{CEy} = 196$ kip-ft (266 kN-m)

The m-factor from FEMA 310 Table 4-4 for the Immediate Occupancy Performance Level is 1.5

$$\frac{M_x}{mM_{CEx}} + \frac{M_y}{mM_{CEy}} \leq 1.0 = \frac{540\text{kip} - \text{ft}}{(1.5)324\text{kip} - \text{ft}} + \frac{46\text{kip} - \text{ft}}{(1.5)196\text{kip} - \text{ft}} = 1.3 > 1.0\text{, FAILS}$$

The columns at the door opening along grid line A and the columns along grid line B were found to fail this condition. All of the rest of the columns were found to be adequate using this evaluation method. A check of the demand / capacity ratios for all of the columns was made using $\frac{M_x}{M_{CEx}} + \frac{M_y}{M_{CEy}}$ without the m-factors in the denominator to determine the ductility demand on the columns for flexure. This is required to evaluate the shear strength of the columns. FEMA 273 Table 6-5 states that elements with DCR's less than 2.0 are classified as having a low ductility demand. All of the columns in the structure were found to have DCR's less than 2.0 and are therefore classifies as having a low ductility demand.

Beam Flexure:

The beam flexure demands must be checked along the entire beam length due to the variations is longitudinal steel layout. The beam expected flexural strength, M_{CE}, is calculated assuming the tensile stress in yielding longitudinal reinforcement is 1.25 times the nominal yield stress = 1.25(40 ksi) = 50 ksi (per FEMA 273 Section 6.4.2.2). The beam flexural capacities were determined using the BIAX computer program.

Transverse Beams:

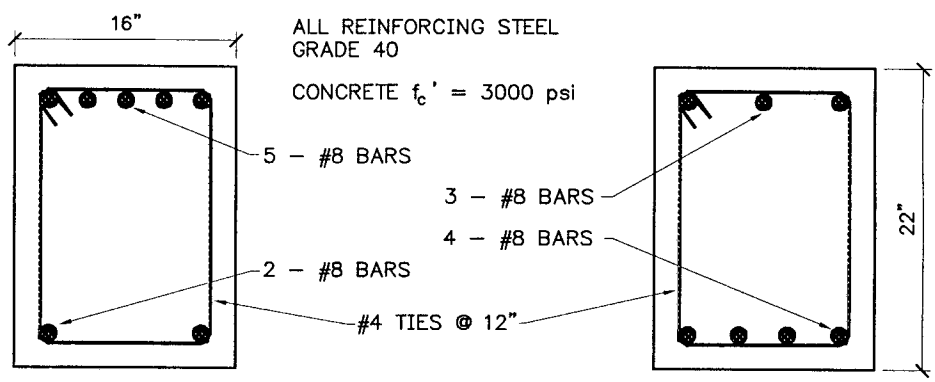

TYP. TRANSVERSE BEAM AT COLUMN FACE

TYP. TRANSVERSE BEAM AT MIDSPAN

1 in = 25.4 mm
1 psi = 6.89 kPa

Beams at roof level:

At beam ends;

Largest positive flexural demand = M_{UD}^{+} = 162 kip-ft (220 kN-m)
Largest negative flexural demand = M_{UD}^{-} = 301 kip-ft (408 kN-m)

Expected strengths at beam ends: M_{CE}^{+} = 121 kip-ft (164 kN-m), M_{CE}^{-} = 287 kip-ft (389 kN-m)

D/C ratios: M^{+} D/C =162 / 121 = 1.3 < 2.0 (low ductility demand from FEMA 273 Table 6-5)
M^{-}D/C = 301 / 287 = 1.05 < 2.0 (low ductility demand)

(Note: The D/C ratios are needed to determine the shear strength of the beams in the force-controlled actions section.)

The m-factors for reinforced concrete beams listed in FEMA 310 Table 4-4 for non-ductile beams = 1.5 for the Immediate Occupancy Performance Level.

mM_{CE}^{+} = (1.5)(121 kip-ft) = 182 kip-ft (247 kN-m) > 162 kip-ft (220 kN-m), OK
mM_{CE}^{-} = (1.5)(287 kip-ft) = 431 kip-ft (584 kN-m) > 301 kip-ft (408 kN-m), OK

At beam midpoints;

Largest positive flexural demand = M_{UD}^{+} = 114 kip-ft (155 kN-m)
Largest negative flexural demand = negligible negative moments at midspan

Expected strength at beam midpoint: M_{CE}^{+} = 233 kip-ft (316 kN-m)

D/C ratios: M^{+} D/C =114 / 233 = 0.5 < 2.0 (low ductility demand from FEMA 273 Table 6-5)

mM_{CE}^{+} = (1.5)(233 kip-ft) = 350 kip-ft > Q_{UD} = 114 kip-ft (155 kN-m), OK

<u>Beams at mezzanine level:</u>

At beam ends;

Largest positive flexural demand = M_{UD}^{+} = 88 kip-ft (119 kN-m)
Largest negative flexural demand = M_{UD}^{-} = 256 kip-ft (399 kN-m)

Expected strengths at beam ends: M_{CE}^{+} = 121 kip-ft (164 kN-m), M_{CE}^{-} = 287 kip-ft (389 kN-m)

D/C ratios: M^{+} D/C =88 / 121 = 0.7 < 2.0 (low ductility demand from FEMA 273 Table 6-5)
M^{-}D/C = 256 / 287 = 0.9 < 2.0 (low ductility demand)

mM_{CE}^{+} = (1.5)(121 kip-ft) = 182 kip-ft (247 kN-m) > 88 kip-ft (119 kN-m), OK
mM_{CE}^{-} = (1.5)(287 kip-ft) = 431 kip-ft (584 kN-m) > 256 kip-ft (399 kN-m), OK

At beam midpoints;

Largest positive flexural demand = M_{UD}^{+} = 136 kip-ft (184 kN-m)
Largest negative flexural demand = negligible negative moments at midspan

Expected strength at beam midpoint: M_{CE}^{+} = 233 kip-ft (316 kN-m)

D/C ratios: M^{+} D/C =136 / 233 = 0.6 < 2.0 (low ductility demand from FEMA 273 Table 6-5)

mM_{CE}^{+} = (1.5)(233 kip-ft) = 350 kip-ft > Q_{UD} = 136 kip-ft (184 kN-m), OK

Longitudinal Beams:

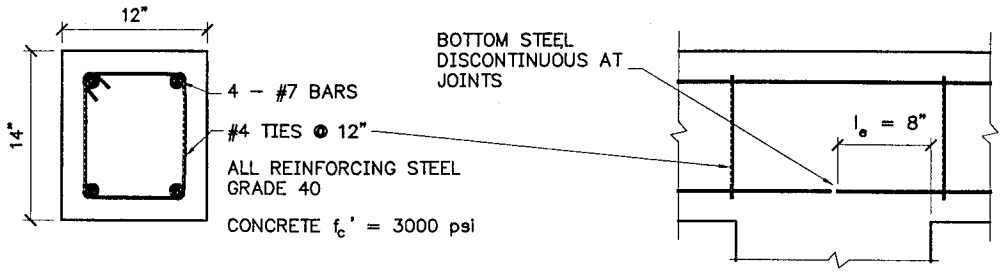

TYP. LONGITUDINAL BEAM CROSS SECTION

TYP. LONGITUDINAL BEAM–COLUMN JOINT ELEVATION

1 in = 25.4 mm
1 psi = 6.89 kPa

The bottom longitudinal steel in the longitudinal beams is not continuous through the beam-column joints. The steel is cut off at mid-depth of the columns (8" embedment length). FEMA 273 Section 6.4.5 states that the strength of straight, discontinuous bars embedded in concrete sections (including beam-column joints) with clear cover over the embedded bar not less than 3db may be calculated according to:

$$f_s = \frac{2500}{d_b} l_e \le f_y \qquad \text{(FEMA 273 Eq. 6-2)}$$

where f_s = maximum stress (in psi) that can be developed in an embedded bar having embedment length = l_e, (in inches), d_b = diameter of embedded bar (in inches), and f_y = bar yield stress (in psi).

$f_s = \frac{2500}{7/8"} 8" = 22857 \le 40000$, use f_s =22.9 ksi (158 MPa) for the bottom longitudinal bar strengths at the beam-column joints.

The top steel of the longitudinal beams is spliced at the beam midpoint with short splices = $20d_b$ = 20(7/8") = 17.5". The strength of the beam at the short splices would need to be evaluated using the methods of FEMA 273 Section 6.4.5 if there were negative flexural demands on the beams at their midpoints. For this example, the longitudinal beams experience only negligible negative moments at their midpoints so this condition does not need to be investigated.

At beam ends;

Largest positive flexural demand = M_{UD}^+ = 18.3 kip-ft (24.8 kN-m)
Largest negative flexural demand = M_{UD}^- = 34.1 kip-ft (46.2 kN-m)

Expected strengths at beam ends: M_{CE}^+ = 27 kip-ft (36.6 kN-m), M_{CE}^- = 52 kip-ft (70.5 kN-m)

D/C ratios: M^+ D/C =18.3 / 27 = 0.7 < 2.0 (low ductility demand from FEMA 273 Table 6-5)
M^-D/C = 34.1 / 52 = 0.7 < 2.0 (low ductility demand)

mM_{CE}^+ = (1.5)(27 kip-ft) = 40.5 kip-ft (55 kN-m) > 18.3 kip-ft (24.8 kN-m), OK
mM_{CE}^- = (1.5)(52 kip-ft) = 78 kip-ft (106 kN-m) > 34.1 kip-ft (46.2 kN-m), OK

Force-controlled Actions: Force-controlled actions for the structure include beam, column, and diaphragm shear. Force-controlled actions in primary and secondary components and elements shall satisfy:

$$Q_{CN} \geq Q_{UF} \qquad \text{(Eq. 5-2)}$$

Column Shear:

FEMA 273 Section 7.5.2.2.B describes two methods for determining the required strength of column members adjacent to infill panels. Method 2, used here, states that the expected shear strength of column members adjacent to an infill panel shall exceed the forces resulting from the development of expected column flexural strengths at the top and bottom of a column with reduced height equal to l_{ceff}. (Note: FEMA 273 states that this requirement can be waived if the expected masonry shear strength, v_{me}, as measured per the test procedures of FEMA 273 Section 7.3.2.4, is less than 50 psi. The expected masonry shear strength, v_{me}, is taken as the default value of 33.8 psi for this example, which is less than 50 psi. However, since this is a default value the actual shear strength may be greater than 50 psi. Therefore, this condition is checked to be conservative.)

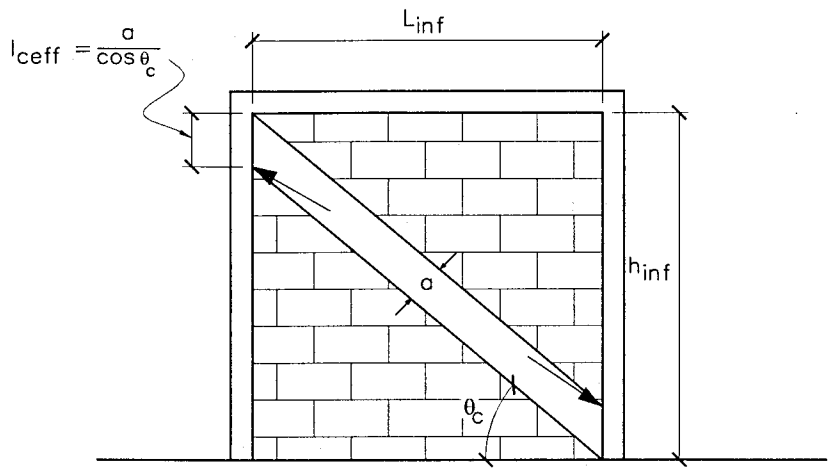

ESTIMATING FORCES APPLIED TO COLUMNS

$$l_{ceff} = \frac{a}{\cos\theta_c} \qquad \text{(FEMA 273 Eq. 7-16)}$$

$$\tan\theta_c = \frac{h_{inf} - \frac{a}{\cos\theta_c}}{L_{inf}} \qquad \text{(FEMA 273 Eq. 7-17)}$$

Equation 7-17 is solved by iterating on values of θ_c, then l_{ceff} is determined with the previously determined value of 'a' and θ_c.

Shear in column weak direction:

The longitudinal infill panels produce moments in the columns in the column's weak direction. The flexural capacity of the columns in the weak direction is 196 kip-ft

Determine l_{ceff} for typical longitudinal infill panels:
a = 28.6", h_{inf} = 229", L_{inf} = 226"
Iterate to determine:
$\theta_c = 0.7$
l_{ceff} = 39.3"

Determine shear in column weak direction:

$V_{col} = 2M_{pcol} / l_{ceff} = 2(197 \text{ kip-ft}) / (39.3" / 12'/") = 120$ kips (534 kN)
$Q_{UF} = V_{col} = 120$ kips (534 kN)

Shear strength of column per FEMA 273 Section 6.4.4:

The columns were shown to have low ductility demands in the check of their flexural capacities. FEMA 273 states within yielding regions of components with low ductility demands, and outside yielding regions, shear strength may be calculated using Chapter 11 of ACI 318. The ACI method is used to determine the transverse steel contribution to the shear strength, while FEMA 273 Eq. 6-3 is used to calculate the contribution of concrete to shear strength.

$$V_n = V_c + V_s \qquad \text{(ACI 318 Eq. 11-2)}$$

The columns are reinforced with #4 ties at every 12" and #3 cross-ties at every 12". Therefore, the area of the shear steel = $2(0.20 \text{ in}^2) + 0.11 \text{ in.}^2 = 0.51 \text{ in.}^2$ in both the strong and weak directions.

$$V_s = \frac{A_v f_y d}{s} \qquad \text{(ACI 318 Eq. 11-15)}$$

$$V_s = \frac{(0.51 \text{in.}^2)(40 \text{ksi})(13.5")}{12"} = 23 \text{ kips } (103 \text{ kN})$$

$$V_c = 3.5\lambda\left(k + \frac{N_u}{2000A_g}\right)\sqrt{f_c'}\, b_w d \qquad \text{(FEMA 273 Eq. 6-3)}$$

$\lambda = 1.0$ for normal weight concrete, $k = 1.0$ for elements with low ductility demands, and assume $N_u = 0$ to be conservative.

$$V_c = 3.5(1.0)\left((1.0) + \frac{0}{2000A_g}\right)\sqrt{3000}(24")(13.5") = 62 \text{ kips } (276 \text{ kN})$$

$V_n = Q_{CN} = 62$ kips + 23 kips = 85 kips (378 kN) < $Q_{UF} = 120$ kips (534 kN), NO GOOD

All of the columns are inadequate for shear in their weak direction (longitudinal direction) since they are all adjacent to infill panels. The shear in the strong direction (transverse direction) is not checked since the columns have already been shown to possess inadequate shear capacity.

Beam Shear:

FEMA 273 Section 7.5.2.2.C describes two methods for determining the required strength of beam members adjacent to an infill panel. Method 2, used here, states that the expected shear strength of beam members adjacent to an infill panel shall exceed the forces resulting from the development of expected beam flexural strengths at the ends of a beam member with a reduced length equal to l_{beff}. . (Note: FEMA 273 states that this requirement can be waived if the expected masonry shear strength, v_{me}, as measured per the test procedures of FEMA 273 Section 7.3.2.4, is less than 50 psi. The expected masonry shear strength, v_{me}, is taken as the default value of 33.8 psi for this example, which is less than 50 psi. However, since this is a default value the actual shear strength may be greater than 50 psi. Therefore, this condition is checked to be conservative.)

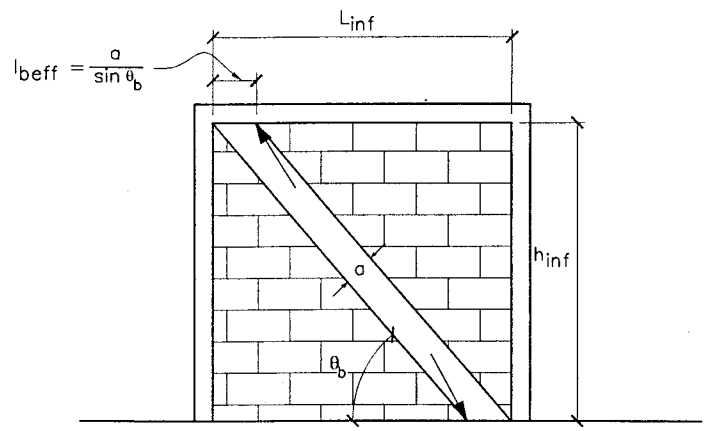

ESTIMATING FORCES APPLIED TO BEAMS

$$l_{beff} = \frac{a}{\sin\theta_b}$$ (FEMA 273 Eq. 7-18)

$$\tan\theta_b = \frac{h_{inf}}{L_{inf} - \frac{a}{\sin\theta_b}}$$ (FEMA 273 Eq. 7-19)

Equation 7-19 is solved by iterating on values of θ_b, then l_{beff} is determined with the previously determined value of 'a' and θ_b.

Longitudinal beams:
The flexural strengths of the longitudinal beams at the end zones are M_{CE}^{+} = 27 kip-ft, M_{CE}^{-} = 52 kip-ft.

Determine l_{beff} for the longitudinal infill panels:
a = 30.1", h_{inf} = 229", L_{inf} = 226"
Iterate to determine:
$\theta_b = 0.9$
l_{beff} = 38.7"

Determine beam shear:
$V_{beam} = M_{CE}^{+} + M_{CE}^{-} / l_{beff}$ = (27 kip-ft + 52 kip-ft)/ (38.7" / 12'/") = 24.5 kips
$Q_{UF} = V_{beam}$ = 24.5 kips (109 kN)

Shear strength of beams per FEMA 273 Section 6.4.4:
The beams were shown to have low ductility demands in the check of their flexural capacities. FEMA 273 states within yielding regions of components with low ductility demands, and outside yielding regions, shear strength may be calculated using Chapter 11 of ACI 318.

$$V_n = V_c + V_s$$ (ACI 318 Eq. 11-2)

The beams are reinforced with #4 ties at every 12". Therefore, the area of the shear steel = 2(0.20 in^2) = 0.40 in.^{2}.

$$V_s = \frac{A_v f_y d}{s}$$ (ACI 318 Eq. 11-15)

$$V_s = \frac{(0.40\,\text{in.}^2)(40\,\text{ksi})(11.5")}{12"} = 15\,\text{kips}\,(66.7\text{ kN})$$

$$V_c = 2\sqrt{f_c'}\,b_w d \qquad \text{(ACI 318 Eq. 11-3)}$$

$$V_c = 2\sqrt{3000}(12")(11.5") = 15\,\text{kips}\,(66.7\text{ kN})$$

V_n = 15 kips + 15 kips = 30 kips (133 kN) > Q_{UF} = 24.5 kips (109 kN)

Transverse Beams:

The transverse mezzanine beams along grid lines C and D and the upper transverse beam along grid line D are adjacent to infill panels. The transverse beams are all the same size with the same longitudinal flexural reinforcement. The flexural strengths of the transverse beams at the end zones are M_{CE}^+ = 121 kip-ft, M_{CE}^- = 287 kip-ft.

Mezzanine Beams:

Determine l_{beff} for the transverse infill panel along wall lines C and D below mezzanine:
a = 18.2", h_{inf} = 109", L_{inf} = 332"
Iterate to determine:
$\theta_b = 0.37$
l_{beff} = 50.3"

Determine beam shear:
$V_{beam} = M_{CE}^+ + M_{CE}^- / l_{beff}$ = (121 kip-ft + 287 kip-ft)/ (50.3" / 12'/") = 97 kips (431 kN)
$Q_{UF} = V_{beam}$ = 97 kips (431 kN)

Shear strength of beams per FEMA 273 Section 6.4.4:
The beams were shown to have low ductility demands in the check of their flexural capacities. FEMA 273 states within yielding regions of components with low ductility demands, and outside yielding regions, shear strength may be calculated using Chapter 11 of ACI 318.

$$V_n = V_c + V_s \qquad \text{(ACI 318 Eq. 11-2)}$$

The beams are reinforced with #4 ties at every 12" . Therefore, the area of the shear steel = 2(0.20 in^2) = 0.40 in.^{2}.

$$V_s = \frac{A_v f_y d}{s} \qquad \text{(ACI 318 Eq. 11-15)}$$

$$V_s = \frac{(0.40\,\text{in.}^2)(40\,\text{ksi})(19.5")}{12"} = 26\,\text{kips}\,(116\text{ kN})$$

$$V_c = 2\sqrt{f_c'}\,b_w d \qquad \text{(ACI 318 Eq. 11-3)}$$

$$V_c = 2\sqrt{3000}(16")(19.5") = 34\,\text{kips}\,(151\text{ kN})$$

V_n = 26 kips + 34 kips = 60 kips (267 kN) < Q_{UF} = 97 kips (431 kN), NO GOOD

Transverse beam along grid line D at roof level:

Determine l_{beff} for the transverse infill panel along wall line D above mezzanine:
a = 41.4", h_{inf} = 106", L_{inf} = 332"
Iterate to determine:
$\theta_b = 0.43$
l_{beff} = 99"

Determine the beam shear:
$V_{beam} = M_{CE}^{+} + M_{CE}^{-} / l_{beff}$ = (121 kip-ft + 287 kip-ft)/ (99" / 12'/") = 50 kips (222 kN)
$Q_{UF} = V_{beam}$ = 50 kips (222 kN)

The shear strength is the same as for the mezzanine beams;
V_n = 60 kips (267 kN) > Q_{UF} = 50 kips (222 kN), OK

Transverse beams along grid lines A, B, and C at roof level:

The transverse beams develop flexural hinges at their ends due to the different seismic load combinations. The beam shear demand is based on the flexural capacity of the beams per ACI 318 Section 21.3.4. The design shear force V_e is determined from consideration of the statical forces on the portion of the member between faces of the joints. It is assumed that moments of opposite signs corresponding to probable strength M_{pr} act at the joint faces and that the member is loaded with the factored tributary gravity load along its span.

Beam shear forces;

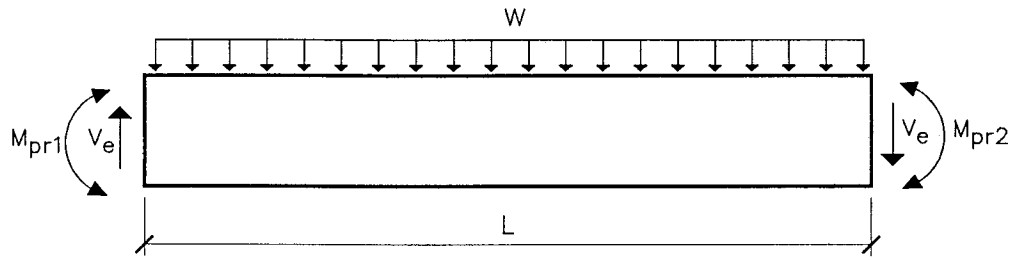

Beam moment capacities (from BIAX): Side 1 is the left end, Side 2 is the right end
M_{pr1}^{+} = 121 kip-ft M_{pr1}^{-} = 287 kip-ft M_{pr2}^{+} = 121 kip-ft M_{pr2}^{-} = 287 kip-ft

w = Gravity loads = 1.2D + 0.5L = 1.2(2.02 klf) + 0.5(0.4 klf) = 2.6 klf
L = 28 ft. (clear distance between column faces)

$V_e = (M_{pr1}^{+} + M_{pr2}^{-}) / L + wL/2$ = (121 kft + 287 kft) / 28' + (2.6 klf)(28') / 2 = 51 kips (227 kN)

$Q_{UF} = V_e$ = 51 kips (227 kN)
V_n = 60 kips (267 kN) (determined previously)
V_n = 60 kips > 51 kips, OK

Diaphragm shear forces:

The mezzanine diaphragm is not directly connected to the infill panels along the longitudinal walls (lines 1 and 2). Therefore, the diaphragms are not evaluated and rehabilitation is needed.

5. *Evaluation results:*

The building lacks the required strength to resist seismic forces. The components found to be deficient include:

- The infill panels are overstressed in shear by up to 300%. Nearly all of the URM infill panels were found to possess inadequate shear strength.
- The columns and beams were found to lack the required shear strength for forces imposed by the infill panels.

- The columns along grid lines A and B were found to possess inadequate flexural strength. The high flexural demands are due to building torsion. The large door opening along grid line A has very low stiffness compared to the shear walls along grid line D and the partial shear wall along grid line C, causing large torsional demands.
- The mezzanine diaphragm lacks direct connection detailing for transfer of shear forces to the longitudinal infill panels.

G. Structural Evaluation (Tier 3) (from Table 5-2)

A Tier 3 is not completed as it would only show that the building is deficient as was shown in the Tier 2 evaluation.

H. Nonstructural Evaluation (Tier 2) (from Table 5-3)

Nonstructural components are not considered in this example.

I. Final Assessment (from Table 6-1)

1. Structural evaluation assessment:

The structure was found to lack strength to resist the prescribed lateral forces (see step F.5 above for a list of deficiencies). The building is a serious life safety hazard due to the high overstress in the infill panels and the nonductile detailing of the concrete-framing members, but rehabilitation is possible.

2. Structural rehabilitation strategy:

The rehabilitation strategy is to add strength to the structure and reduce the torsional demands on the framing. The infill panels may be strengthened by adding a layer of shotcrete to the masonry. The shotcrete will be detailed such that the rehabilitated panels will act as complete shear walls rather than compression struts. This will reduce the demands on the frames as the walls will be much stiffer and resist more force. The torsion problem may be reduced by moving the center of rigidity away from the rear of the building (along grid line D) towards the garage opening (along grid line A). The addition of exterior buttresses to the columns along grid line A will add rigidity to the front of the building, thus reducing the torsion.

3. Structural rehabilitation concept:

The infill panels will be strengthened by adding a 4" (102 mm) layer of shotcrete to the interior of the walls. The shotcrete is placed on the interior so that it can be connected to the existing framing, allowing the rehabilitated walls to act as shear elements rather than compression struts. The new shotcrete will be doweled to the existing framing so that it will act as a composite section. At the mezzanine area, the new vertical steel in the shotcrete will pass through holes drilled and grouted in the mezzanine slab. This will provide a direct shear transfer mechanism between the mezzanine diaphragm and the new shotcrete walls for seismic forces in the longitudinal direction.

Buttresses will be added to the front of the building (along grid line A) to reduce the torsional response of the structure. The buttresses will be tapered from 8' (2.44 m) long at the base to 2' (0.61 m) long at the top. New foundations with hold-down piles must be constructed for the buttresses to resist the large overturning demands. Hold-down piles are designed to mobilize the weight of a tributary wedge of soil to resist the uplift forces. The piles consist of a high strength steel bar grouted in a drilled hole. The end of the bar is initially grouted a sufficient length to develop the strength of the bar and at the appropriate depth to

mobilize the necessary soil wedge. The remainder of the bar is sheathed so as to preclude bonding with the final grouting.

4. *Nonstructural evaluation assessment:*

Nonstructural assessment is not in the scope of this example.

5. *Nonstructural rehabilitation strategy:*

Nonstructural assessment is not in the scope of this example.

6. *Nonstructural rehabilitation concept:*

Nonstructural assessment is not in the scope of this example.

At this point a cost estimating specialist will develop the programming level cost estimate for the project. This estimate will include the structural seismic rehabilitation costs, based on the material quantities developed by the structural evaluator, along with the costs for nonstructural seismic rehabilitation and all other items associated with the building upgrade.

J. Evaluation Report (from Table 6-2)

At this point an evaluation report would be completed per the steps in Table 6-2. This step is not done for this design example.

The Evaluation Process is complete.

Seismic Rehabilitation Design (Chapter 7)

Since rehabilitation of the structural system was the seismic hazard mitigation method selected , the following procedures are completed.

K. Rehabilitation (from Table 7-1)

1. Review Evaluation Report and other available data:

The evaluation report completed earlier was reviewed along with the available drawings.

2. Site Visit

The site was visited during the building evaluation. No further meaningful information could be gathered by another visit.

3. Supplementary analysis of existing building (if necessary)

Supplementary analysis of the existing building is not necessary. The evaluation report contains sufficient detail to commence with the rehabilitation design.

4. Rehabilitation concept selection

The rehabilitation concept selected is discussed in step I.3 above.

5. Rehabilitation design

The following figures show the rehabilitation design selected:

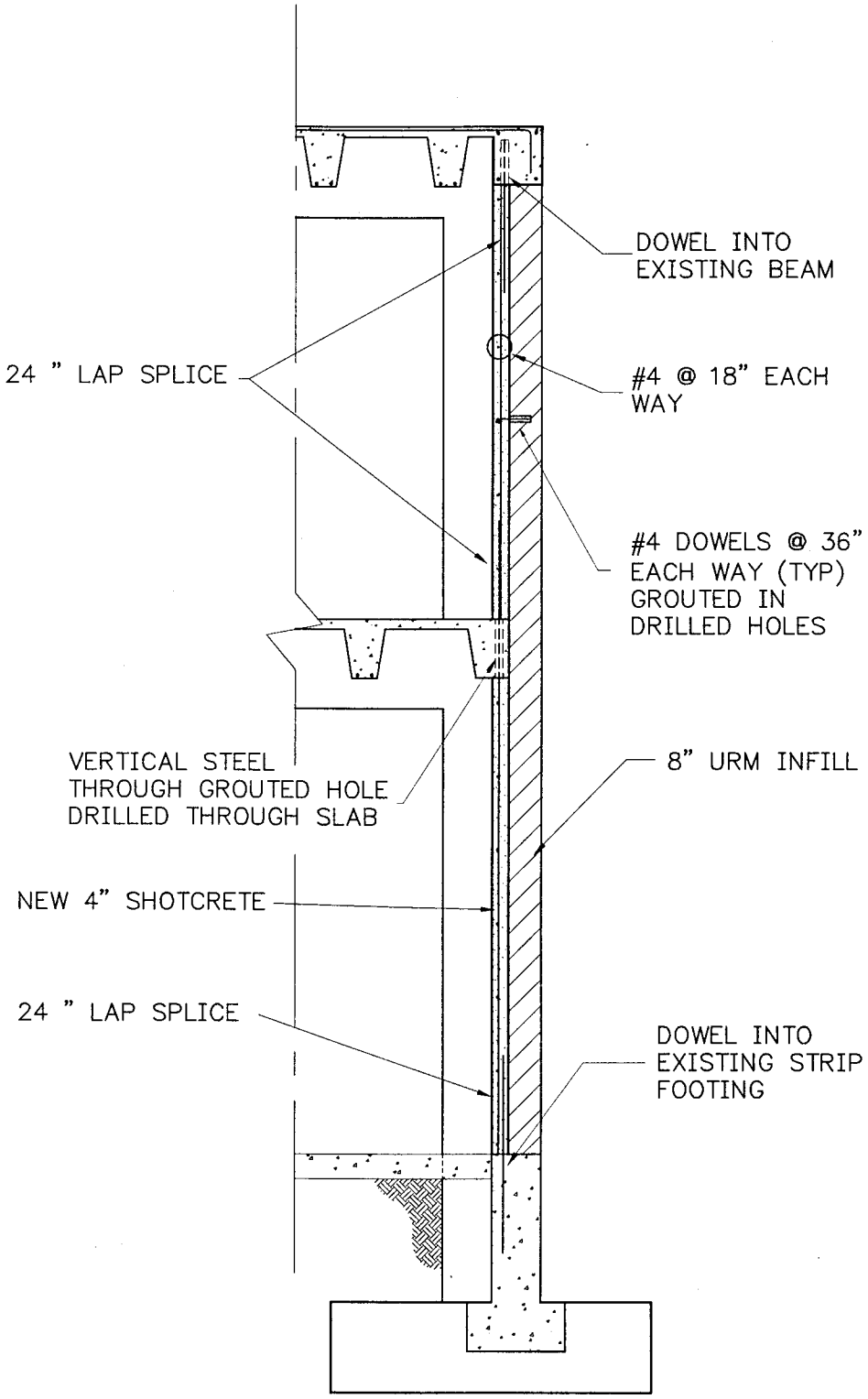

REHABILITATED WALL SECTION THROUGH

WALL LINE (2) AT MEZZANINE

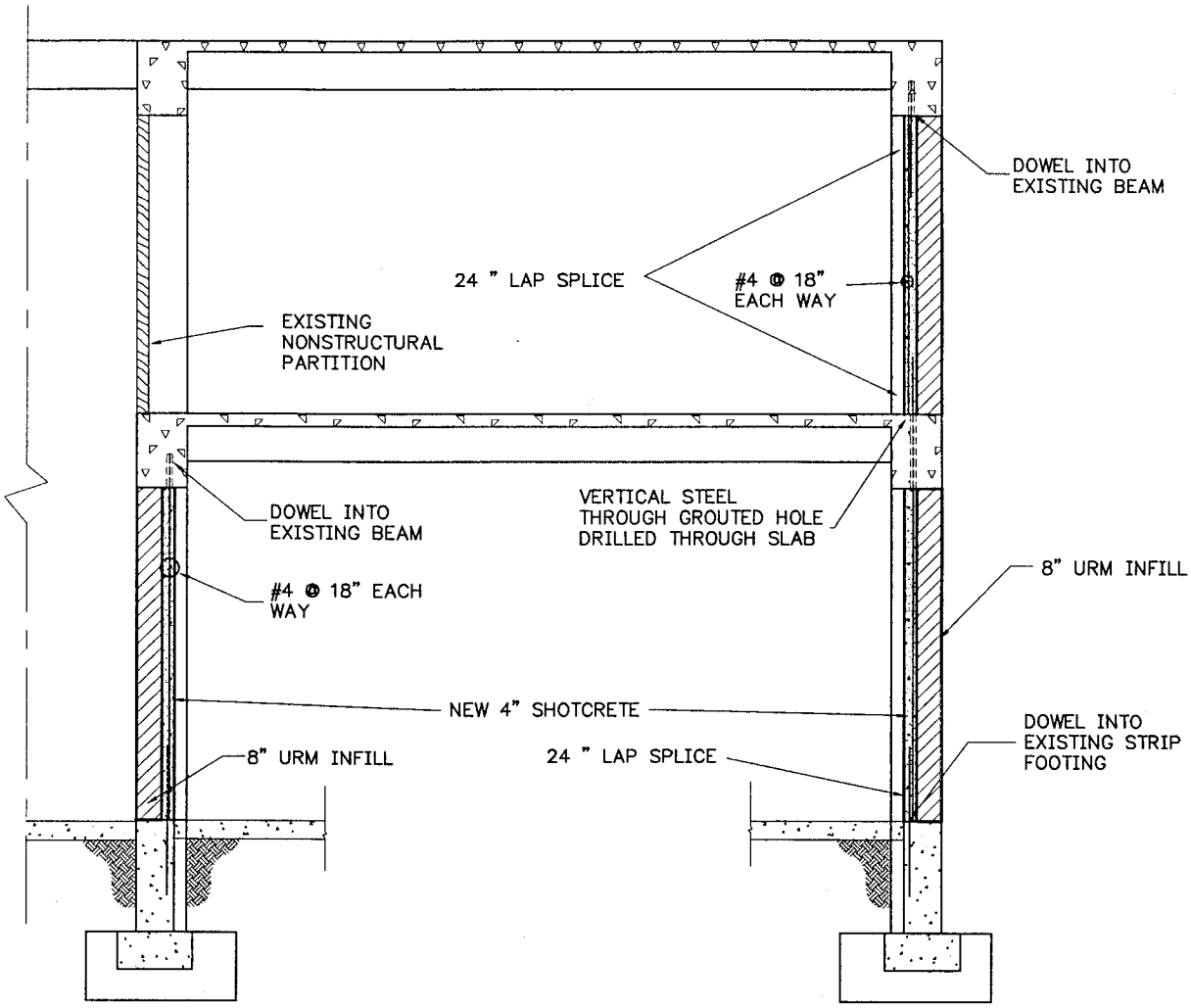

REHABILITATED WALL SECTION THROUGH

WALL LINES (C) AND (D) AT MEZZANINE

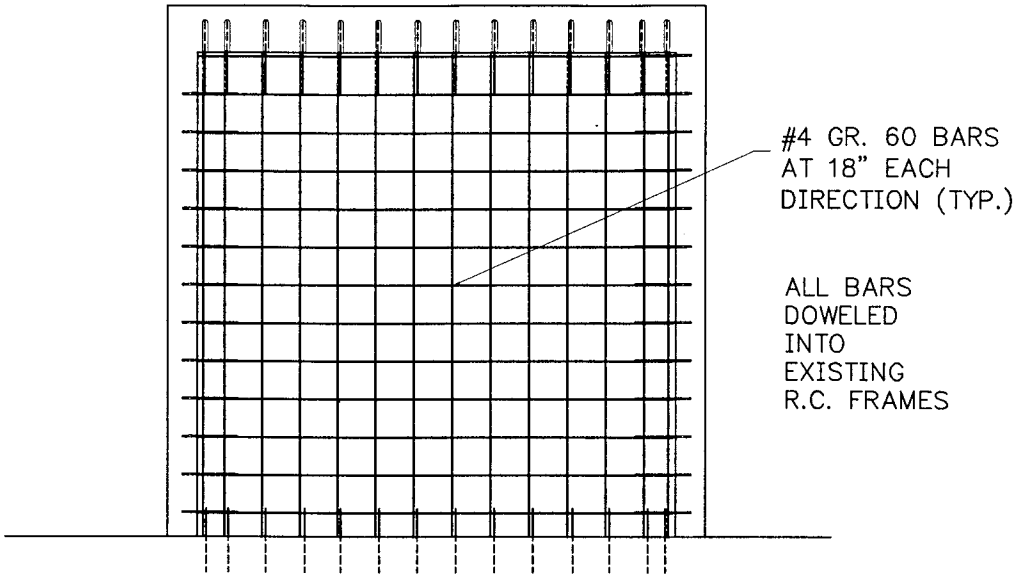

TYPICAL SHOTCRETE REINFORCMENT
FOR LONGITUDINAL INFILL PANEL

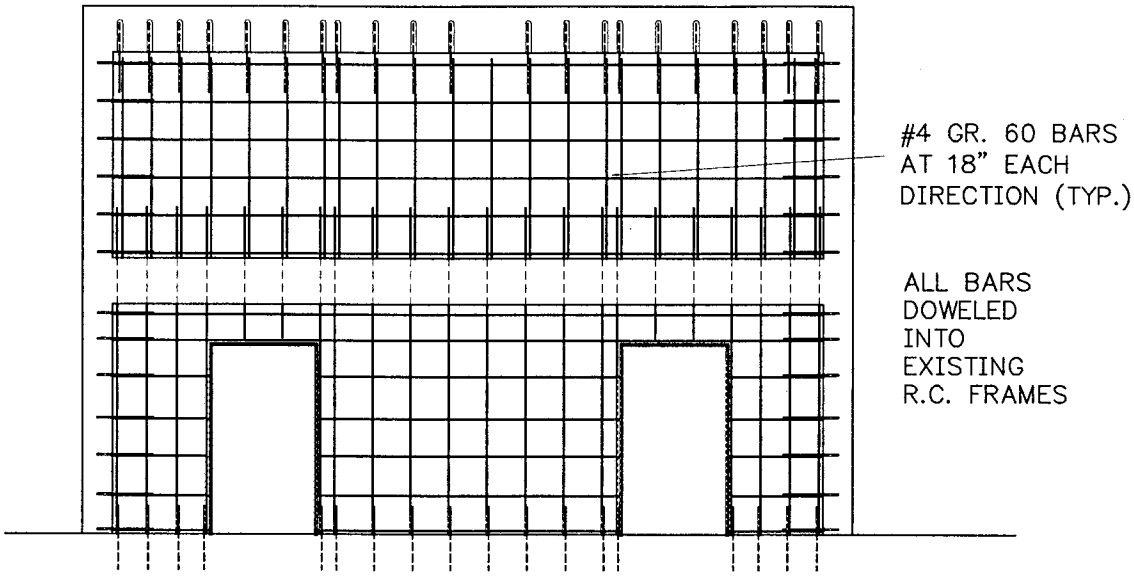

SHOTCRETE REINFORCEMENT FOR

WALL LINE (D)

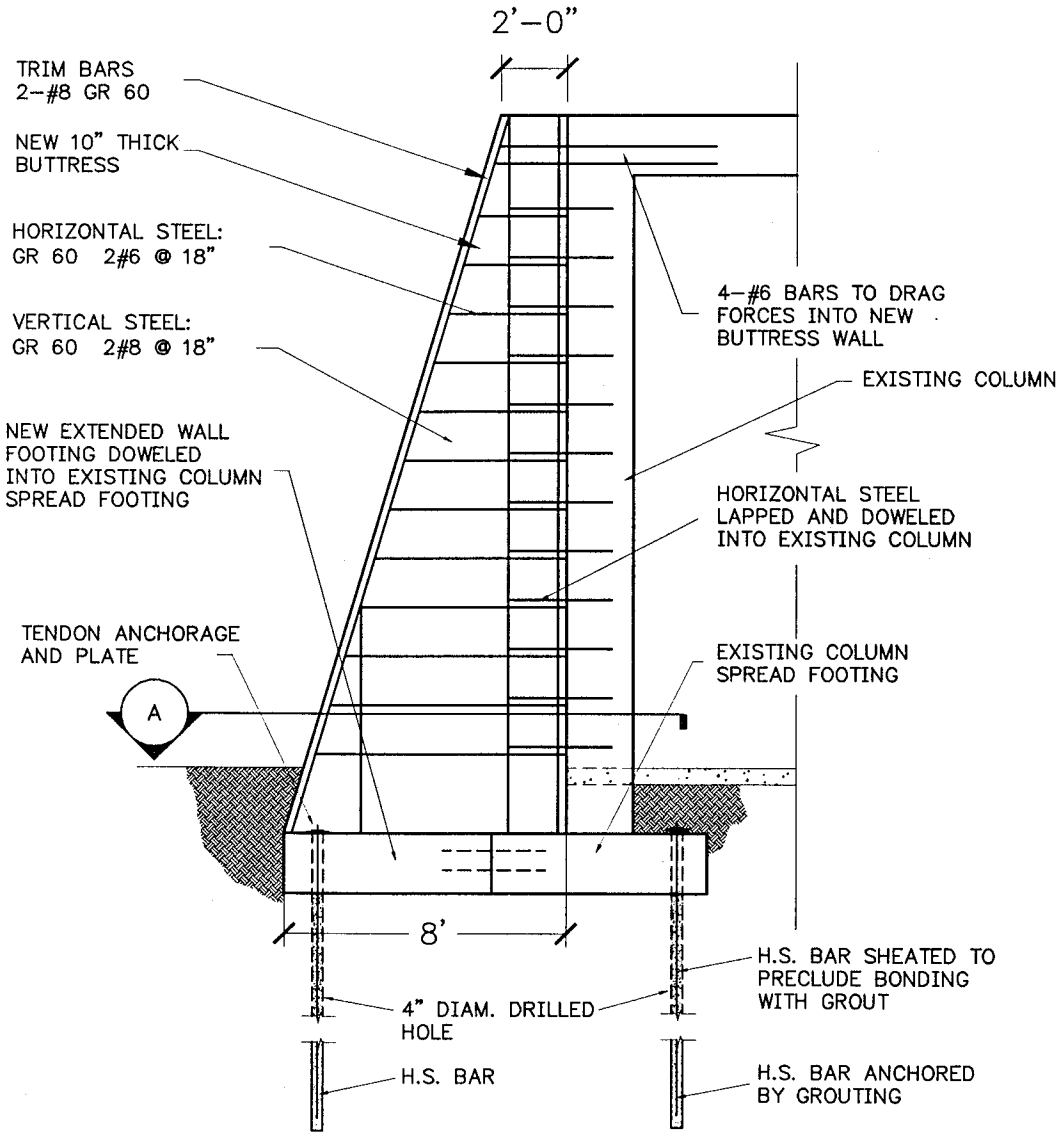

NEW BUTTRESS WALL DETAILS

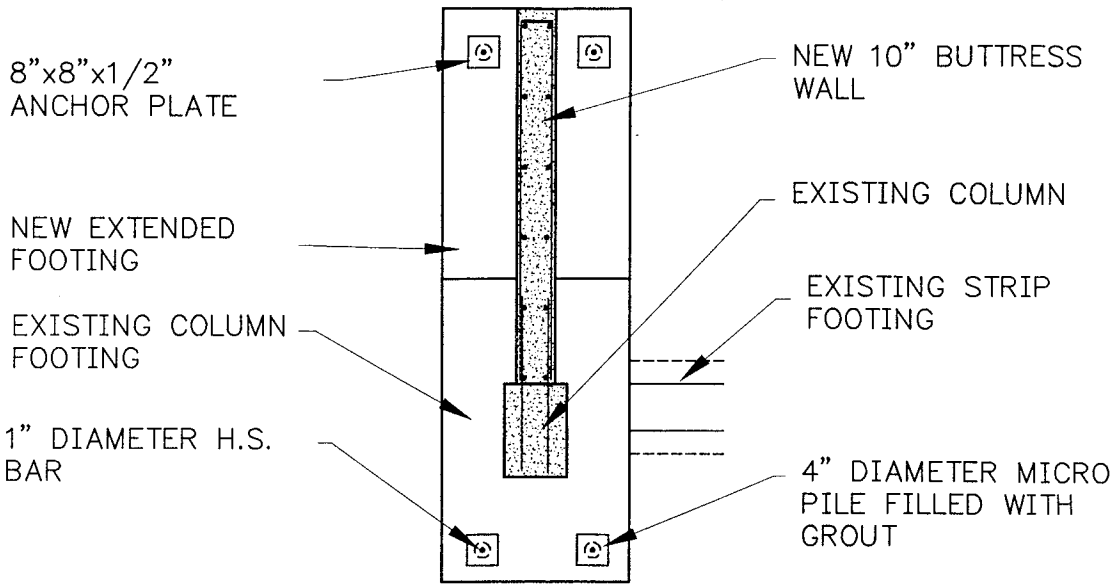

SECTION (A) THROUGH BUTTRESS

1 in = 25.4 mm

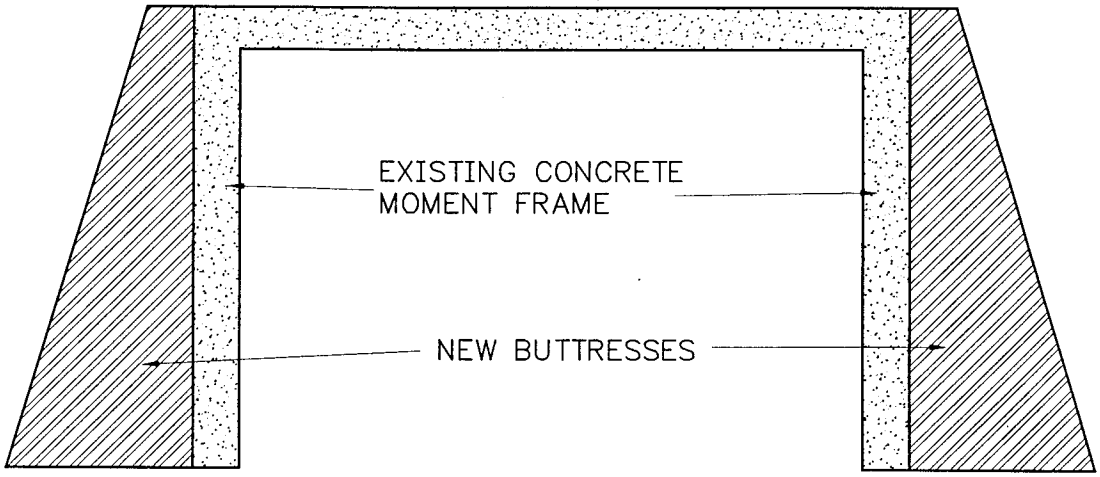

ELEVATION OF WALL LINE (A) SHOWING NEW BUTTRESSES AT DOOR OPENING

6. *Confirming evaluation of rehabilitation*

a. *Analytical procedures*

The rehabilitated structure is evaluated using the Linear Static Procedure (LSP) outlined in FEMA 273 Section 3.3.1. The building model is created using the mathematical modeling assumptions of FEMA 273 Section 3.2.

- Basic Assumptions (FEMA 273 Section 3.2.2.1)

The building is modeled, analyzed and evaluated as a three-dimensional assembly of elements and components. The roof and mezzanine diaphragms are assumed to be rigid and capable of transmitting torsional forces. The computer program ETABS was used for the modeling of the structure.

- Horizontal Torsion (FEMA 273 Section 3.2.2.2)

The total torsional moment at a given floor level is set equal to the sum of the following two torsional moments:

1. Actual Torsion: The moment resulting from the eccentricity between the centers of mass at all floor levels above including the given floor, and the center of rigidity of the vertical seismic elements in the story below the given floor. The effects of actual torsion are captured directly by the ETABS computer model.
2. Accidental Torsion: An accidental torsional moment produced by horizontal offset in the centers of mass, at all floors above and including the given floor, equal to a minimum of 5% of the horizontal dimension at the given floor level measured perpendicular to the direction of the applied load. The effect of accidental torsion shall be considered if the maximum lateral displacement due to this effect at any point on any floor diaphragm exceeds the average displacement by more than 10%. This effect shall be calculated independent of the effect of actual torsion. For linear analysis of building with rigid diaphragms, when the ratio $\delta_{max} / \delta_{avg}$ due to total torsional moment exceeds 1.2, the effect of accidental torsion shall be amplified by a factor A_x:

$$A_x = \left(\frac{\delta_{max}}{1.2\delta_{avg}} \right)^2 \qquad \text{(FEMA 273 Eq. 3-1)}$$

The torsional forces and the need for the amplification factor are determined after the vertical distribution of lateral forces is calculated.

- Primary and Secondary Actions, Components, and Elements (FEMA 273 Section 3.2.2.3)

All of the columns, beams, and walls are considered to be primary elements.

- Stiffness Assumptions (FEMA 273 Section 6.4.1.2 for concrete components)

The effective stiffness values for beams, columns, and walls are taken from FEMA 273 Table 6-4

Beams:	Flexural Rigidity = $0.5E_cI_g$	Shear rigidity = $0.4E_cA_w$
Columns in compression:	Flexural Rigidity = $0.7E_cI_g$	Shear rigidity = $0.4E_cA_w$
Columns in tension:	Flexural Rigidity = $0.5E_cI_g$	Shear rigidity = $0.4E_cA_w$
Walls (cracked):	Flexural Rigidity = $0.5E_cI_g$	Shear rigidity = $0.4E_cA_w$

E_c = modulus of elasticity for concrete and shotcrete = $w_c^{1.5} 33\sqrt{f_c'}$ (ACI Section 8.5.1)

E_c for normal weight concrete may be taken as $57000\sqrt{f_c'}$

E_c for existing concrete moment frames and new buttresses $= 57000\sqrt{3000} = 3122$ ksi

E_c for 3000 psi lightweight shotcrete $= (120\text{pcf})^{1.5} 33\sqrt{3000} = 2376$ ksi

The rehabilitated walls are assumed to act as composite sections due to the presence of the existing unreinforced masonry and the new shotcrete. The stiffness of the walls is evaluated by assuming that the walls are 4" (102 mm) thick (this is equal to the new shotcrete thickness) but with a modified modulus of elasticity equal to the combination of the new shotcrete and the existing masonry.

E_{me} = 619 ksi (determined previously)

The modulus of elasticity used for the wall elements is = 2376 ksi + 619 ksi = 2995 ksi

- Foundation Modeling (FEMA 273 Section 3.2.2.6)

The foundation is assumed to be rigid and is not included in the mathematical model.

- P-Δ Effects (FEMA 273 Section 3.2.5)

Two type of P-Δ (second-order) effects are addressed:

1. Static P-Δ effects: The stability coefficient θ, is assumed to be less than 0.1. Therefore, static P-Δ effects are ignored.
2. Dynamic P-Δ effects: The coefficient C_3 captures this effect for the linear procedures.

- Multidirectional Excitation Effects (FEMA 273 Section 3.2.7)

The multidirectional (orthogonal) excitation effects are captured by evaluating the forces and deformations associated with 100% of the seismic displacement in one horizontal direction plus the forces associated with 30% of the seismic displacements in the perpendicular horizontal direction.

- Component Gravity Loads and Load Combinations

There are two gravity load combinations that must be considered. The first combination is different than the FEMA 273 equation while the second is taken directly from FEMA 273.

$Q_G = 1.2\ Q_D + 0.5\ Q_L + 0.2Q_S$ ($Q_S = 0$ for this example) (Eq. 7-1)

$Q_G = 0.9\ Q_D$ (FEMA 273 Eq. 3-3)

- Period Determination (FEMA 273 Section 3.3.1.2)

The building period is determined using Method 2 of FEMA 273 Section 3.3.1.2.

$T = C_t h_n^{3/4}$ (FEMA 273 Eq. 3-4)

The building is assumed to act as a shear wall structure in both the longitudinal and transverse direction. The C_t factor is 0.020 for shear wall structures.

$T = 0.020(20')^{3/4} = 0.19$ seconds

- Pseudo Lateral Load (FEMA 273 Section 3.3.1.3)

$V = C_1 C_2 C_3 S_a W$ (FEMA 273 Eq. 3-6)

<u>C_1 factor:</u>

$C_1 = 1.5$ for $T < 0.10$, $C_1 = 1.0$ for $T \geq T_0$

where $T_0 = S_{D1} / S_{DS}$ for 5% damping, $T_0 = 0.41 / 0.73 = 0.56$ seconds
$C_1 = 1.40$ by linear interpolation for $0.10 < T = 0.19 < 0.56$ seconds

C_2 factor:

The C_2 coefficient is taken form FEMA 273 Table 3-1 to be equal 1.0 for the Immediate Occupancy Performance Level.

$C_2 = 1.0$

C_3 factor:

It is assumed that the building does not stability problems due to stiffness of the shear walls.

$C_3 = 1.0$

S_a, Spectral Acceleration:

$S_a = 0.73$ (determined previously)

W, Seismic Weight

The weight of the building is updated to account for the additional weight of the new shotcrete and buttress shear walls.

The new building seismic weights are:

Weight tributary to the roof level:	352.3 kips
Weight tributary to the mezzanine level:	125.4 kips
Total weight, W:	478 kips (2126 kN)

$V = C_1C_2C_3S_aW = (1.40)(1.0)(1.0)(0.73)(478 \text{ kips}) = 489 \text{ kips } (2175 \text{ kN})$

- Vertical Distribution of Seismic Forces:

  The lateral force is distributed to the roof and mezzanine levels assuming that the building acts as a one-story structure. The pseudo lateral force is distributed to the roof and mezzanine based on tributary mass.

Level	w_x (kips)	$C_1C_2C_3S_a$	F_x (kips)	F_x (kN)
Roof	352	1.025	361	1606
Mezzanine	125	1.025	128	572

- Determine Torsional Forces and need for Amplification Factor

The total torsion has contributions from both actual and accidental torsion. The actual torsion is automatically captured by the three dimensional ETABS computer model. The accidental torsion must be calculated.

Transverse Seismic Forces:

Roof Level:

Shear:	361 kips
Perpendicular dimension:	60 ft.
5% offset:	3 ft.
Torsion = (361 k)(3') =	1083 kip-ft (1469 kN-m)

Mezzanine Level:

Shear:	128 kips
Perpendicular dimension:	20 ft.
5% offset:	1 ft.
Torsion = (44 k)(1') =	128 kip-ft (174 kN-m)

Longitudinal Seismic Forces:

Roof Level:

Shear:	361 kips
Perpendicular dimension:	30 ft.
5% offset:	1.5 ft.
Torsion = (397 k)(1.5') =	542 kip-ft (735 kN-m)

Mezzanine Level:

Shear:	80 kips
Perpendicular dimension:	30 ft.
5% offset:	1.5 ft.
Torsion = (44 k)(1.5') =	120 kip-ft (163 kN-m)

These accidental torsional forces are placed upon the computer model of the structure to determine the need for torsional amplification.

Seismic forces in the longitudinal direction:

Average displacement of the roof diaphragm, $\delta_{avg} = 0.0165"$
Maximum displacement of point on diaphragm, $\delta_{max} = 0.0176"$
$\delta_{max} / \delta_{ave} = (0.0176") / (0.0165") = 1.07 < 1.2$
$\therefore$ No Torsional amplification needed
It was determined that the mezzanine level torsion required no amplification either (calculations not shown).

Seismic forces in the transverse direction:

Average displacement of the roof diaphragm, $\delta_{avg} = 0.092"$
Maximum displacement of point on diaphragm, $\delta_{max} = 0.118"$
$\delta_{max} / \delta_{ave} = (0.118") / (0.092") = 1.28 > 1.2$
$\therefore$ Torsional amplification needed

$$A_x = \left(\frac{0.118"}{1.2(0.092")}\right)^2 = 1.14 < 3.0$$

Amplified Accidental Roof Level Torsion = A_xT = (1.14)(1083 kip-ft) = 1235 kip-ft (1675 kN-m)

Amplified Accidental Mezzanine Level Torsion = A_xT = (1.14)(128 kip-ft) = 146 kip-ft (198 kN-m)

Component Forces:

Deformation-Controlled Components

The deformation-controlled actions consist of wall, beam, and column flexure, and shear in the wall elements (Footnote (1) from TI 809-04 Table 7-3 states that for shear walls and wall segments where inelastic behavior is governed by shear, the axial load on the member must be $\leq$ 0.15Agfc', the longitudinal reinforcement must be symmetrical, and the maximum shear stress must be $\leq 6\sqrt{f_c'}$, otherwise the shear shall be considered to be a force-controlled action). The design actions Q_{UD} are calculated according to:

$Q_{UD} = Q_G \pm Q_E$ (FEMA 273 Eq. 3-14)
Q_E = Design earthquake loads
Q_G = Design gravity loads

Wall Flexural Forces: The maximum moment from all of the load combinations is shown for each typical wall panel element.

Typical Longitudinal Walls (grid lines 1 and 2):

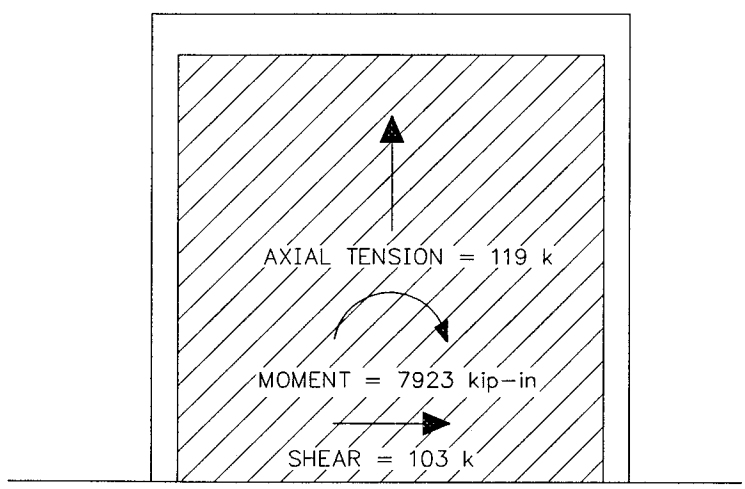

TYPICAL LONGITUDINAL INFILL PANEL

1 kip = 4.448 kN
1 kip-in = 0.113 kN-m

Wall Line D, Panel Above Mezzanine Level:

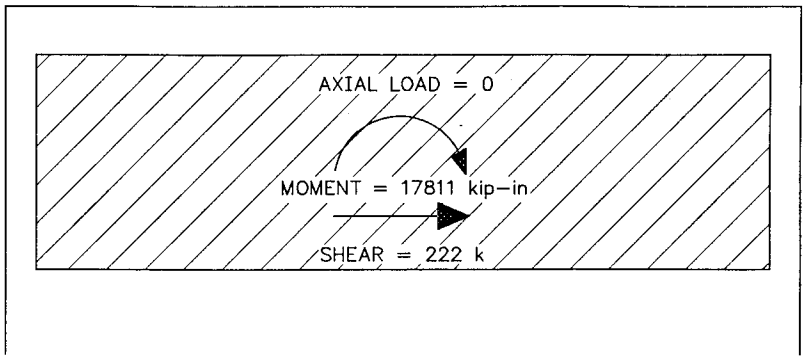

TRANSVERSE WALL LINE D ABOVE MEZZANINE

1 kip = 4.448 kN
1 kip-in = 0.113 kN-m

Wall Lines C & D; Typical Panels Below the Mezzanine Level:

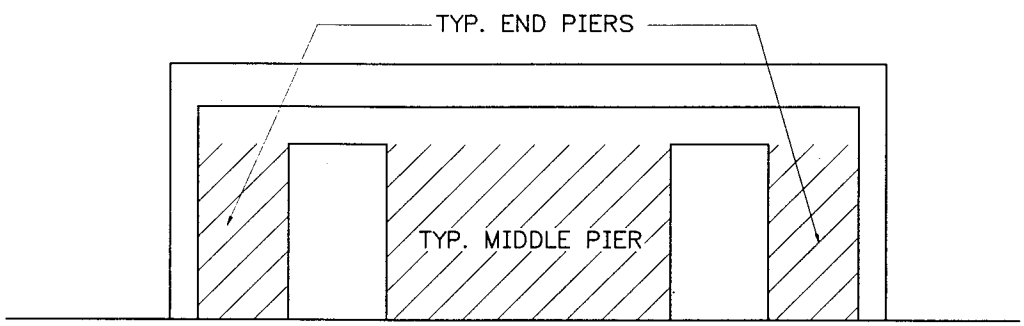

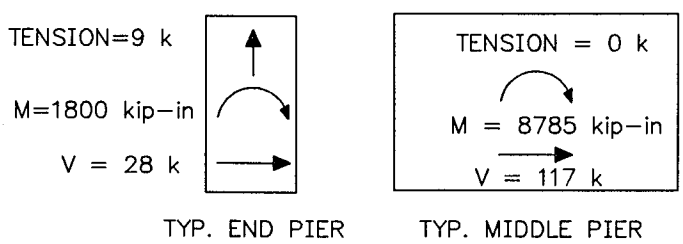

TYPICAL PIERS FOR WALL LINES C & D BELOW MEZZANINE LEVEL

1 kip = 4.448 kN
1 kip-in = 0.113 kN-m

Typical Buttress Wall at Grid Line A:

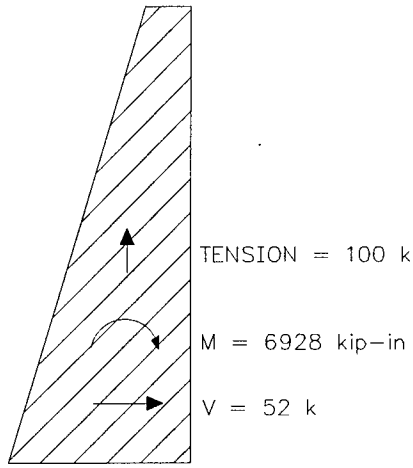

TYPICAL BUTTRESS

1 kip = 4.448 kN
1 kip-in = 0.113 kN-m

Wall Shear Forces:

The wall shear force demand is taken as either the force from the ETABS analysis or the maximum force that can be developed by the wall. If the wall remains elastic in flexure, the shear demand is taken as the force from the ETABS output. If the wall is pushed beyond its elastic limit in flexure, the shear demand is taken as the maximum force that can be developed by the wall. FEMA 273 Section 6.8.2.3 states that the nominal flexural strength of a shear wall or wall segment shall be used to determine the maximum force likely to act in shear walls and wall segments. For cantilever shear walls the design shear force is equal to the magnitude of the lateral force required to develop the nominal flexural strength at the base of the wall, assuming the lateral force is distributed uniformly over the height of the wall. For wall segments, the design shear force is equal to the shear corresponding to the development of the positive and negative nominal moment strengths at opposite ends of the wall segment.

For the determination of the wall flexural strength the yield strength of the longitudinal reinforcement should be taken as 125% of the specified yield strength to account for material overstrength and strain hardening. For all moment strength calculation, the axial load acting on the wall shall be considered.

The P-M interaction diagrams for the wall elements were calculated using the computer program BIAX with f_c' of the shotcrete = 3000 psi and the yield strength of the steel = $1.25f_y$ = 1.25(60ksi) = 75 ksi.

Typical Longitudinal Walls (grid lines 1 and 2):

The longitudinal walls are assumed to act as cantilevers.

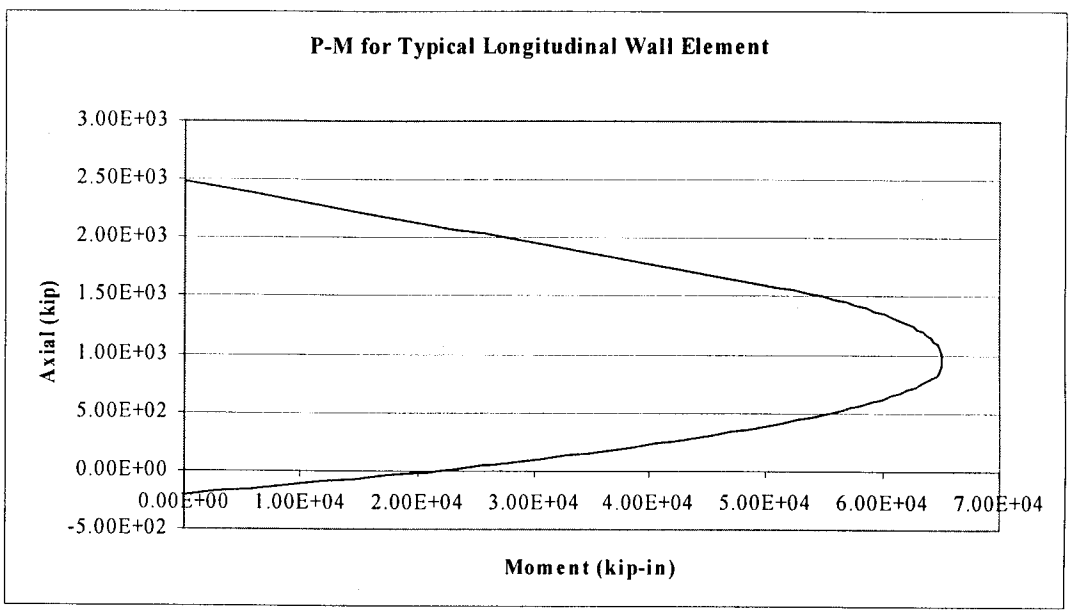

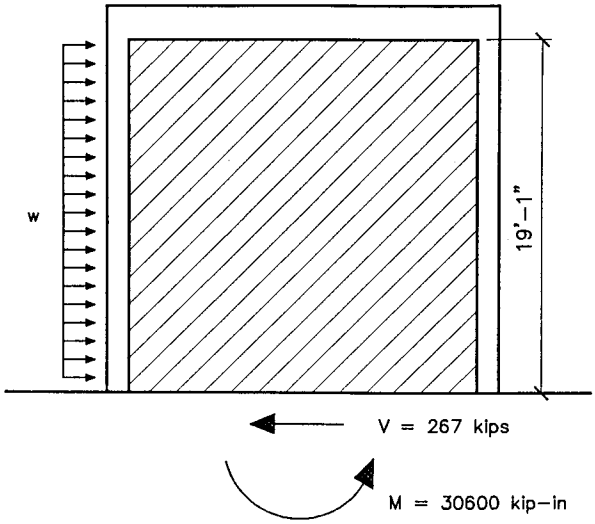

AXIAL COMPRESSION ON WALL SEGMENT = 99 kips

FLEXURAL STRENGTH AT AXIAL LOAD, M = 30600 kip-in

$M = wH^2 / 2$

$w = 2M / H^2$

$V = Hw$

$V = 2M / H$

$V = 2(30600 \text{ kip-in}) / 229" = 267 \text{ kips}$

TYPICAL LONGITUDINAL WALL SEGMENT

Flexural shear demand on wall = V = 267 kips (1188 kN)

Wall Line D, Panel Above Mezzanine Level:

This wall segment is assumed to act as a cantilever.

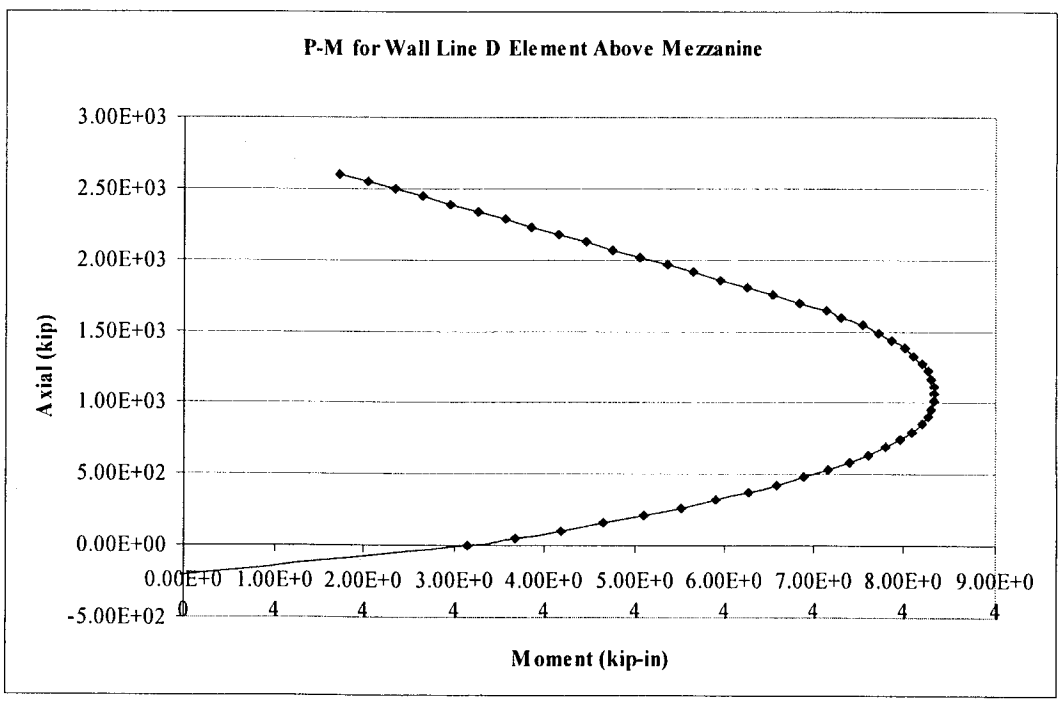

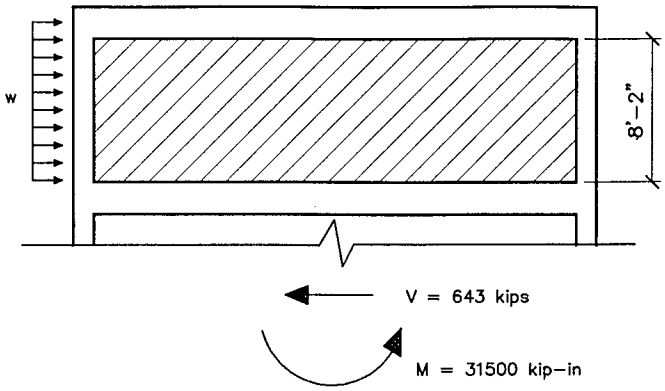

AXIAL LOAD ON WALL = 0 kips

MOMENT STRENGTH, M = 31500 kip-in

$M = wH^2 / 2$

$w = 2M / H^2$

$V = Hw$

$V = 2M / H$

$V = 2(31500 \text{ kip-in})/98" = 643 \text{ kips}$

WALL LINE D, PANEL ABOVE MEZZANINE LEVEL

Flexural shear demand on wall = V = 643 kips (2860 kN)

Wall Lines C & D; Typical Panels Below the Mezzanine Level:

Wall lines C and D below the mezzanine level consist of two narrow end piers and a larger pier in the middle of the wall. Each of the piers is assumed to act as a fixed-fixed wall element.

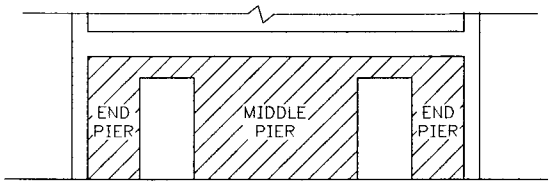

WALL LINES C & D BELOW MEZZANINE LEVEL

Typical Middle Pier:

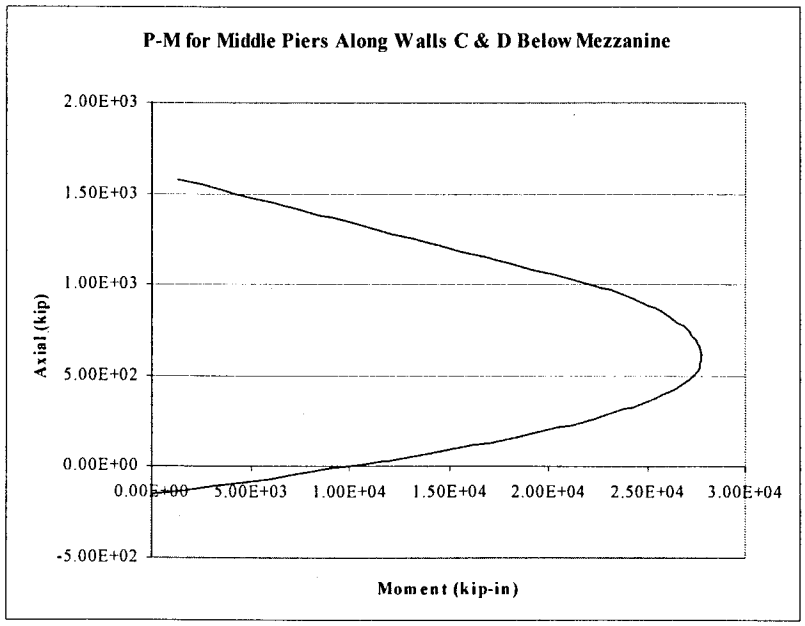

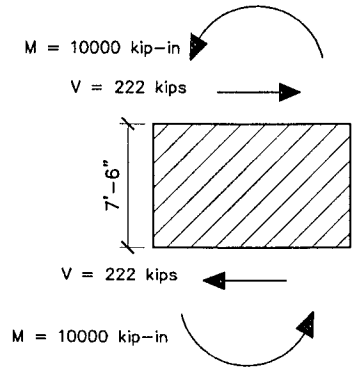

AXIAL LOAD ON WALL = 0 kips

MOMENT STRENGTH, M = 10000 kip–in

V = 2M / H

V = 2(10000 kip–in)/90" = 222 kips

MIDDLE PIER

Q_{UD} = 222 kips (987 kN)

Typical End Pier:

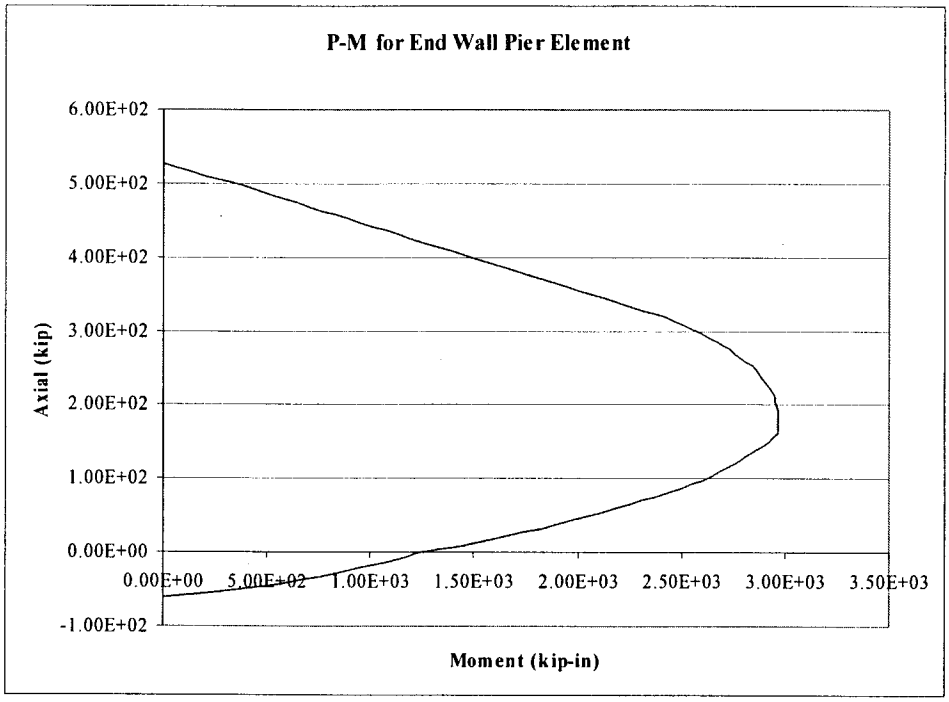

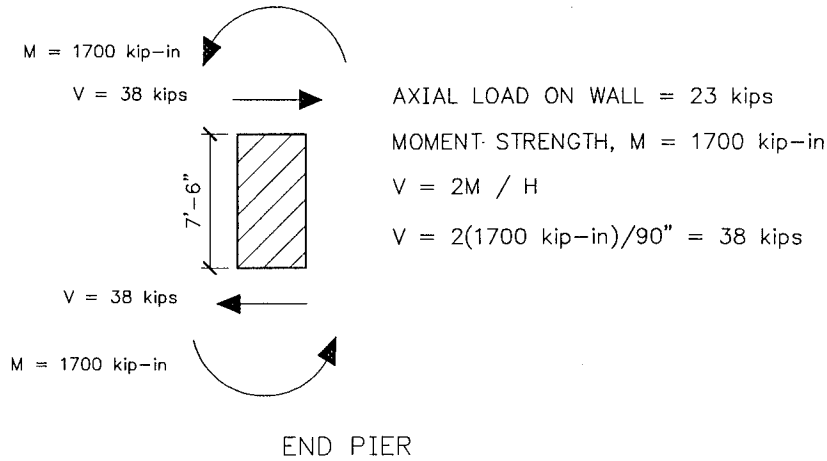

Q_{UF} = V = 38 kips (169 kN)

Typical New Buttress Walls:

The buttress walls are assumed to act as cantilevers.

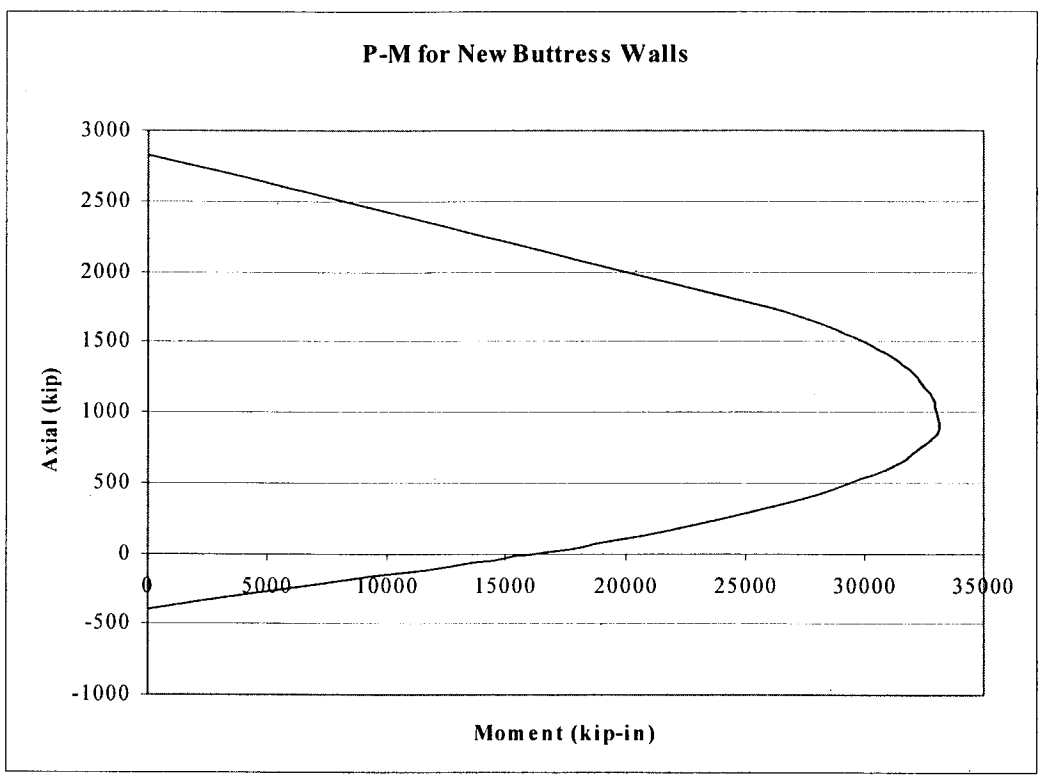

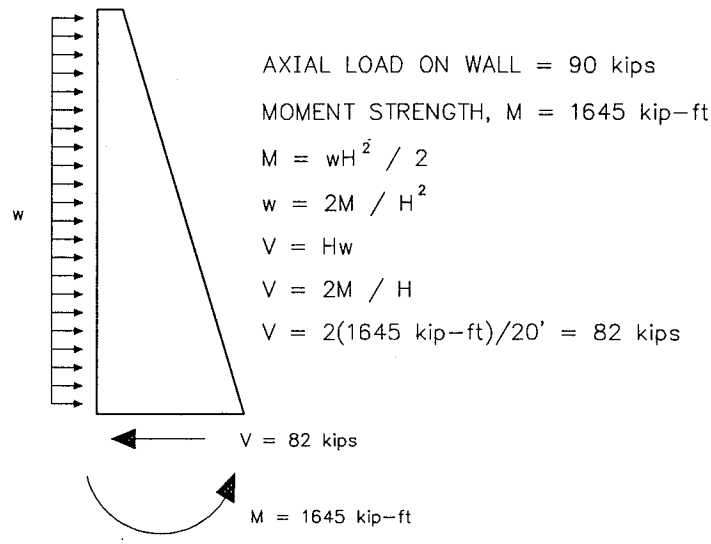

NEW BUTTRESS WALLS

Flexural shear demand on wall = V = 82 kips (365 kN)

Beam Flexural Forces:

Transverse Beams:
The transverse beams all have the same dimensions and reinforcement. The maximum forces along the transverse beams are:

Ends of beams:
Maximum positive moment demand = 977 kip-in (110 kN-m)
Maximum negative moment demand = 1929 kip-in (218 kN-m)

Midpoint of beams:
Maximum positive moment demand = 1021 kip-in (115 kN-m)
Maximum negative moment demand = 821 kip-in (93 kN-m)

Maximum shear demand = 36 kips (160 kN)

Longitudinal Beams:

The longitudinal beams all have the same dimensions and reinforcement. The maximum forces along the longitudinal beams are:

Ends of beams:
Maximum positive moment demand = No positive moments at beam ends
Maximum negative moment demand = 128 kip-in (14 kN-m)

Midpoint of beams:
Maximum positive moment demand = 72 kip-in (8.1 kN-m)
Maximum negative moment demand = No negative moments at beam midspan

Maximum shear demand = 3 kips (13.3 kN)

Column Flexural Forces

The columns resist forces in both the transverse and longitudinal directions. The flexural strength of the columns is a function of the axial load present due to axial-moment interaction. Therefore, the column with the highest flexural demands may not be the most critical due to the axial load present. Only the forces on the most critical column is shown for the check of acceptance for flexure (columns located along grid line C are the most critical).

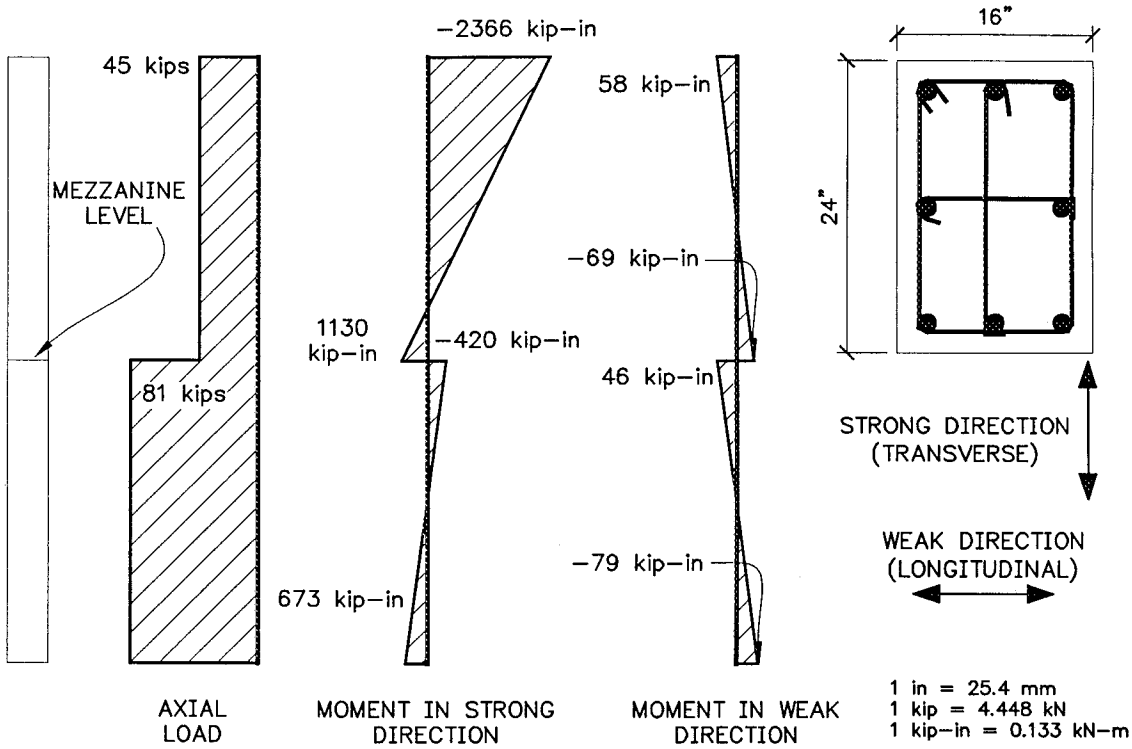

COLUMN AXIAL AND MOMENT DIAGRAMS

Force-Controlled Components

The force-controlled actions consist of column, beam and diaphragm shear. The design actions Q_{UF} are taken as either the maximum action that can be developed in a component considering the nonlinear behavior of the building or the value calculated according to:

$$Q_{UF} = Q_G \pm \frac{Q_E}{C_1 C_2 C_3} \qquad \text{(FEMA 273 Eq. 3-16)}$$

Beam Shear Forces:

The beam shear and moment demands were listed earlier in the deformation-controlled components section. The beams in both the longitudinal and transverse directions do not develop flexural hinges when subjected to the design earthquake forces. Therefore, their shear demand is calculated using FEMA 273 Eq. 3-16 for force-controlled components. To be conservative, the Q_E term in equation 3-16 is not divided by the 'C' factors.

Typical Transverse Beam:

Q_{UF} = 36 kips (160 kN)

Typical Longitudinal Beam:

Q_{UF} = 3 kips (13.3 kN)

Column Shear Forces:

The columns resist shear forces in both the longitudinal and transverse direction. In the longitudinal direction (the column weak direction) the shear wall panels resist essentially all of the shear force. Therefore, the columns are checked for shear in their strong direction only (transverse direction).

All of the columns have the same dimensions and reinforcement details so only the one with the highest shear force is checked. The maximum shear force (determined from equation 3-16) occurs in the columns along grid line 3 above the mezzanine level.

Q_{UF} = 36 kips (160 kN)

Diaphragm Shear Forces:

Roof diaphragm:

Transverse Direction: The highest diaphragm shear for seismic forces in the transverse direction occurs along wall line D due to the high stiffness of the wall. The diaphragm must transfer 222 kips into wall line D.

V = 222 kips (987 kN)
L = 31'
Q_{CE} = 222 kips / 31' = 7.2 klf

$$Q_{UF} = Q_G \pm \frac{Q_E}{C_1C_2C_3} = Q_{UF} = \frac{7.2\,\text{klf}}{(1.4)(1.0)(1.0)} = 5.1\,\text{klf (74 kN / m)}$$

Longitudinal Direction:

V = 205 kips (from ETABS output)
L = 60'
Q_{CE} = 205 kips / 60' = 3.4 klf

$$Q_{UF} = \frac{3.4\,\text{klf}}{(1.4)(1.0)(1.0)} = 2.4\,\text{klf (35.0 kN / m)}$$

Mezzanine diaphragm:

Transverse Direction:

V = 161 kips (from ETABS output)
L = 31'
Q_{CE} = 161 kips / 31' = 5.2 klf

$$Q_{UF} = \frac{5.2\,\text{klf}}{(1.4)(1.0)(1.0)} = 3.7\,\text{klf (54 kN / m)}$$

Longitudinal Direction:

V = 75 kips (from ETABS output)
L = 20'
Q_{CE} = 75 kips / 20' = 3.75 klf

$$Q_{UF} = \frac{3.75\,\text{klf}}{(1.4)(1.0)(1.0)} = 2.68\,\text{klf (39.1 kN / m)}$$

b. Acceptance criteria

Deformation-Controlled Components

Deformation-controlled actions in primary components and elements must satisfy:

$$mQ_{CE} \geq Q_{UD} \qquad \text{(Eq. 7-2)}$$

Wall Flexural and Shear Forces:

The expected flexural strength of the walls was determined using the computer program BIAX. Per FEMA 273 Section 6.8.2.3, the yield strength of the longitudinal reinforcement is taken as 125% of the specified yield strength to account for material overstrength and strain hardening. The strength of the wall is based on the new shotcrete and reinforcement only; contribution to the strength by the original masonry is neglected.

Typical Longitudinal Walls (grid lines 1 and 2):

Determine if wall is flexure or shear-controlled:

$$V_n = A_{CV}\left(\alpha_c\sqrt{f_c'} + \rho_n f_y\right) \qquad \text{(ACI 318 Eq. 21-7)}$$

h / l for the wall = 229" / 226" = 1.01 < 1.5, α = 3.0

$$V_n = (226"\text{x}4")\left(3.0\sqrt{3000\,\text{psi}} + 0.0028(60000\,\text{psi})\right) = 300\,\text{kips}$$

V_n = 300 kips > Flexural shear demand = 267 kips (determined previously), therefore the wall is flexure-controlled.

Flexure:
Q_{CE} = 9400 kip-in (at an axial tension load of 119 kips)
Q_{UD} = 7923 kip-in (895 kN-m)
m = 2.0 (TI 809-04 Table 7-2)
mQ_{CE} = (2.0)(9400 kip-in) = 18800 kip-in (2124 kN-m) > 7923 kip-in (895 kN-m), OK

The wall panels will not yield in flexure (9400 kip-in > 7923 kip-in), therefore the shear demand is taken as the force from the ETABS analysis.

Shear:
Shear, $V = Q_{UD}$ =103 kips
$Q_{CE} = V_n$ = 300 kips (1334 kN)
mQ_{CE} = (2.0)(300 kips) = 600 kips (2669 kN) > 103 kips (458 kN), OK

Wall Line D, Panel Above Mezzanine Level:

Determine if wall is flexure or shear-controlled:

$$V_n = A_{CV}\left(\alpha_c\sqrt{f_c'} + \rho_n f_y\right) \qquad \text{(ACI 318 Eq. 21-7)}$$

h / l for the wall = 98" / 336" = 0.29 < 1.5, $\alpha = 3.0$

$$V_n = (336"\text{x}4")\left(3.0\sqrt{3000\,\text{psi}} + 0.0028(60000\,\text{psi})\right) = 447\,\text{kips}$$

V_n = 447 kips < Flexural shear demand = 643 kips, therefore the wall is shear-controlled

Flexure:
Q_{CE} = 31500 kip-in (3560 kN-m)
Q_{UD} = 17811 kip-in (2013 kN-m)
m = 2.0 (TI 809-04 Table 7-3)
mQ_{CE} = (2.0)(31500 kip-in) = 63000 kip-in (7119 kN-m) > 17811kip-in (2013 kN-m), OK

The wall panels will not yield in flexure (31500 kip-in > 17811 kip-in), therefore the shear demand is taken as the force from the ETABS analysis.

Shear:
Shear, $V = Q_{UD}$ = 222 kips
$Q_{CE} = V_n$ = 447 kips
mQ_{CE} = (2.0)(447 kips) = 894 kips(3977 kN) > 222 kips (987 kN), OK

Wall Lines C & D; Typical Panels Below the Mezzanine Level:

Typical Middle Pier:

Determine if wall is flexure or shear-controlled:

$$V_n = A_{CV}\left(\alpha_c\sqrt{f_c'} + \rho_n f_y\right) \qquad \text{(ACI 318 Eq. 21-7)}$$

h / l for the wall = 90" / 144" = 0.63 < 1.5, $\alpha = 3.0$

$$V_n = (144"\text{x}4")\left(3.0\sqrt{3000\,\text{psi}} + 0.0028(60000\,\text{psi})\right) = 191\,\text{kips}$$

V_n = 191 kips < Flexural shear demand = 222 kips (determined previously), therefore the wall is shear-controlled.

Flexure:
Q_{CE} = 10000 kip-in (at an axial load of 0 kips)
Q_{UD} = 8785 kip-in (determined previously)
m = 2.0 (TI 809-04 Table 7-3)
mQ_{CE} = (2.0)(10000 kip-in) = 20000 kip-in (2260 kN-m) > 8785 kip-in (993 kN-m), OK

The wall panels will not yield in flexure (10000 kip-in > 8785 kip-in), therefore the shear demand is taken as the force from the ETABS analysis.

Shear:
Shear, $V = Q_{UD} = 117$ kips
$Q_{CE} = V_n = 191$ kips
$mQ_{CE} = (2.0)(191 \text{ kips}) = 382$ kips (1699 kN) > 117 kips (520 kN), OK

Typical End Pier:

Determine if wall is flexure or shear-controlled:

$$V_n = A_{CV}\left(\alpha_c\sqrt{f_c'} + \rho_n f_y\right) \qquad \text{(ACI 318 Eq. 21-7)}$$

h / l for the wall = 90" / 46" = 1.95 > 1.5 but less than 2.0, $\alpha = 2.0$

$$V_n = (46"\text{x}4")\left(2.0\sqrt{3000\,\text{psi}} + 0.0028(60000\,\text{psi})\right) = 51\,\text{kips}$$

$V_n = 51$ kips > Flexural shear demand = 38 kips (determined previously), therefore the wall is flexure-controlled.

Flexure:
$Q_{CE} = 1075$ kip-in (at an axial tension load of 9 kips)
$Q_{UD} = 1800$ kip-in (determined previously)
$m = 2.0$ (TI 809-04 Table 7-2)
$mQ_{CE} = (2.0)(1075 \text{ kip-in}) = 2150$ kip-in (243 kN-m) > 1800 kip-in (203 kN-m), OK

The wall panels will yield in flexure (1075 kip-in < 1800 kip-in), therefore the shear demand is taken as the shear force corresponding to the development of the wall-pier flexural capacity.

Shear:
Shear, V = Flexural shear capacity = 38 kips
$Q_{CE} = V_n = 51$ kips
$mQ_{CE} = (2.0)(51 \text{ kips}) = 102$ kips (454 kN) > 38 kips (169 kN), OK

New Buttress Walls:
A check of the new buttress walls is shown for forces at the base of the wall:

Determine if wall is flexure or shear-controlled: (use shear strength at top of wall to be conservative)

$$V_n = A_{CV}\left(\alpha_c\sqrt{f_c'} + \rho_n f_y\right) \qquad \text{(ACI 318 Eq. 21-7)}$$

h / l for the wall = 240" / 96" = 2.5 > 2.0, $\alpha = 2.0$

$$V_n = (24"\text{x}10")\left(2.0\sqrt{3000\,\text{psi}} + 0.0049(60000\,\text{psi})\right) = 97\,\text{kips}$$ (431 kN) at top of wall

$V_n = 97$ kips > Flexural shear demand = 82 kips (determined previously), therefore the wall is flexure-controlled.

Flexure:
$Q_{UD} = 6928$ kip-in (783 kN-m)
$Q_{CE} = 12500$ kip-in (1413 kN-m) (at an axial tension load of 100 kips)
$m = 2.0$ (TI 809-04 Table 7-2)
$mQ_{CE} = (2.0)(12500 \text{ kip-in}) = 25000$ kip-in (2825 kN-m) > 6928 kip-in (783 kN-m), OK

Shear:
Shear, V = Flexural shear capacity = 82 kips (365 kN)
$Q_{CE} = V_n = 97$ kips (431 kN)
$mQ_{CE} = (2.0)(97 \text{ kips}) = 194$ kips (863 kN) > 82 kips (365 kN), OK

Beam Flexure:

Transverse Beams:

At beam ends; $Q_{UD}^+ = 977$ kip-in (110 kN-m) (largest positive moment demand)
$Q_{UD}^- = 1929$ kip-in (218 kN-m) (largest negative moment demand)
$M_{CE}^+ = 1452$ kip-in (164 kN-m), $M_{CE}^- = 3444$ kip-in (389 kN-m)

m = 2.0 (from TI 809-04 Table 7-14)
$mQ_{CE}^+ = (2.0)(1452 \text{ kip-in}) = 2904$ kip-in (328 kN-m) > 977 kip-in (110 kN-m), OK
$mQ_{CE}^- = (2.0)(3444 \text{ kip-in}) = 6888$ kip-in (9340 kN-m) > 1929 kip-in (218 kN-m), OK

At midspan; $Q_{UD}^+ = 1021$ kip-in (115 kN-m) (largest positive moment demand)
$Q_{UD}^- = 821$ kip-in (93 kN-m) (largest negative moment demand)
$M_{CE}^+ = 2797$ kip-in (316 kN-m), $M_{CE}^- = 2124$ kip-in (240 kN-m)

m = 2.0 (from TI 809-04 Table 7-14)
$mQ_{CE}^+ = (2.0)(2797 \text{ kip-in}) = 5594$ kip-in (632 kN-m) > 1021 kip-in (115 kN-m), OK
$mQ_{CE}^- = (2.0)(2124 \text{ kip-in}) = 4248$ kip-in (480 kN-m) > 821 kip-in (93 kN-m), OK

Longitudinal Beams:

At beam ends; $Q_{UD}^+ =$ No positive moment demands at beam ends
$Q_{UD}^- = 128$ kip-in (14 kN-m) (largest negative moment demand)
$M_{CE}^+ = 324$ kip-in (36.6 kN-m), $M_{CE}^- = 624$ kip-in (70.5 kN-m)
m = 2.0 (from TI 809-04 Table 7-14)
$mQ_{CE}^- = (2.0)(624 \text{ kip-in}) = 1248$ kip-in (141 kN-m) > 128 kip-in (14 kN-m), OK

At midspan; *Flexural demands at midspan are negligible; OK by inspection.*

Column Flexure:

A check of a column along grid line C is shown to illustrate the check of component acceptance. The expected flexural strengths of the column in the strong (x) and weak (y) directions are evaluated at the given axial load. See the evaluation section for the column P-M interaction diagram.

$Q_{UDx} = 2366$ kip-in (267 kN-m)
$Q_{UDy} = 58$ kip-in (6.6 kN-m)
Axial load = 45 kips (200 kN) compression
$Q_{CEx} = 4250$ kip-in (480 kN-m) (at given axial load)
$Q_{CEy} = 2500$ kip-in (283 kN-m) (at given axial load)
m = 2.0 (from TI 809-04 Table 7-15)

$$\left(\frac{Q_{UDx}}{mQ_{CEx}} + \frac{Q_{UDy}}{mQ_{CEy}}\right) = \left(\frac{2366\,\text{kip-in}}{(2.0)(4250\,\text{kip-in})} + \frac{58\,\text{kip-in}}{(2.0)(2500\,\text{kip-in})}\right) = 0.3 < 1.0\text{, OK}$$

Force-Controlled Components

Force-controlled actions in primary components and elements must satisfy:

$$Q_{CN} \geq Q_{UF} \qquad \text{(Eq. 7-3)}$$

Column Shear:

Q_{CN} = 85 kips (378 kN) (Q_{CN} determined in the evaluation section)
Q_{UF} = 36 kips (160 kN), OK
$Q_{CN} > Q_{UF}$, OK

Beam Shear:

(Q_{CN} for the beams determined in the evaluation section)
Transverse beams: Q_{CN} = 60 kips (267 kN) > 36 kips (160 kN),
Longitudinal beams: Q_{CN} = 30 kips (133 kN) > Q_{UF} = 3 kips (13.3 kN), OK

Diaphragm Shear:

The thickness of the diaphragm is different in the longitudinal and transverse directions. In the longitudinal direction, the joist ribs run parallel to the shear forces. The weak link is in between the ribs and is taken equal to the thickness of the slab. The ribs run perpendicular to the transverse direction. The equivalent thickness for transverse shear is taken as a weighted average of the concrete area (see diagram below).

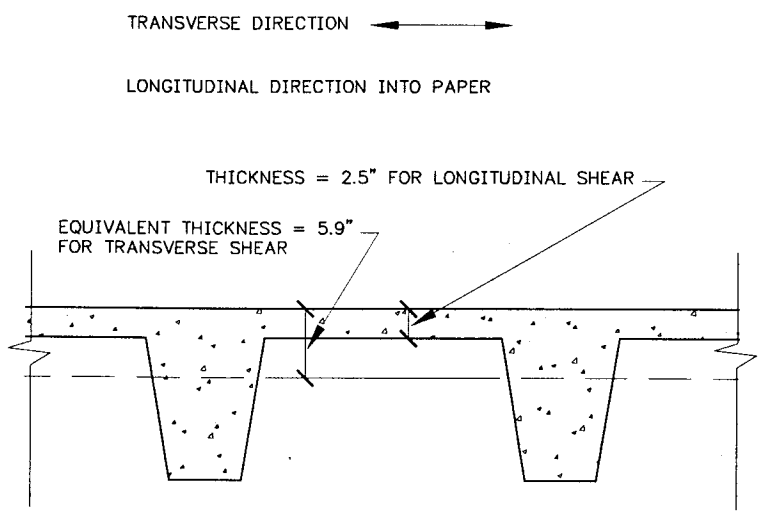

EQUIVALENT THICKNESSES FOR DIAPHRAGM SHEAR

The shear strength of the diaphragm is taken as:

$$V_n = A_{cv}\left(2\sqrt{f_c'} + \rho_n f_y\right) \qquad \text{(ACI 318 Eq. 21-6)}$$

The slabs are reinforced with #3 bars at 18" in both directions. (The contribution to the shear strength by the longitudinal steel at the bottom of the pan joists is neglected.)

Longitudinal Direction: (Check shown for roof level only)

$\rho_n = 0.11 \text{ in.}^2 / (2.5" \times 18") = 0.0024$

$V_n = (2.5" \times \text{length})\left(2\sqrt{3000\,\text{psi}} + (0.0024)(60\,\text{ksi})\right) = 633\,\text{pli} = 7.6\,\text{klf}\ (111\ \text{kN / m})$

$Q_{CN} = 7.6\ \text{klf}\ (111\ \text{kN / m}) > Q_{UF} = 2.4\ \text{klf}\ (35.0\ \text{kN / m})$, OK

Transverse Direction: (Check shown for roof level only)

$\rho_n = 0.11 \text{ in.}^2 / (5.9" \times 18") = 0.001$

$V_n = (5.9" \times \text{length})\left(2\sqrt{3000\,\text{psi}} + (0.001)(60\,\text{ksi})\right) = 1000\,\text{pli} = 12.0\,\text{klf}\ (175\ \text{kN / m})$

$Q_{CN} = 12.0\ \text{klf}\ (175\ \text{kN / m}) > Q_{UF} = 5.1\ \text{klf}\ (74\ \text{kN / m})$, OK

7. *Prepare construction documents:*

Construction documents are not included for this design example.

8. *Quality assurance / quality control:*

QA / QC is not included for this design example.

D5. One-story Steel Frame Building

a. *Description:*
This building is typical of steel frame buildings constructed before 1960 with shop-riveted and field-bolted (ASTM 307) connections. The building has moment connections in the exterior longitudinal frames and single angle bracing (tension only) in the exterior transverse frames. The exterior frame elevations are shown in Figure D5-1, and the roof framing plan, typical bracing and moment connections are shown in Figures D5-2, D5-3 and D5-4. The roof diaphragm is bare steel decking and the walls are insulated metal panels.

b. *Performance Objective:*
This building is assumed to be a Commissary or Post Exchange and is assigned to Service Use Group I with a Life Safety (LS) performance level for S_{DS} = 0.75g.

c. *Analytical procedures:*
It will be assumed that the building was designed in accordance with the provisions for Seismic Zone 3 in the 1952 UBC. Rehabilitation design will be in accordance with this document using LSP analysis.

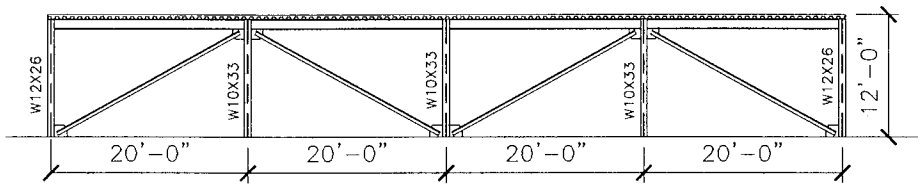

BRACED FRAME

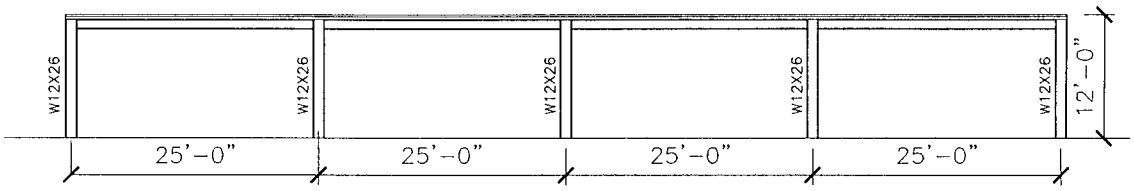

MOMENT FRAME

1 ft = 0.305 m

Figure D5-1: Exterior Frame Elevations

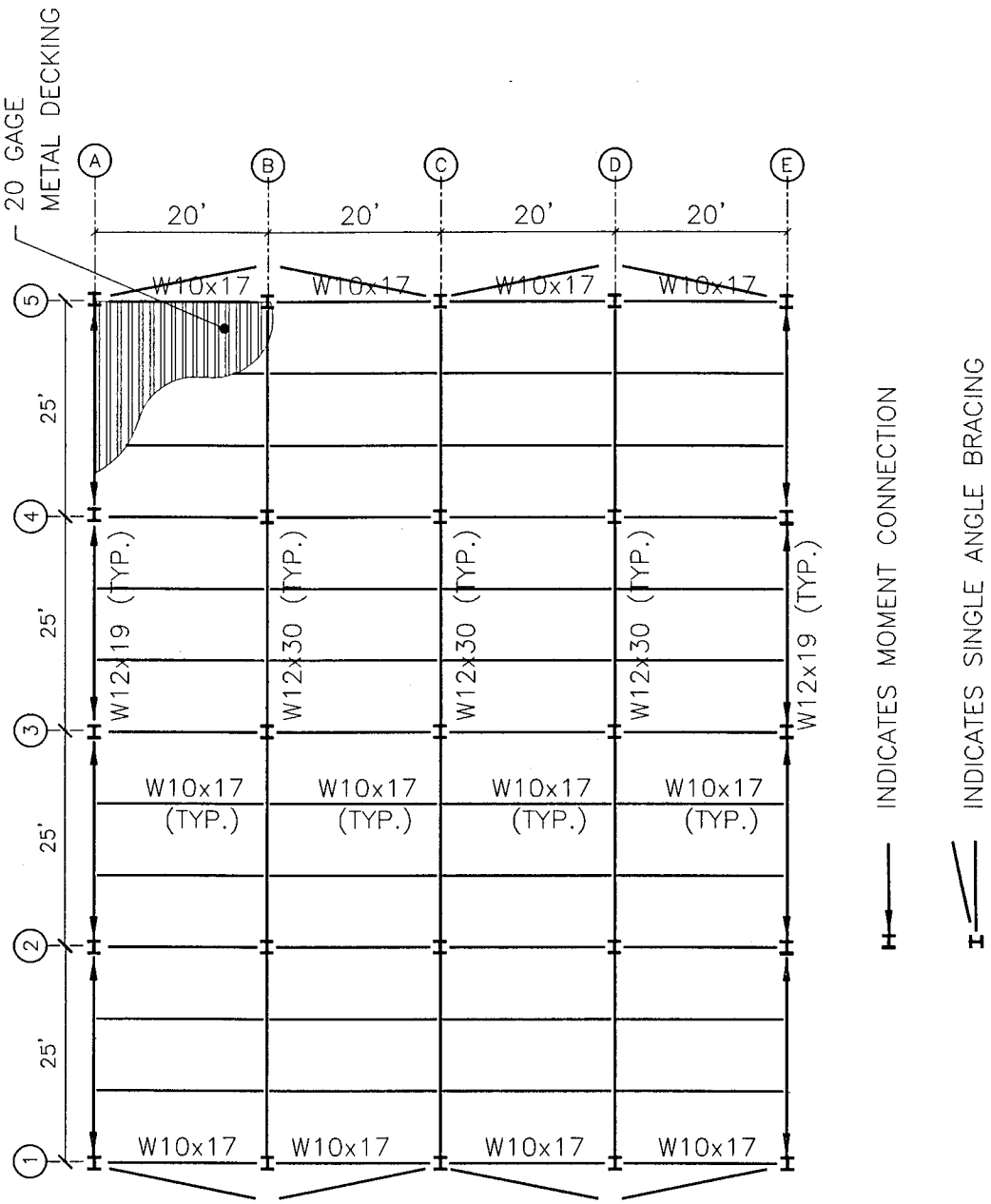

Figure D5-2: Roof Framing Plan

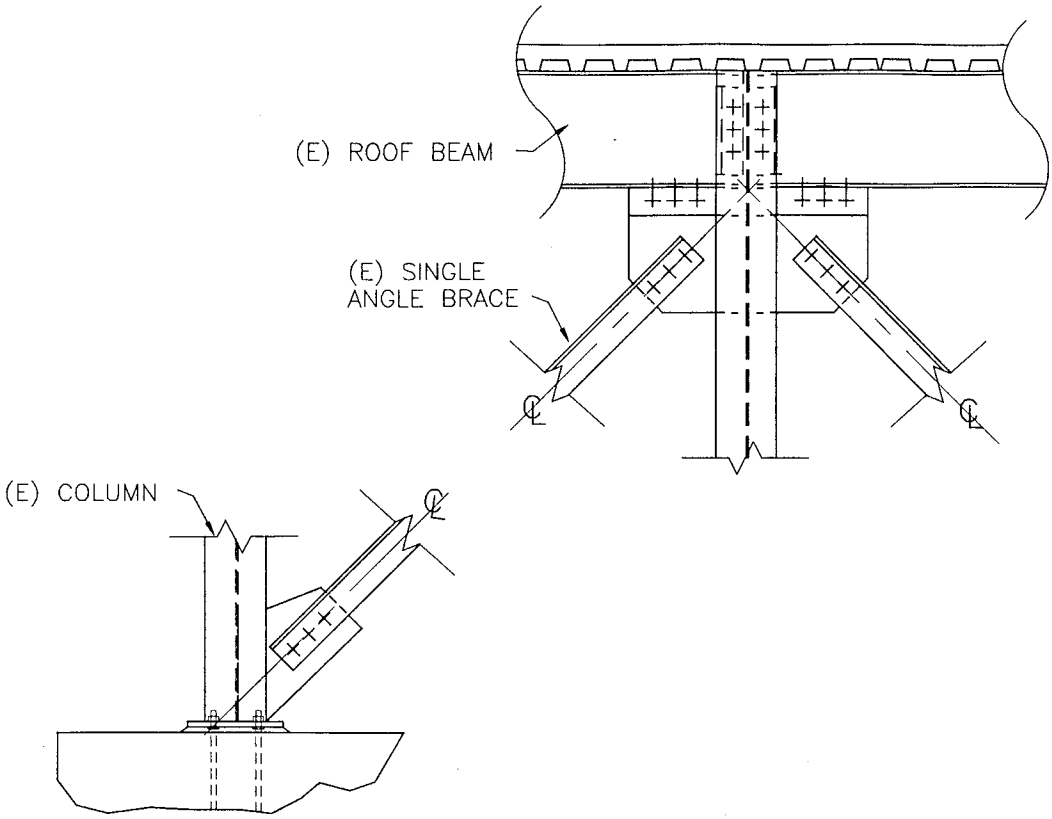

Figure D5-3: Typical Brace Connection

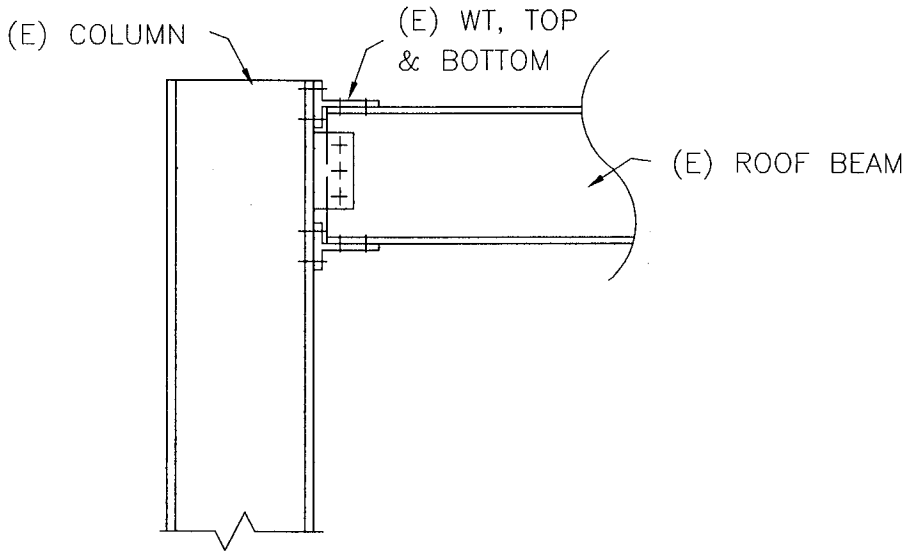

Figure D5-4: Typical Moment Connection

A. Preliminary Determinations (from Table 2-1)

1. Obtain building and site data:

a. Seismic Use Group. The building is designated as a standard occupancy structure within Seismic Use Group I (from Table 2-2).

b. Structural Performance Level. This structure is to be analyzed for the Life Safety Performance Level as described in Table 2-3.

c. Applicable Ground Motions (Performance Objectives). Table 2-4 prescribes a ground motion of 2/3 MCE for the Seismic Use Group I, Life Safety Performance Level. The derivations of the ground motions are described in Chapter 3 of TI 809-04. The spectral accelerations are determined from the MCE maps for the given location.

(1) Determine the short-period and one-second period spectral response accelerations:

$S_S = 1.1$ g	(MCE Map)
$S_1 = 0.44$ g	(MCE Map)

(2) Determine the site response coefficients: A geotechnical report of the building site classifies the soil as Class D (See TI 809-04 Table 3-1). The site response coefficients are determined by interpolation of Tables 3-2a and 3-2b of TI 809-04.

$F_a = 1.06$	(TI 809-04 Table 3-2a)
$F_v = 1.56$	(TI 809-04 Table 3-2b)

(3) Determine the adjusted MCE spectral response accelerations:

$S_{MS} = F_aS_S = (1.03)(1.1) = 1.125$	(TI 809-04 Eq. 3-1)
$S_{M1} = F_vS_1 = (1.56)(0.44) = 0.686$	(TI 809-04 Eq. 3-2)
$S_{MS} \leq 1.5F_a = (1.5)(1.06) = 1.59 > 1.166$, use 1.166	(TI 809-04 Eq. 3-5)
$S_{M1} \leq 0.6F_v = (0.6)(1.56) = 0.936 > 0.686$, use 0.686	(TI 809-04 Eq. 3-6)

(4) Determine the design spectral response accelerations:

$S_{DS} = 2/3\ S_{MS} = (2/3)(1.166) = 0.78$	(TI 809-04 Eq. 3-3)
$S_{D1} = 2/3\ S_{M1} = (2/3)(0.686) = 0.457$	(TI 809-04 Eq. 3-4)

Enter FEMA 310 Table 2-1 with these values to determine the region of seismicity (this information is needed when completing the FEMA 310 checklists). It is determined that the site is in a region of high seismicity.

d. Determine seismic design category:

Seismic design category: D (based on S_{DS})	(Table 2-5a)
Seismic design category: D (based on S_{D1})	(Table 2-5b)

2. Screen for geologic hazards and foundations. Screening for hazards was performed in accordance with Paragraph F-3 of Appendix F in TI 809-04. It was determined that no hazards existed. Table 4-3 of this document requires that the geologic site hazard and foundation checklists contained in FEMA 310 be completed. See Section C, Structural Screening (Tier 1), for the completed checklist.

3. Evaluate geologic hazards. Not necessary.

4. Mitigate geologic hazards. Not Necessary.

B. Preliminary Structural Assessment (from Table 4-1)

At this point, after reviewing the drawings and conducting an on-site visual inspection of the building a judgmental decision is made as to whether the building definitely requires rehabilitation without further evaluation or whether further evaluation might indicate that the building can be considered to be acceptable without rehabilitation.

1. Determine if building definitely needs rehabilitation without further evaluation. It is not obvious if the building definitely needs rehabilitation or not. There is a continuous load path and no obvious signs of structural distress. The building must be evaluated to determine if it is acceptable or if it needs rehabilitation.

2. Determine evaluation level required. Paragraph 4-2.a. requires that a Tier 1 evaluation (screening) be performed for all buildings in Seismic Use Group I. If deficiencies are found a Tier 2 or Tier 3 evaluation will determine if the building is acceptable or needs rehabilitation.

C. Structural Screening (Tier 1) (from Table 4-2)

1. Determine applicable checklists. Table 4-3 lists the required checklists for a Tier 1 evaluation based on Seismic Design Category. Seismic design category D buildings require completion of the Basic Structural, Supplemental Structural, Geologic Site Hazard & Foundation, Basic Nonstructural and Supplemental Nonstructural checklists. (Note: A nonstructural evaluation is not in the scope of this design example).

2. Complete applicable checklists. The Basic Structural, Supplemental Structural, and the Geologic Site Hazard & Foundation checklists were completed and non-compliant results were obtained.

D. Preliminary Nonstructural Assessment (Nonstructural components not considered in this example)

E. Nonstructural Screening (Tier1) (Nonstructural components not considered in this example)

F. Structural Evaluation (Tier 2) (from Table 5-1)

1. Select appropriate analytical procedure. The building is analyzed using the linear static procedure described in Section 4.2.2 of FEMA 310 for ease of calculations. Limitations on the use of this procedure are found in paragraph 5-2 of TI 809-04.

2. Determine applicable ground motion. For Seismic Use Group I and the Life Safety Performance Level the ground motion specified in Table 2-4 is 2/3 MCE.

3. Perform structural analysis. The steps required for the LSP are laid out in Section 4.2.2.1 of FEMA 310.

The moment frames were analyzed to check if the columns have enough capacity to resist the additional demand force due to seismic loading based on 0.75g (calculations are not shown). The results concluded that the moment frame columns are overstressed by a factor of 3. Furthermore, the tension-only braces as well as their connections were also checked for the additional seismic demand force, and were found to be deficient. Rehabilitation of the lateral-force-resisting systems in both directions is recommended.

G. Structural Evaluation (Tier 3)

A Tier 3 is not completed as it would only show that the lateral-force-resisting system is deficient as was shown in the Tier 2 evaluation.

H. Nonstructural Evaluation (Tier 2) (Nonstructural components not considered in this example)

I. Final Assessment (from Table 6-1)

1. Structural evaluation assessment

- *Quantitative:* Deficiencies in the lateral-force-resisting system components have been identified and quantified (see the evaluation results completed for Step F above (Structural Evaluation Tier 2).

- *Qualitative:* The building is a serious life safety hazard and rehabilitation is feasible. The structure contains adequate load paths, however, the lateral-force-resisting frames require strengthening.

2. Structural rehabilitation strategy:

The building has braced frames in the transverse direction and moment frames in the longitudinal direction to resist lateral forces. In the transverse direction; the single angle braces and their riveted connections do not have the capacity to transfer the seismic demand forces from the roof diaphragm to the foundation. It is suggested that the angle braces be replaced with structural tube members that work in tension and compression. The connections are strengthened by removing the existing bolted gusset plates and replacing them with new welded ones. In the longitudinal direction; the moment connections and the columns were found to be deficient. The frames are strengthened by converting the moment frames to braced frames by adding chevron braces to all bays to allow for openings in the exterior walls.

3. Structural rehabilitation concept

The purpose of the concept is to define the nature and extent of the rehabilitation in sufficient detail to allow the preparation of a preliminary cost estimate. The rehabilitation strategy chosen for this building consists of the replacement of the existing single-angle braces with 8 bays of x-braces and adding 8 bays of chevron braces along the perimeter of the building. Structural tube members, TS4x4x1/4, are used for all bracing members. All riveted connections between the braces and the frame members are replaced with new welded gusset plates. The existing WT-sections at the bottom of beam-column connections are removed to limit the frame action at the connections. To strengthen the chord members along the perimeter of the building, the bolts connecting the frame beams to the columns are replaced with new high strength bolts. Two high strength anchor bolts are added to the base of each frame-column along the perimeter of the building to transfer shear and uplift forces to the footings.

At this point a programming level estimate of material quantities associated with the selected structural rehabilitation concept would be developed.

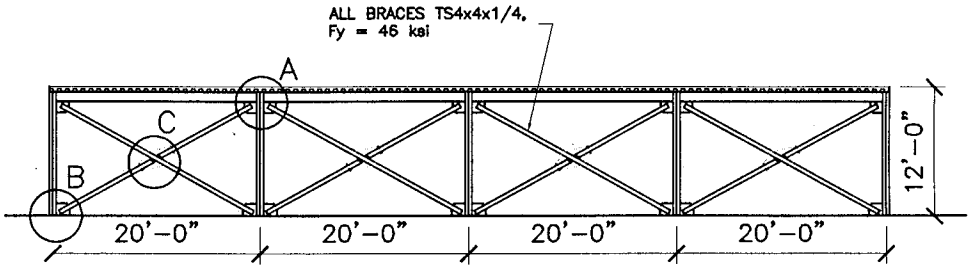

TRANSVERSE X-BRACED FRAME

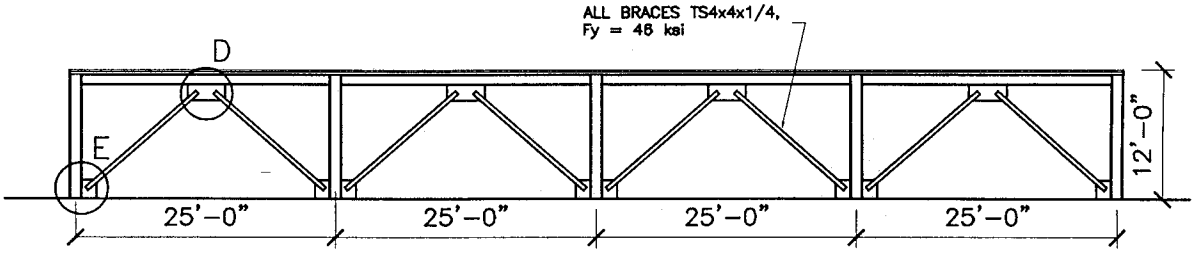

LONGITUDINAL CHEVRON-BRACED FRAME

1 ft = 0.305 m

Figure D5-5: Proposed Rehabilitation Schemes

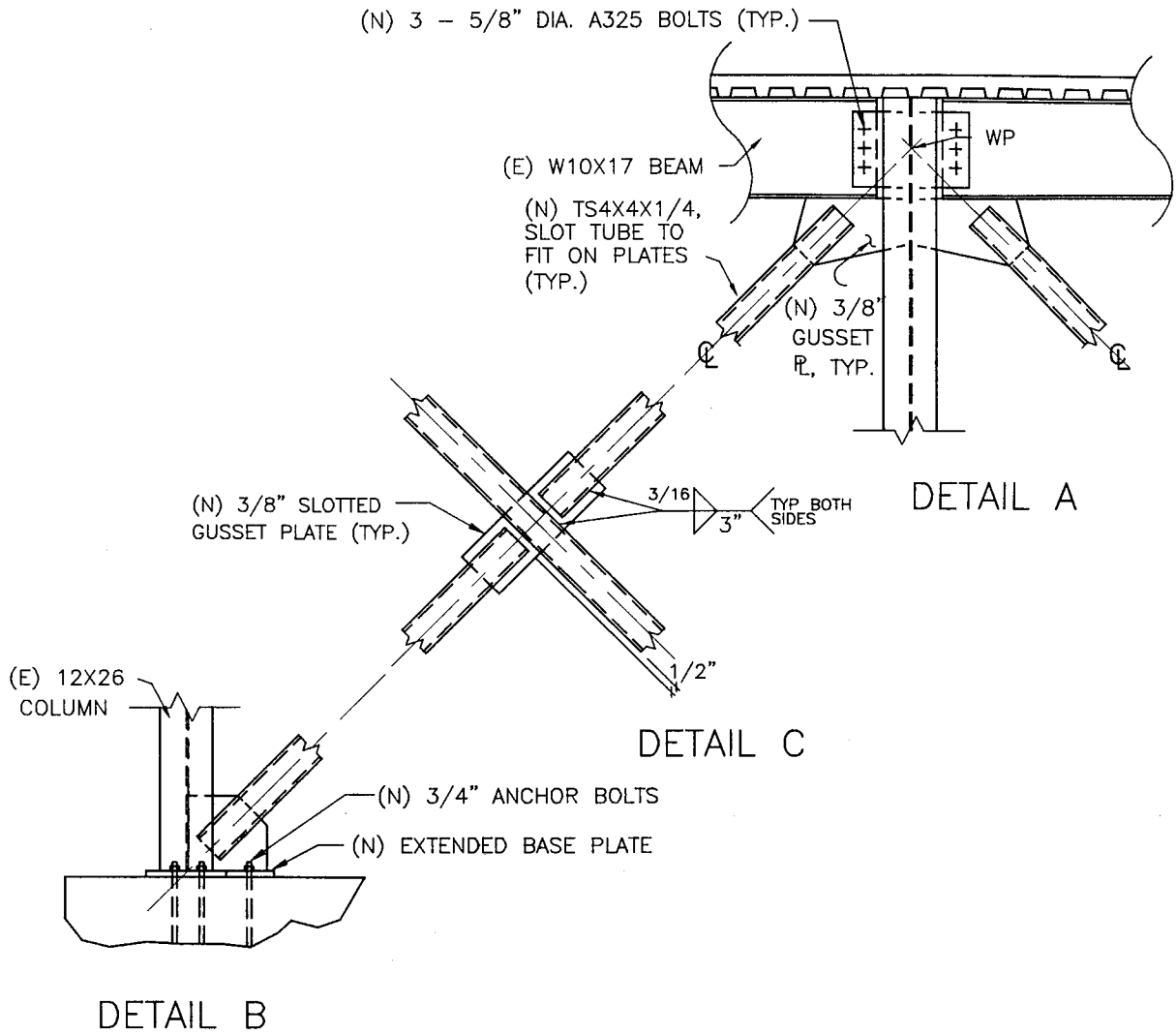

1 in = 25.4 mm

Figure D5-6: Connection Details for X-Braced Frames

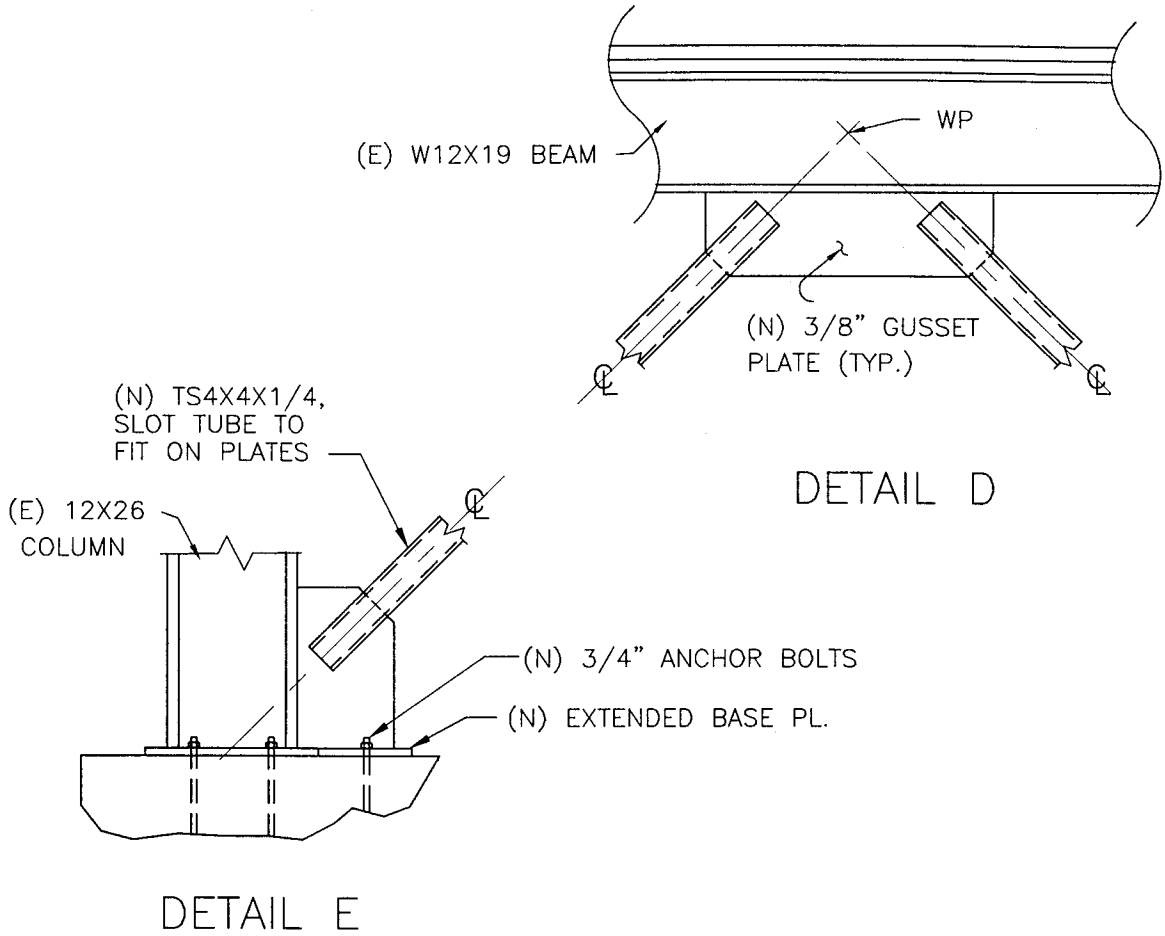

1 in = 25.4 mm

Figure D5-7: Brace Connection Details for Moment Frames

4. *Nonstructural evaluation assessment* (Nonstructural components not considered in this example)

5. *Nonstructural rehabilitation strategy* (Nonstructural components not considered in this example)

6. *Nonstructural rehabilitation concept* (Nonstructural components not considered in this example)

At this point a cost estimating specialist will develop the programming level cost estimate for the project. This estimate will include the structural seismic rehabilitation costs, based on the material quantities developed by the structural evaluator, along with the costs for nonstructural seismic rehabilitation and all other items associated with the building upgrade.

J. Evaluation Report (from Table 6-2)

At this point, an evaluation report would be compiled to summarize the results of the evaluation of structural systems and nonstructural components. An evaluation report is not shown for this design example; however, the items to be included in the report are:

1. *Executive summary*

2. *Descriptive narrative*

   - Building and site data
   - Geologic hazards
   - Structural evaluations
   - Nonstructural evaluations

3. *Appendices*

   - Prior evaluations
   - Available drawings and other construction documents
   - Geotechnical report
   - Structural evaluation data
   - Nonstructural evaluation data

The Evaluation Process is complete.

Seismic Rehabilitation Design (Chapter 7)

K. Rehabilitation (from Table 7-1)

1. Review Evaluation Report and other available data:

The evaluation report completed earlier was reviewed along with the available drawings.

2. Site Visit:

The site was visited during the building evaluation. No further meaningful information could be gathered by another visit.

3. Supplementary analysis of existing building (not necessary):

Supplementary analysis of the existing building is not necessary. The evaluation report contains sufficient detail to commence with the rehabilitation design.

4. Rehabilitation concept selection:

The rehabilitation concept selected for the design example is described above in Step I.

5. & 6. *Rehabilitation design and confirming evaluation:*

These two steps are combined since the design and confirmation is an iterative process. The structure is analyzed with the Linear Static Procedure in accordance with Section 3.3.1 of FEMA 273. Limitations on the use of the procedure are addressed by paragraph 5-2b of TI 809-04 and Section 2.9 of FEMA 273. The seismic demand force on the new frames is based on a new pseudo lateral force per FEMA 273. The new frames are designed and detailed as Ordinary Concentrically Braced Frames (OCBF) according to Section 14 of the AISC'97 "Seismic Provisions for Structural Steel Buildings". Following the design of the braces, the capacities of the existing steel frame elements are checked to make sure they can resist the new demand forces.

Analysis of Structure using the Linear Static Procedure (LSP) (per Section 3.3.1 of FEMA 273)

In the LSP, the building is modeled with linearly-elastic stiffness and equivalent viscous damping that approximate values expected for loading to near the yield point. For this structure 5% viscous damping is assumed. Design earthquake demands for the LSP are represented by static lateral forces whose sum is equal to the pseudo lateral force defined by FEMA 273 Equation 3-6.

- *Determine pseudo lateral load (per FEM 273 Section 3.3.1.3)*

$$V = C_1C_2C_3S_aW \qquad \text{(FEMA 273 Eq. 3-6)}$$

Determination of C_1 factor:

$C_1 = 1.5$ for $T < 0.10$ seconds
$C_1 = 1.0$ for $T \geq T_0$ seconds

The building period, T, and the period associated with the transition from the constant acceleration segment of the spectrum to the constant velocity segment of the spectrum, T_0, are needed to calculate C_1 (see FEMA 273 Section 2.6.1.5 for discussion of T_0).

Building Period (per FEMA 273 Section 3.3.1.2): The building period is determined using Method 2;

$$T = C_t h_n^{3/4} \qquad \text{(FEMA 273 Eq. 3-4)}$$

Longitudinal Direction: ($C_t = 0.02$ for braced frames, $h_n = 12'$)

$T = (0.02)(12')^{3/4} = 0.13$ seconds

Determination of T_0 (per FEMA 273 Section 2.6.1.5)

$$T_0 = (S_{X1}B_S) / (S_{XS}B_1) \qquad \text{(FEMA 273 Eq. 2-10)}$$

For determination of T_0, use S_{D1} (= 0.457) and S_{DS} (= 0.78) determined for the building evaluation for S_{X1} and S_{XS}, respectively.

From FEMA 273 Table 2-15, B_S and $B_1 = 1.0$ for 5% damping

$T_0 = (0.457 \times 1.0) / (0.75 \times 1.0) = 0.61$ seconds
Linearly interpolate to obtain $C_1 = 1.47$

Determination of C_2 factor:
The C_2 factor is determined from FEMA 273 Table 3-1. Linearly interpolate to obtain C_2.

$C_2 = 1.29$ for the Life Safety Performance Level and Framing Type 1.

Determination of C_3 factor:
The C_3 factor is dependent on the stability coefficient, θ, described in FEMA 273 Section 2.11.2. The braced frames are rigid, and therefore, low drifts are expected. The low drifts will lessen the P-Δ effects so it is assumed that the stability coefficient is less than 0.1. This condition is checked later when constructing the mathematical model of the structure.

$C_3 = 1.0$

Determination of S_a:

S_a is the response spectrum acceleration, at the fundamental period and damping ratio of the building in the direction under consideration.. The value of S_a is obtained from the procedure in FEMA 273 Section 2.6.1.5.

T = 0.13 seconds < T_0 = 0.61 seconds, use FEMA 273 Equation 2-8.

For building periods between $0.2T_0 = 0.2(0.61) = 0.122$ and $T_0 = 0.61$ $S_a = S_{XS} / B_1 = 0.75/1.0 = 0.75$ (see FEMA 273 Figure 2-1 for a graphical description of the general response spectrum)

$S_a = 0.75$

Determine Building Seismic Weight:

Roof DL:

Roofing	5.0
Fiberglas Insulation	1.5
Metal Decking	2.0
Steel Framing	2.0
Suspended Ceiling	1.0
Mech., Elec. & Misc.	3.0
	14.5 PSF (694 Pa)

Conservatively use: DL = 20 PSF (292 Pa)
LL = 20 PSF (292 Pa)

Exterior wall weight (Insulated metal panels):

Assume 10 PSF (146 Pa)

	Unit Weight (psf)	Unit Wall Weight (plf)	Total Area (ft.^{2})	Total Wall Length (ft.)	Total Weight (kips)
Roof Diaphragm					
Weight of Roof	20.0	---	8,000	---	160
Exterior Longitudinal Walls	---	60	---	200	12
Exterior Transverse Walls	---	60	---	160	9.6
Partition	10.0		8,000		80
Total Building Seismic Weight @ Roof					***263***

1170 kN

V = (1.47)(1.29)(1.0)(0.75) (263 kips) = 374 kips (1664 kN)

- *Mathematical Modeling Assumptions (per FEMA 273 Section 3.2.2.)*:

- The building has a flexible diaphragm, hence torsional effects are ignored.
- The braced frames are analyzed using a two-dimensional model with RISA-2D software.
- Component Gravity Loads
  The new braces are assumed to carry no gravity loads since the gravity loads are already in place and being resisted by the steel columns.

$Q_G = 1.2\ Q_D + 0.5\ Q_L + 0.2\ Q_S$ (Eq. 7-1)

FEMA 273 Section 3.2.8 states that $Q_S = 0.0$ where the design snow load is less than 30 psf. (Note: Eq. 7-1 is different than FEMA 273 Equation 3-2. This document uses the gravity load combination specified in ASCE 7 rather than the FEMA equation.)

$Q_G = 0.9\ Q_D$ (FEMA 273 Eq. 3-3)

Transverse X-Braced Frames:

Q_D = Dead load
Distributed load on beams = (20.0psf)(8.33'/2) = 83.3 plf (1.22 kN /m)
Point load on end columns = (20.0psf)(25'/2) (20'/2) = 2500 lb. (11.1 kN)
Point load on middle columns = (20.0psf)(25'/2) (20') = 5000 lb. (22.2 kN)

Q_L = Design live load
Distributed load on beams = (20.0psf)(8.33'/2) = 83.3 plf (1.22 kN /m)
Point load on end columns = (20.0psf)(25'/2) (20'/2) = 2500 lb. (11.1 kN)
Point load on middle columns = (20.0psf)(25'/2) (20') = 5000 lb. (22.2 kN)

Q_E = Earthquake load (for each line of framing)

The building has a flexible diaphragm; therefore, the diaphragm seismic force is distributed to the frames per tributary areas. There are only two x-braced frames along the perimeter of the building in the transverse direction, ½ of the diaphragm force goes to each framing line on each side of the building.

$Q_E =$ ½(374 kips) = 187 kips (832 kN)

- P-Δ Effects

Two types of P-Δ effects are considered, static and dynamic.

Static P-Δ effect: For linear procedures, the stability coefficient, θ, should be evaluated using FEMA 273 Eq. 2-14. If the coefficient is less than 0.1, static P-Δ effects will be small and may be ignored.

$$\theta_i = \frac{P_i \delta_i}{V_i h_i}$$ (FEMA 273 Eq.2-14)

The lateral force, V_i, is placed on the frame to determine the structure lateral drift, δ_i. The calculation of the gravity loads, P_i, is shown below. The story height is 12' = 144" (3.66 m) for the one-story structure. The drift (δ_i) was determined by placing the lateral load on a frame-2D computer model described above, and was found to be 0.09" (2.3 mm).

P_i (DL+LL) = (40 psf)(25'/2)/(80') = 40 kips (178 kN)

θ_1 = {(40k)(0.09")}/{(187k)(144")} = 0.000134 < 0.1

Therefore, static P-Δ effect is ignored.

Dynamic P-Δ effect: The dynamic P-Δ effect is indirectly evaluated for the linear procedures by using the coefficient C_3, which has been done in the calculation of the pseudo lateral force.

Longitudinal Chevron-Braced Frames:

Q_D = Dead load
Distributed load on beams = (20.0psf)(20'/2) = 200 plf (2.92 kN / m)

Q_L = Design live load
Distributed load on beams = (20.0psf)(20'/2) = 200 plf (2.92 kN / m)

Q_E = Earthquake load (for each line of framing)

The building has a flexible diaphragm; therefore, the diaphragm seismic force is distributed to the frames per tributary areas. There are only two chevron-braced frames along the perimeter of the building in the longitudinal direction, ½ of the diaphragm force goes to each framing line on each side of the building.

½ of the forces go to each framing line on each side of the building.

Q_E = ½(374 kips) = 187 kips (832 kN)

P-Δ Effects

P_i (DL+LL) = (40 psf)(20'/2)/(100') = 40 kips (178 kN)

θ_1 = {(40k)(0.101")}/{(187k)(144")} = 0.00015 < 0.1

Therefore, static P-Δ effect is ignored.

Design of diagonal braces in X-Braced Frames:

Per paragraph 7-3.a (5) of TI 809-04, structural steel braced frames will conform to the requirements of the AISC "Seismic Provisions for Structural Steel Buildings".

Section 14.5. of the Provisions (Low Buildings) states that, when Load Combinations 4-1 and 4-2 are used to determine the required strength of the members and connections, it is permitted to design the OCBF in buildings two stories or less in height without the special requirements of Sections 14.2 through 14.4.

This building is a one story structure, and the Load Combinations used to determine the component strengths (when considered as force-controlled components) are comparable to Equations 4-1 and 4-2.

Therefore, the braces and their connections are designed based on a force-controlled action, without the requirements of Sections 14.2 through 14.4 in the AISC Seismic Provisions.

The acceptance criteria for force-controlled components is:

$Q_{CN} \geq Q_{UF}$ (Eq. 7-3)

where Q_N is the nominal strength, and is determined from the LRFD specifications (per AISC Seismic Provisions, Sect. 4.2), and Q_{UF} is determined from capacity-limit analysis of the members delivering forces to the element being evaluated or from either FEMA 273 Equation 3-15 or 3-16. Equation 3-16 can always be used. Equation 3-15 may only be used when the forces contributing to Q_{UF} are delivered by yielding components of the seismic framing system.

$$Q_{UF} = Q_G \pm \frac{Q_E}{C_1 C_2 C_3 J}$$ (FEMA 273 Eq. 3-15)

$$Q_{UF} = Q_G \pm \frac{Q_E}{C_1 C_2 C_3}$$ (FEMA 273 Eq. 3-16)

The seismic demand forces in the braces are not delivered by yielding components of the braced frames, hence, Equation 3-16 will be used in this case.

The braces are designed to resist seismic forces only, since the gravity load is already in place and being resisted by the columns. The seismic force along each frame line is resisted by eight brace members that work in tension and compression.

The seismic demand force on one diagonal brace;

$$Q_{UF} = Q_G \pm \frac{Q_E}{C_1 C_2 C_3} = 0 + \{(187 \text{ kips}/8)\text{x}(23.3'/20')\}/(1.47\text{x}1.29\text{x}1.0) = 27.23 \text{ kips} / 1.9 = 15 \text{ kips } (66.7 \text{ kN})$$

Per paragraph 7-3.b (3) of TI 809-04, the effective out-of-plane unbraced length of the brace may be taken as 2/3 of the total length of the brace.

Therefore; KL = (2/3)23.33' = 15.55' x 12 = 187" (4.74 m)

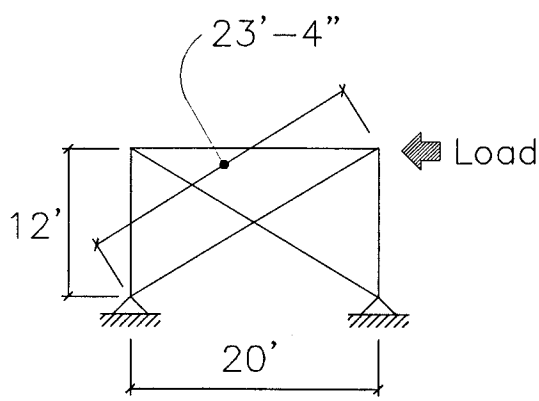

1 ft = 0.305 m

KL/r < 200 (LRFD, Sect. B7., page 6-33)

$r_{required}$ = KL/200 = 187/200 = 0.935 in. (23.7 mm)

From LRFD, page 2-40;

Try a TS 4X4X1/4:

$\phi_c P_n$ = 47 kips (209 kN) For KL =16 ft. (4.88 m)

r = 1.51 in. (38.4 mm)

KL/r = 187"/1.51" = 124 < 200 O.K.

$b/t < \lambda_p = 110/(F_y)^{1/2}$ (AISC Seismic Provisions, Table I-9-1)

$b/t = 4"/0.25" = 16 < 110/(46ksi)^{1/2} = 16.22$ O.K.

$Q_{CN} = P_n$ = 47 kips /ϕ_c = 47 kips / 0.85 = 55 kips (245 kN) > Q_{UF} = 15 kips (66.7 kN) O.K.

Use TS 4X4X1/4

Connections

Weld of brace-to-gusset plate:
Maximum demand force = 15 kips (66.7 kN)

Use E70 welds and 3/8" (9.5 mm) thick gusset plates
Minimum weld size = 3/16" = 0.188" AISC LRFD Table J2.5
Maximum weld size = thickness of welded material minus 1/16" for materials ¼" in thickness or more; the brace has a wall thickness of 0.25". Use a weld size of 3/16" (4.8 mm)

Design strength of weld:
$\phi 0.6(F_{EXX})$ = (1.0)(0.6)(70) = 42 ksi (289 MPa) AISC LRFD Table J2.3
ϕR_n = (42 ksi)(0.707)(3/16")(length) = 5.57 kips / inch (controls)

Design strength of base material (based on tube)
$\phi F_{UBM} A_{BM}$ = (1.0)(0.6)(58)(0.25")(length) = 8.7 kips / inch

Length = 15 kips / (5.57 kips / inch) = 2.7 inch (69 mm)
Use 3/16" fillet welds, 3" (76 mm) long along each edge of tube.

Weld gusset plate to beam and column:
Horizontal component due to the brace tensile force = (20'/23.3') x 15 kips = 13 kips (57.8 kN)
Vertical component due to the brace tensile force = (12'/23.3') x 15 kips = 8 kips (35.6 kN)

Length of 3/16" fillet weld required to connect gusset plate to beam = 13 kips / (5.57 kips / inch) = 2.33 inch
Length of 3/16" fillet weld required to connect gusset plate to column = 8 kips /(5.57 kips / inch) = 1.4 inch

Use 3/16" fillet welds,3" (76 mm) long on each side of gusset plate to connect to beam bottom flange.
Use 3/16" fillet welds,3" (76 mm) long on each side of gusset plate to connect to column web.

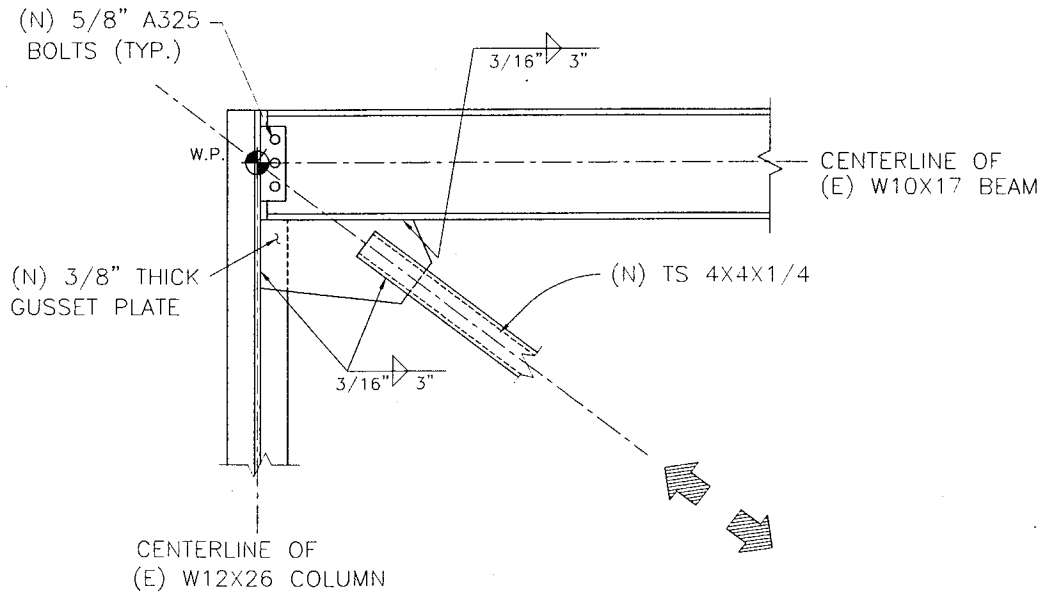

Figure D5-8: Top Connection for X-Braced Frames

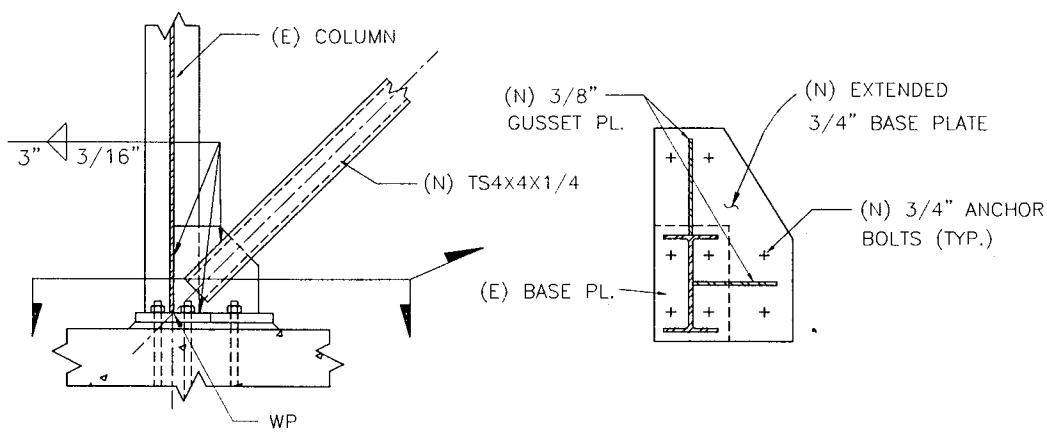

1 in = 25.4 mm

Figure D5-9: Base Connection of X-Braced Frames

Design of braces in Chevron-Braced Frames:

The seismic demand force on one brace;

$$Q_{UF} = Q_G \pm \frac{Q_E}{C_1C_2C_3} = 0 + \{(187\text{ kips}/8)\text{x}(17.3'/12.5')\}/(1.47\text{x}1.29\text{x}1.0) = 32.35\text{ kips}/1.9 = 17\text{ kips (75.6 kN)}$$

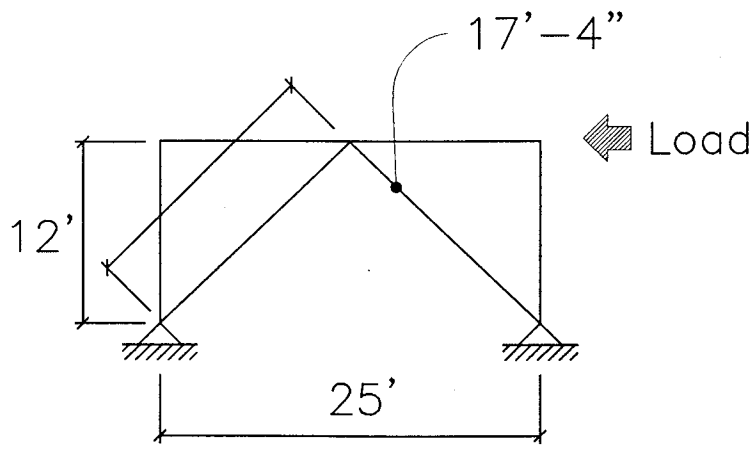

1 ft = 0.305 m

KL = (1.0)(17.3') = 17.3' = 208" (5.28 m)

KL/r < 200 (LRFD, Sect. B7., page 6-33)

$r_{required}$ = KL/200 = 208/200 = 1.04 in. (26.4 mm)

From LRFD, page 2-40;

Try a TS 4X4X1/4:

$\phi_c P_n$ = 40 kips (178 kN) For KL =17.3 ft.

r = 1.51 in.

KL/r = 208"/1.51" = 138 < 200 O.K.

$b/t < \lambda_p = 110/(F_y)^{1/2}$ (AISC Seismic Provisions, Table I-9-1)

$b/t = 4"/0.25" = 16 < 110/(46ksi)^{1/2} = 16.22$ O.K.

$Q_{CN} = P_n$ = 40 kips / ϕ_c = 40 kips / 0.85 = 47 kips (209 kN) > Q_{UF} = 17 kips (75.6 kN) O.K.

Use TS 4X4X1/4

<u>Connections</u>

Weld of brace-to-gusset plate:
Maximum demand force = 20 kips (89 kN)

Use E70 welds and 3/8" (9.5 mm) thick gusset plates

Minimum weld size = 3/16" = 0.188" AISC LRFD Table J2.5
Maximum weld size = thickness of welded material minus 1/16" for materials ¼" in thickness or more; the brace has a wall thickness of 0.25". Use a weld size of 3/16"

Design strength of weld:
$\phi 0.6(F_{EXX}) = (1.0)(0.6)(70) = 42$ ksi AISC LRFD Table J2.3
ϕR_n = (42 ksi)(0.707)(3/16")(length) = 5.57 kips / inch (controls)

Design strength of base material (based on tube)
$\phi F_{UBM} A_{BM}$ = (1.0)(0.6)(58)(0.25")(length) = 8.7 kips / inch

Length = 20 kips / (5.57 kips / inch) = 3.59 inch
Use 3/16" fillet welds, 3" (76.2 mm) long along each edge of tube.

Bottom connection - weld gusset plate to column and base plate:
Horizontal component due to the brace tensile force = (12.5'/17.3') x 20 kips = 15 kips (66.7 kN)
Vertical component due to the brace tensile force = (12'/17.3') x 20 kips = 14 kips (62.3 kN)

Length of 3/16" fillet weld required to connect gusset plate to base plate = 15 kips /(5.57 kips/inch) = 2.69 in.
Length of 3/16" fillet weld required to connect gusset plate to column = 14 kips /(5.57 kips/inch) = 2.51 in.

Use 3/16" fillet welds, 3" (76.2 mm) long on each side of gusset plate to connect to base plate.
Use 3/16" fillet welds, 3" (76.2 mm) long on each side of gusset plate to connect to column flange.

Top connection - weld gusset plate to bottom flange of beam:
Horizontal component due to tension in one brace and compression in the other = 15 kips x 2 = 30 kips (133 kN).

Therefore, use 3/16" fillet welds, 6" (152 mm) long on each side of gusset plate to connect to bottom flange of beam.

Column Capacity Check:

Maximum demand force on columns (from Risa 2-D Model for X-Braced Frames);

P_{max} = 20 kips (89 kN) (corner column)

To account for orthogonal effects 30% of the demand force on the column from the Chevron-Braced Frame analysis is added (P_{max} = 2 kips (8.9 kN))

$P_{max(total)}$ = 20 + 0.3(2) = 21 kips (93 kN)

$$Q_{CN} \geq Q_{UF} \qquad \text{(Eq. 7-3)}$$

$$Q_{UF} = Q_G \pm \frac{Q_E}{C_1 C_2 C_3} \qquad \text{(FEMA 273 Eq. 3-16)}$$

Contribution of 1.2 Q_D +0.5 Q_L = 0.34 k/ft x 25' = 4.25 kips (18.9 kN)

Q_E = 21-4.25 = 16.75 kips (74.5 kN)

$C_1C_2C_3$ = 1.47x1.29x1.0 = 1.9

Q_{UF} = (4.25kips) + (16.75kips/1.9) = 13 kips (57.8 kN)

For W10x33;

KL = 1.0 x 12' = 12';

From LRFD, page 2-27

Q_{CN} = 222 kips (987 kN) > Q_{UF} = 13 kips (57.8 kN) O.K.

Check Column Anchorage to Footing:

Since this is a forced-controlled action, the load combination used in the Risa-2D model to get the maximum demand forces (Q_{UF}) is: $Q_E/(C_1C_2C_3) - 0.9\ Q_G$.

Maximum reactions at column base:

X-braced Frames:
Tension = 12 kips (53.4 kN)
Shear = 12 kips (53.4 kN)

Chevron-braced Frames:
Tension = 19 kips (84.5 kN)
Shear = 21 kips (93.4 kN)

Try 4 – 3/4" (19 mm) dia. A325 anchor bolts with 12" (305 mm) min. embedment length.

Design tensile strength governed by steel, P_s, is:
$P_s = 0.9A_bF_un$ (FEMA302, Eq. 9.2.4.1-1)
$P_s = 0.9 \times 0.4418 \times 120 \times 4 = 191$ kips (850 kN)

Design tensile strength governed by concrete failure, ϕP_c, is:
$\phi P_c = \phi\ \lambda\ (f'c)^{1/2}\ (2.8A_p+4A_t)$ (FEMA302, Eq. 9.2.4.1-3)

Use a depth of 12" minimum for the anchor bolts, and a spacing of 6" and 9" for the group of four.
A_t = 6" x 9" = 54 in^2.
A_p = 2 x {(6"+30")/2 x 12") + (9"+33")/2 x 12")} = 936 in^2.
$\phi P_c = \{1.0 \times 1.0 \times (3{,}000)^{1/2} \times (2.8 \times 936 + 4 \times 54)\} / 1000 = 155$ kips (689 kN) Governs

Design shear strength governed by steel, V_s, is:
$V_s = 0.75A_bF_un$ (FEMA302, Eq. 9.2.4.2-1)
$V_s = 0.75 \times 0.4418 \times 120 \times 6 = 239$ kips (1063 kN) (F_u = 120 ksi, LRFD, Table I-C)

Design shear strength governed by concrete failure, ϕV_c, is:
$\phi V_c = \{\phi\ 800\ A_b\ \lambda\ (f'c)^{1/2}\}\ n$ (FEMA302, Eq. 9.2.4.2-2)
$\phi V_c = \{1.0 \times 800 \times 0.4418 \times 1.0 \times (3{,}000)^{1/2}\} \times 6 / 1000 = 116$ kips (516 kN) Governs

$$(1/\phi)\left(\frac{Pu}{Pc}\right) \le 1.0$$ (FEMA302, Eq. 9.2.4.3-1a)

$$(1/0.8)\left(\frac{19}{155}\right) = 0.18 \le 1.0$$ O.K.

$$(1/\phi)\left(\frac{V_u}{V_c}\right) \leq 1.0$$ (FEMA302, Eq. 9.2.4.3-1b)

$$(1/0.8)\left(\frac{21}{116}\right) = 0.27 \leq 1.0$$ O.K.

$$(1/\phi)\left[\left(\frac{P_u}{P_c}\right)^2 + \left(\frac{V_u}{V_c}\right)^2\right] \leq 1.0$$ (FEMA302, Eq. 9.2.4.3-2a)

$$(1/0.8)\left[\left(\frac{19}{155}\right)^2 + \left(\frac{21}{116}\right)^2\right] = 0.08 \leq 1.0$$ O.K.

$$\left[\left(\frac{P_u}{P_c}\right)^2 + \left(\frac{V_u}{V_c}\right)^2\right] \leq 1.0$$ (FEMA302, Eq. 9.2.4.3-2b)

$$\left[\left(\frac{19}{132}\right)^2 + \left(\frac{21}{99}\right)^2\right] = 0.07 \leq 1.0$$ O.K.

Use 4 - 3/4" (19 mm) dia. A325 anchor bolts at each column base with a minimum 12" (305 mm) embedment length.

Check beams at chevron-braced frames for additional unbalanced moment:

The maximum demand on the beams occurs at the chevron brace connection when buckling of one brace in compression results in unbalanced tensile force from the remaining brace (Chapter 8, Sect. 8-2d). Although the special requirements for Inverted-V-Type Bracing (Chevron Bracing) per The AISC Seismic Provisions, Section 14.4a can be waived for a one-story structure as mentioned earlier, the following calculations are performed for this Example Problem to demonstrate that the existing frame beams have enough capacity to resist an additional unbalanced load when the compression braces buckle. Also, lateral braces for the beam flanges at point of intersection are designed.

This is a deformation-controlled action. Therefore, the acceptance criteria for this components is:

$$mQ_{CE} \geq Q_{UD}$$ (Eq. 7-1)

where:

$$Q_{UD} = Q_G \pm Q_E$$ (FEMA 273 Eq. 3-14)

Maximum demand moment on beams (from Risa 2-D Model with zero axial stiffness for compression braces);

M_{max} = 310 kip-ft (420 kN – m) = Q_{ud}

For W12x19, b_f = 4 in. and t_f = 0.35 in.

$(b_f/2t_f) = 5.7 < (52/\sqrt{F_{ye}}) = 8.7$;

Therefore, m = 6 (from TI 809-04, Table 7-12)

$Q_{ce} = \phi_b M_p = 1.0 \times 74.1 = 74.1$ kip-ft (100 kN – m) (from LRFD-1986, Page 3-16)

$m.Q_{ce} = 6(74.1) = 445$ kip-ft $> Q_{ud} = 310$ kip-ft (420 kN – m) O.K.

Section 14.4a (4) of The AISC Seismic Provisions requires that the top and bottom flanges of the beams at the point of intersection of braces shall be designed to support a lateral force that is equal to 2% of the nominal beam flange strength $F_y b_f t_f$.

The top flange is assumed to be braced by the metal deck. Braces should be added to the bottom flange to support a lateral force equal to $0.02\ (F_y b_f t_f) = 0.02\ (36x4x0.35) = 1.0$ kips (4.44 kN).

Add two L3x3x1/4 at each intersection point, connecting the W12x19 beams to the W10x17 gravity beams at 45 degrees with one 5/8" (15.9 mm) dia. A325 bolt at each end.

The force in one brace = $(1.0 \text{ kips}/2) \times (2)^{1/2} = 0.71$ kips (3.2 kN)

Compression capacity of the brace:

$P_n = A_g F_{cr}$ (AISC LRFD Eq. E2-1)

$L = 4' \times (2)^{1/2} = 5.7'$
$K = 1.0$
$r = 0.592"$

$$\lambda_c = \frac{KL}{r\pi}\sqrt{\frac{F_y}{E}} = \frac{(1.0)(5.7')(12"/1')}{(0.592")(\pi)}\sqrt{\frac{(36ksi)}{(29000ksi)}} = 1.3 < 1.5$$ (AISC LRFD Eq. E2-4)

$$F_{cr} = (0.658)^{\lambda^2} F_y = (0.658)^{1.3^2}(36ksi) = 17.75ksi$$ (AISC LRFD Eq. E2-3)

$P_n = (1.44 \text{ in.}^2)(17.75 \text{ ksi}) = 25.65$ kips (114 kN) >> 0.71 kips (3.2 kN) O.K.

Shear capacity of a 5/8" dia. A325 bolt = $\phi_v F_v A_b = 5.22$ kips (23.2 kN) (AISC LRFD-1986, Table I-D)

$\phi_v = 0.65$ is used in the LRFD Table.

Therefore, when $\phi = 1.0$ is used, the shear capacity of the bolt becomes 8.0 kips (35.6 kN) >> 0.71 kips (3.2 kN) O.K.

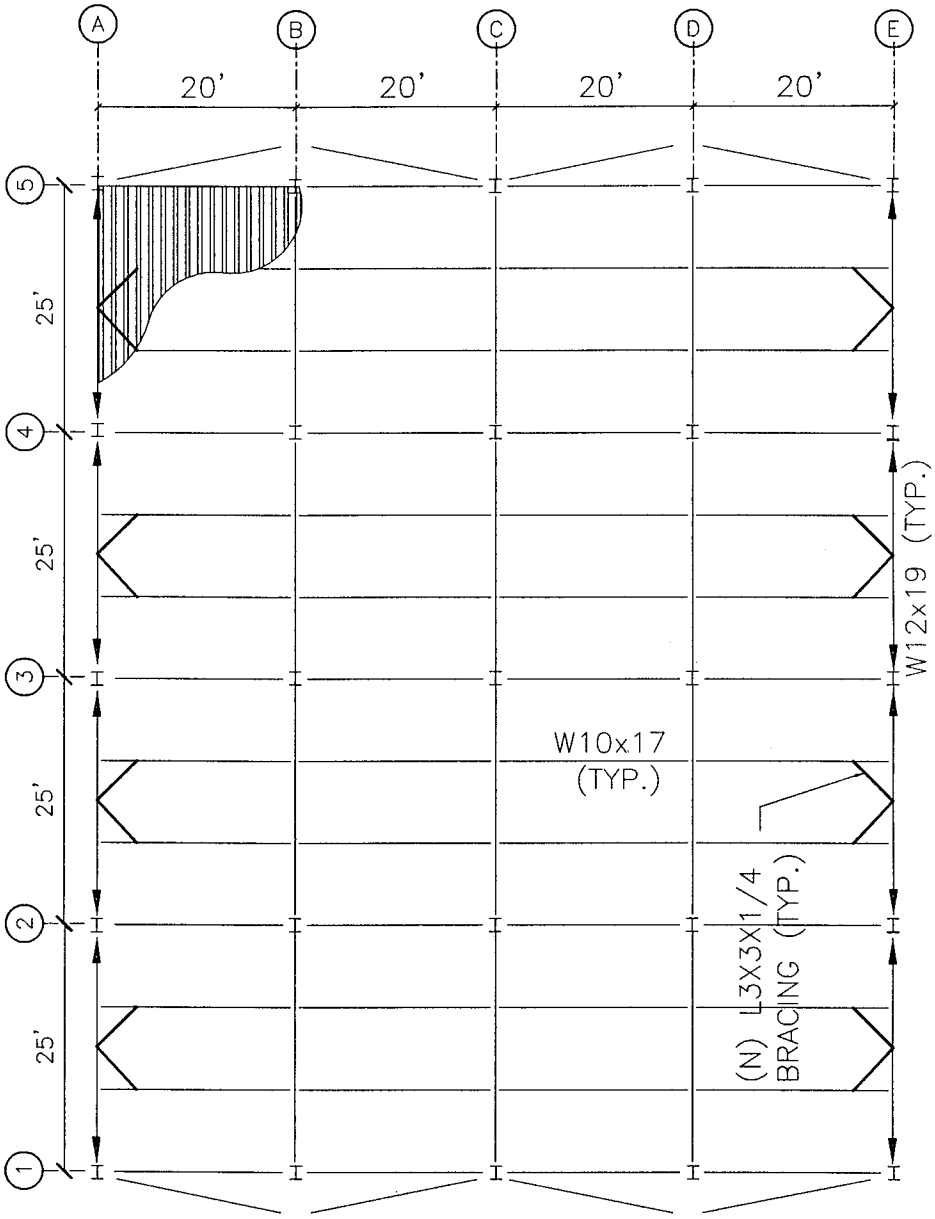

1 ft = 0.305 m

Figure D5-10: Roof Framing Plan - Lateral Bracing of Beams

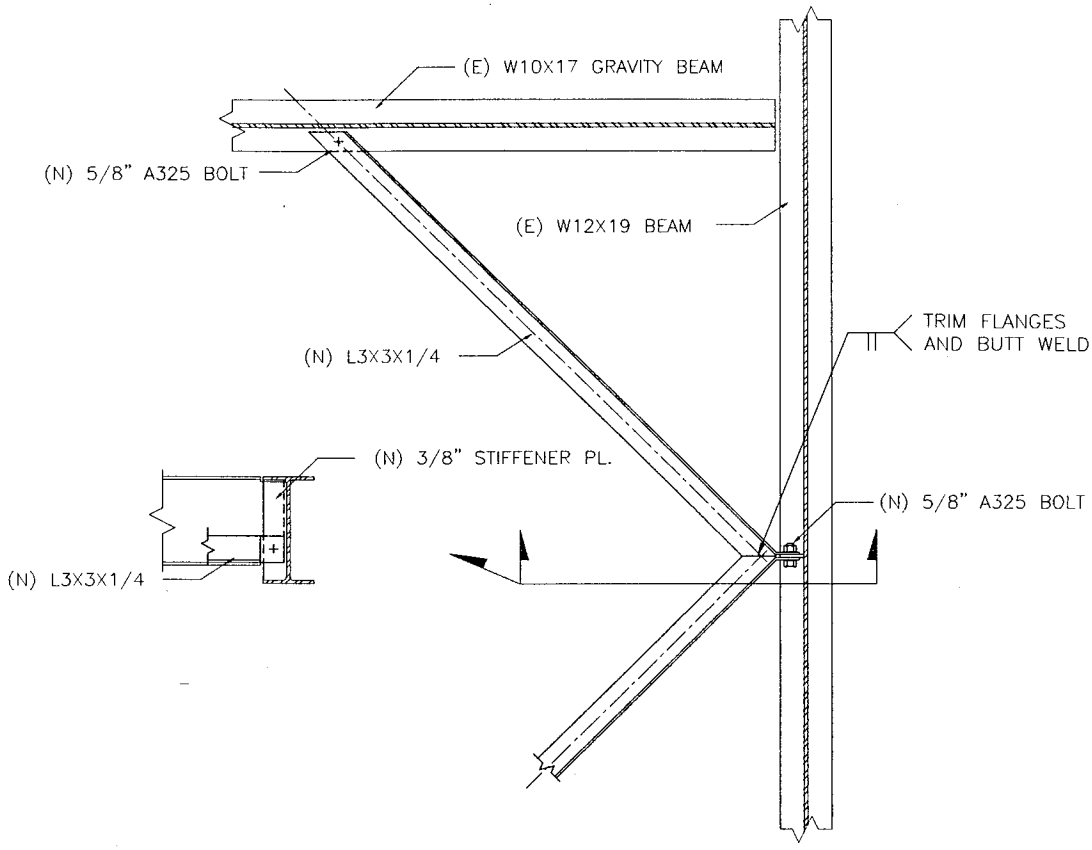

1 in = 25.4 mm

Figure D5-11: Detail of Lateral Bracing of Beams at Brace Intersections

Diaphragm Shear Capacity Check:

Since the diaphragm consists of bare metal decking, the seismic shear demand is distributed to the steel frames per tributary areas. There are only two frames in each direction along the perimeter of the building to resist the lateral force. Therefore, the maximum diaphragm shear demand would occur along the transverse (short) frames.

V_{max} (Q_E) = ($C_1C_2C_3S_aW_{diaph}$ / 2) / (X-Braced length)

W_{diaph} = (total seismic weight – weight of walls in the transverse direction) = 263 – 9.6 = 253.4 kips (1127 kN)

Maximum diaphragm load = (Q_E) = [(1.47)(1.29)(1.0)(0.75)]x(253.4 kips) / 100' = 3.6 kips/ ft (52.5 kN/m)

Max. diaphragm shear resisted by each transverse frame;
V_{max} = (3.6 kips/ft x 100') / (2 x 80') = 2.3 kips/ft (33.6 kN / m)

$$Q_{UF} = Q_G \pm \frac{Q_E}{C_1C_2C_3} \qquad \text{(FEMA 273 Eq. 3-16)}$$

$C_1C_2C_3$ = 1.47x1.29x1.0 = 1.9

Q_{UF} = 0.0 + 2.3/(1.9) = 1.21 kips/ft (17.7 kN / m)

FEMA178, Table C6.1.1a gives strength values for existing materials. The seismic shear capacity for a bare metal deck with minimal welding is given as 1.8 kips /ft (26.3 kN / m).

Therefore, Q_{CN} = 1.8 kips/ft (26.3 kN /m) > Q_{UF} = 1.21 kips/ft (17.7 kN / m) O.K.

Diaphragm Chord Forces:

The W12x30 steel beams along the perimeter of the building will act as chord members. The metal decking is assumed to provide only limited support against buckling of the chord. Therefore, the m-factor is equal to 2 for Life Safety Performance Level (per FEMA273 Sect. 5.8.6.3).

Maximum diaphragm load = 3.0 kips/ ft (43.8 kN / m)
Maximum moment at diaphragm midspan = wL^2 / 8 = $3x(100)^2$ / 8 = 3,750 kip-ft (5850 kN-m)
Maximum chord force = M /d = 3,750 / 80' = 47 kips (209 kN)

The weak-link in the chord members are the beam-column connections. The connections are checked here for the seismic demand as well as the gravity loading.

Maximum shear on Chevron-Frame beam (from Risa-2D run) = 3 kips (13.3 kN)

Resultant force on bolts due to gravity and seismic chord forces (Q_{UF})=$\{(3)^2+(47/1.9)^2\}^{1/}$ =25 kips (111 kN)

Use 3 5/8" dia. A325 bolts with allowable shear capacity of 3 x 14.4 = 43.2 kips (192 kN) (LRFD, Table I-D)

Q_{CN} = 43.2 kips (192 kN) > Q_{UF} = 25 kips (111 kN) O.K.

7. *Prepare construction documents (not shown)*

8. *Quality assurance quality control* (not in scope of problem)

APPENDIX E
ARCHITECTURAL COMPONENT EXAMPLES

This appendix illustrates the implementation of the provisions of this document for the seismic evaluation and rehabilitation of architectural nonstructural components in military buildings. The examples in the following sections of this appendix were selected to demonstrate the application of various rehabilitation techniques to mitigate seismic deficiencies identified in typical architectural components in existing military buildings.

E1. Unreinforced Masonry Parapet

E2. Canopy at Building Entrance

E3. Bracing of Library Shelving

DESIGN EXAMPLE PROBLEM E1: Retrofit of Unreinforced Masonry Parapet

Description

The parapet is part of the exterior wall of a 3-story structure built in the 1930's with structural steel frames and infilled unreinforced masonry walls. A wood roof is supported on steel trusses that are spaced at 20' o.c. (6.1 m) and bear on perimeter steel columns. The top chords of the trusses are sloped at 30 degrees from the horizontal. The roof framing consists of 4 by 12 inch (102 mm x 305 mm)wood rafters at 8 foot (2.44 m) supported by the steel trusses. The rafters support 2 x 4 inch purlins at 2 foot (610 mm) on center and the purlins support 1 x 6 inch straight-laid sheathing with tar and gravel roof. The exterior walls are 13-inch (330 mm) thick unreinforced brick and the parapet rises 6.5 feet (1.98 mm) above the spandrel beam line.

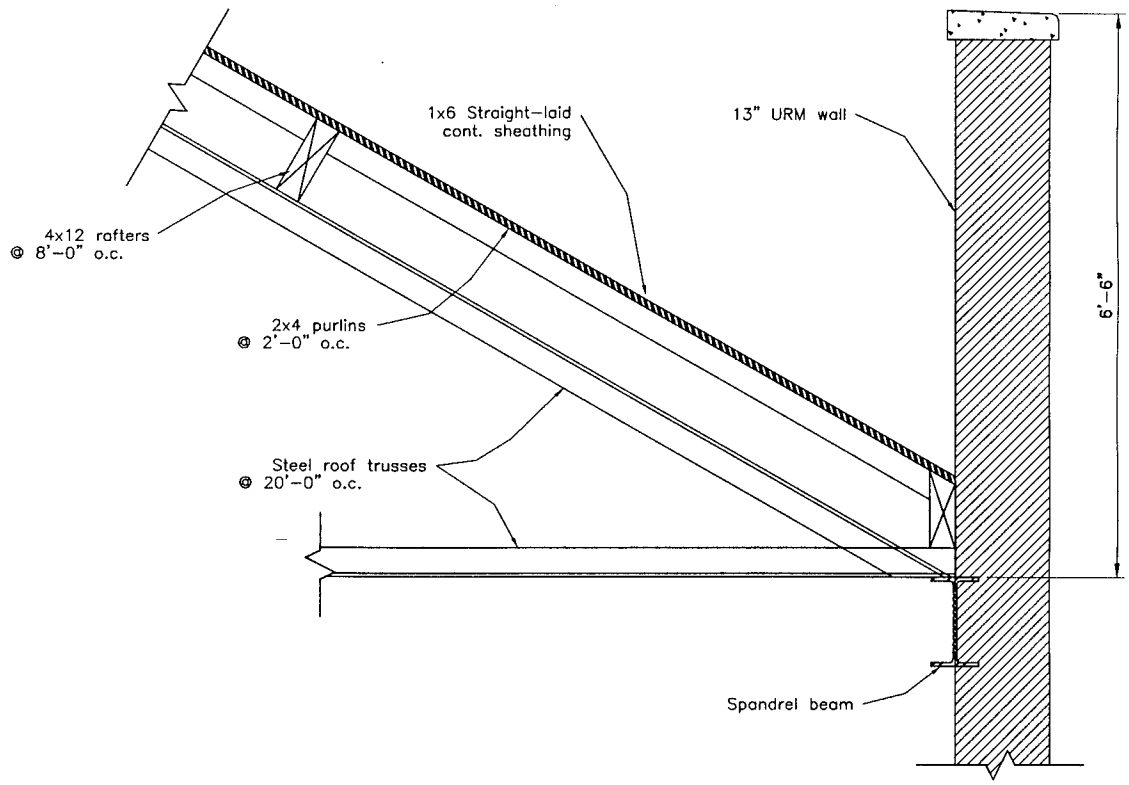

1 in = 25.4 mm
1 ft = 0.305 m

Figure E1-1: Section at Parapet

A. Preliminary Determinations

1. Obtain building and site data:

a. Seismic Use Group. The building is a Standard Occupancy Structure, and from Table 3-1, falls into Seismic Use Group I.

b. Structural Performance Level. The parapet is to be analyzed for the Life Safety Performance Level as described in Table 3-2.

c. Applicable Ground Motions (Performance Objective). The Performance Objective for the parapet is determined to be 1A, defined as the combination of Life Safety Performance Level with a ground motion of 2/3 MCE as prescribed for Seismic Use Group I. For this example, the design spectral response acceleration is assumed to be as follows:

$S_{DS} = 2/3\ S_{MS} = 0.65$ (TI 809-04 Eq. 3-3)

d. Seismic design category:

Based on Short Period Response Acceleration:

Seismic design category: D (Table 3-4a)

Based on 1 second period Response Acceleration:

Seismic design category: D (Table 3-4b)

B. Preliminary Structural Assessment

Not in scope of this example problem.

C. Structural Screening (Tier 1)

Not in scope of this example problem.

D. Structural Screening (Tier 2)

Not in scope of this example problem.

E. Structural Screening (Tier 3)

Not in scope of this example problem.

F. Preliminary Nonstructural Assessment

1) Exempt Components

Not applicable. The parapet is not considered an exempt component.

2) Classification of Componenet

The parapet is assigned an importance factor, I_p of 1.0.

3) Disposition

The parapet has been screened by the Tier 1 evaluation of FEMA 310 in Example Problem H3 of TI 809-51. It was determined that the building definitely needs rehabilitation.

G. Nonstructural Screening (Tier 1)

This step has already been completed as part of Example Problem H3 of TI 809-51.

H. Nonstructural Evaluation (Tier 2)
This step is skipped here since the building has already been designated as definitely requiring rehabilitation.

I. Evaluation Report

The evaluation report of the Example Problem H3 of TI 809-51 would include the following:

1. Building and Site Data

2. Preliminary nonstructural assessment

3. Nonstructural screening

4. Nonstructural evaluation

5. Judgmental Evaluations

A judgmental assessment of the results of the evaluation determined that the building definitely needs rehabilitation.

6. Rehabilitation strategy

The potential rehabilitation options included:

a. Remove parapet
b. Strengthen masonry parapet with concrete overlay.
c. Strengthen masonry parapet with steel bracing.

The last alternative to strengthen the parapet with bracing was selected as the rehabilitation alternative.

7. Rehabilitation concept

The rehabilitation concept is shown in Figure E1-2. It consists of the addition of steel channel bracing attached to the roof and to the parapet at 1'-0" (305 mm) below the top of parapet. Horizontal steel channel walers are provided along the parapet for horizontal brace reactions, and vertical flat bars mobilize the weight of the wall to provide vertical reactions.

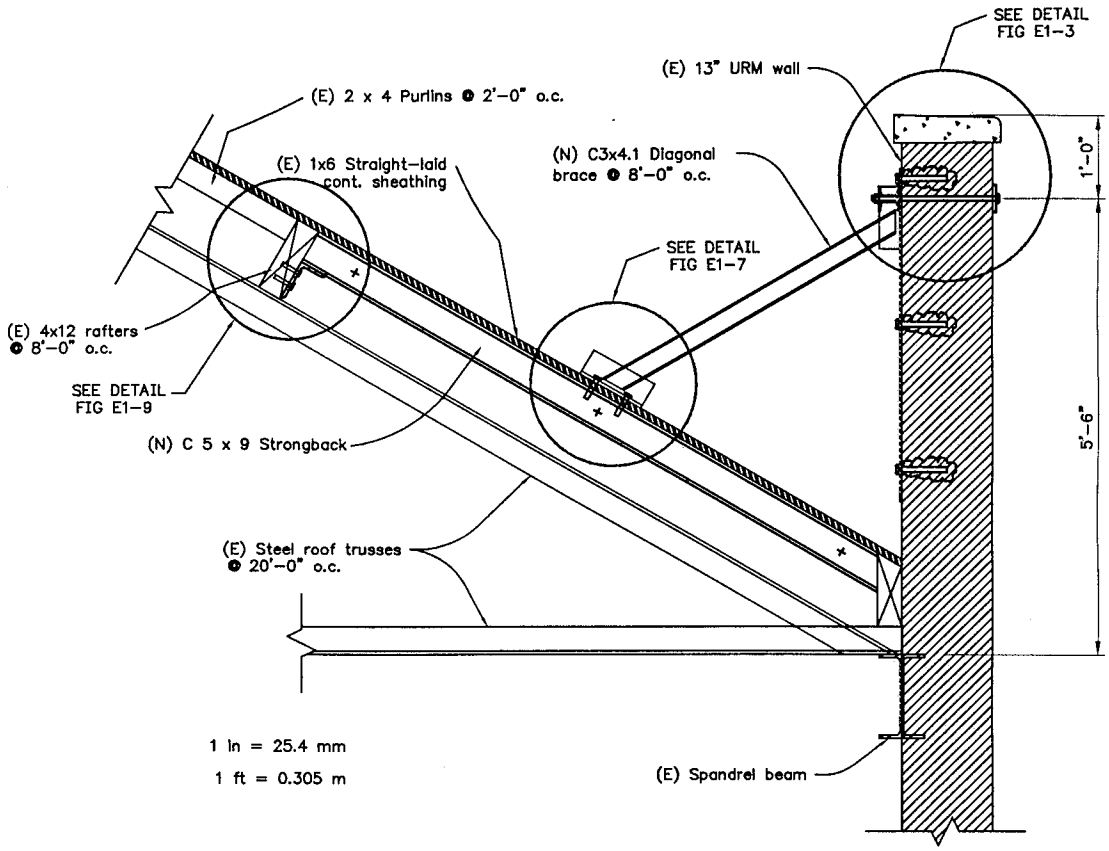

Figure E1-2: Parapet Bracing

J. Rehabilitation

The procedures for rehabilitation are outlined below:

1. *Review Evaluation Report and other available data.*

2. *Site Visit.*

3. *Confirming evaluation of existing building (if necessary).*

4. *Prepare alternative structural rehabilitation concepts.*

5. *Rehabilitation design.*

The rehabilitation design follows the procedures laid out in accordance with the provisions of Chapter 9 of this document. A detailed analysis follows.

Determine Seismic Forces

Select R_p and a_p, factors:

$a_p = 2.5$ (TI 809-04, Table 10-1)
$R_p = 1.25$ (TI 809-04, Table 10-1)

Seismic forces (F_p) shall be determined in accordance with Chapter 6 as follows:

$$F_p = \frac{0.4a_p I_p S_{DS} W_p}{R_p}\left(1+2\frac{x}{h}\right)$$ (TI 809-04, EQ. 10-1)

where; x/h = 41/36 (3rd story of a 3-story building)
$W_p =$ Dead load = 130psf (13-in. Brick)
$\therefore W_p = (1'+5.5'/2)(130psf) = 488plf$ (7.12 kN / m)

F_p is not required to be greater than:

$$F_p = 1.6S_{DS}I_pW_p$$ (TI 809-04, EQ. 10-2)

nor less than:

$$F_p = 0.3S_{DS}I_pW_p$$ (TI 809-04, EQ. 10-3)

$$F_p = \frac{0.4(2.5)(1.0)0.65(488plf)}{1.25}\left(1+2\frac{41}{36}\right) = 1.73(488plf) = 846plf \text{ (12.3 kN / m)}$$

$(F_p)_{max} = 1.6(0.65)1.0(488plf) = 508plf < 846plf = F_p$ (12.3 kN / m) **Governs**
$(F_p)_{min} = 0.3(0.65)1.0(488plf) = 95plf < 846plf = F_p$ (12.3 kN / m) **O.K.**

$\therefore F_p = 508plf$ (7.4 kN / m)

Brace to wall connection

Try 5/8-in. ϕ bolts (A-307) extending through wall with steel bearing plates.

The design axial strength, B_a for headed anchor bolts embedded in masonry shall be the least of:

$B_a = 4\phi A_p\sqrt{f'_m}$ (strength governed by masonry breakout) (FEMA 302 Eq. 11.3.12.2-1)
where $A_p = \pi l_b^2 = \pi(13")^2 = 530$ in.^{2}
$B_a = 4(0.5)(530\text{in.}^2)\sqrt{900\text{psi}} = 31.8\text{kips/anchor}$ (141 kN)

$B_a = \phi A_b f_y$ (strength governed by steel) (FEMA 302 Eq. 11.3.12.2-2)
$B_a = (0.9)(0.31\text{in.}^2)(60\text{ksi}) = 16.7\text{kips/anchor}$ (74.3 kN)

For anchors at 6' (1.83 m) on center Q_N = 16.7 kips / 6ft^2 = 2780 psf
Q_{CN} =2780 plf (40.6 kN / m) > Q_{UF} = 508 plf (7.4 kN /m), OK

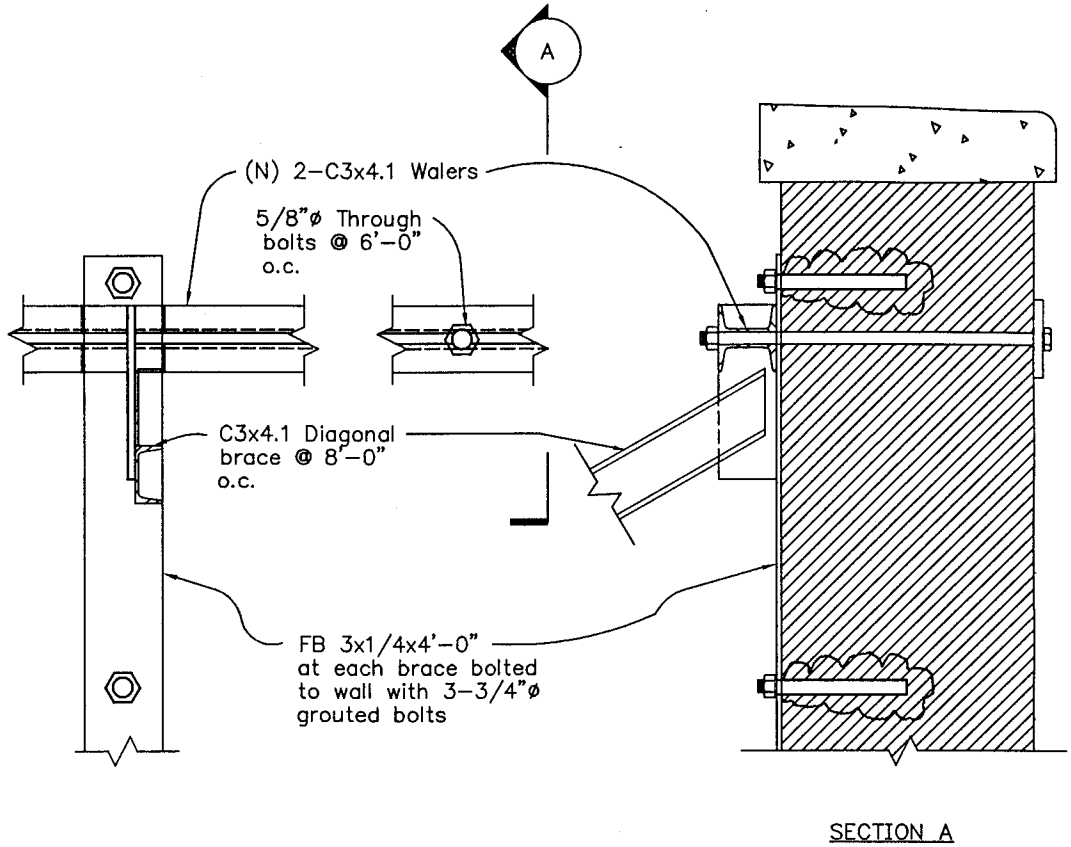

1 in = 25.4 mm
1 ft = 0.305 m

Figure E1-3: Detail at Top of Parapet Brace

Design of Walers:

Check flexure for bracing at 8'-0" (2.44 m) on center:

Assume simple beam moment for channel spanning between bolts;

$fM_n > M_u$

$$M_u = \frac{W_p L^2}{8} = \frac{508 plf (8')^2 (12''/1')}{8} = 48{,}700^{in-lb} \text{ or } 4.06 \text{ kip-ft } (5.5 \text{ kN} - \text{m})$$

For C3x4.1, L_b = 8'-0"; Z = 1.04-in^3, L_p=1.7', L_r=12.1'

For $L_p < L_b < L_r$:

$$\phi M_n = \phi M_p - \phi(M_p - M_r)\frac{L_b - L_p}{L_r - L_p} < \phi M_p$$

$$\phi M_n = 3.51 - 0.90(3.9 - 2.38)\frac{8' - 1.7'}{12.1' - 1.7'} \text{ x 2 walers} > 4.06 \text{ kip-ft } (5.5 \text{ kN} - \text{m})$$

$$\phi M_n = 5.36 \text{ kip} - \text{ft } (7.23 \text{ kN} - \text{m}) > 4.06 \text{ kip} - \text{ft } (5.5 \text{ kN} - \text{m}) \qquad \textbf{O.K.}$$

Check deflection at service level loads (W_p/1.4):

$$\Delta_{flex\ trans} = \frac{5wL^4}{384EI} = \frac{5(508\ plf)/1.4(1'/12")(8ft*12"/')^4}{384(29000000psi)(2)(1.66)in^4} = 0.35in = \frac{1}{275} \qquad \textbf{O.K.}$$

Design of channel brace

(Brace is sloped at 60 degrees)

Check axial compression in brace:

$$P_{BR} = \frac{2(l)(w_p)}{\sqrt{3}} = \frac{2(8')(0.508)}{\sqrt{3}} = 4.70 \text{ kips (20.9 kN) per brace}$$

Try 2-C3x4.1 r_{min}=0.40 in. A=1.21 in.^{2}

L_{max} = 48"

L/r = 48/0.40 = 120

$\phi_c F_{cr}$ = 14.34 ksi

$\phi P_n = \phi_c F_{cr}(A)$ = 14.34(1.21) = 17.30 kips (77.5 kN) per brace > 4.70 kips (20.9 kN) **O.K.**

Check Upward Reactions on wall

$$P_V = \frac{P_u}{\sqrt{3}} = \frac{(8')(0.508)}{\sqrt{3}} = 2.4 \text{ kips (10.7 kN) per brace}$$

Weight of brick above waler = (1)(8)(0.13)=1.04 kips (4.6 kN)
Provide vertical member to mobilize additional weight of wall (See Figure E1-2)
Use flat bar 3x1/4 with 3-3/4"ϕ shear bolts to wall

Bolt Capacity:

$$B_v = 1750\phi\left(\sqrt{f'_m A_b}\right)^4 \quad \text{(strength governed by masonry)} \qquad \text{(FEMA 302 Eq. 11.3.12.3-1)}$$

$$= 1750(0.5)(900\text{psi x } 0.31)^4 = 3.6 \text{ kips/anchor (16.0 kN)}$$

$$B_v = 0.6\phi A_b f_y \quad \text{(strength governed by steel)} \qquad \text{(FEMA 302 Eq. 11.3.12.3-2)}$$

$$= 0.6(0.9)(0.31)(60 \text{ ksi}) = 10.0 \text{ kips/anchor (44.5 kN)}$$

V_{bolts} = 3 x 3.6 x 0.85 = 8.6 kips (38.3 kN > 2.4 kips (10.7 kN) **O.K.**

Connection of brace to walers

P_{BR} = 4.70kips (20.9 kN) per brace

For a 3/16" fillet weld (L60 electrodes), the strength of weld metal is:

$$0.707x\frac{3}{16}x\phi F_w = 0.133x0.75[0.60(60)] = 3.58k/in$$

For a 4" weld, $\phi R_n = 4x3.58 = 14.32\,kips\,(63.7\,kN) > 4.70\,kips\,(20.9\,kN$

Connection of walers to 3/8" plate

P = ¼ x 4.04k = 1.01kips (4.5 kN)

1/8" fillet weld

$$0.707x\frac{1}{8}x\phi F_w = 0.088x0.75[0.60(60)] = 2.39k/in$$

For a 2.5" weld, $\phi R_n = 2.5x2.39 = 5.98k\,(26.6\,kN) > 1.01k\,(4.5\,kN)$

3/8" base plate to ¼" flat bar

P_v = 2.4kips (10.7 kN) per brace P_h = 4.04 kips (18.0 kN) per brace

For a 3/16" fillet weld,

$$\phi R_n = 2x6x3.58 = 43kips\,(191\,kN)$$

$$\frac{2.4k}{43k} + \frac{4.04k}{43k} \le 1.0$$

$$0.056 + 0.094 = 0.15 \le 1.0 \qquad \textbf{O.K.}$$

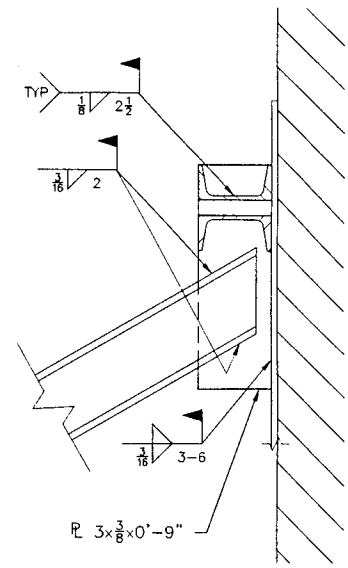

Figure E1-4: Parapet Brace Connection

Note:

Existing 4x12 rafters are on 8'-0" (2.44 m) on center, so locate parapet braces over rafters. In the orthogonal direction, 2x4 purlins are on 2'-0"(610 mm) on center, so locate parapet braces over every fourth purlin.

Design channel strongback for 2x4 purlin to carry the brace load

2x4 Purlins are at 8'-0" o.c.

$$M_{MAX} = \frac{Pxaxb}{L} = \frac{4.04x4.5x3.5}{8} = 7.95kip-ft = 95.44kip-in\,(10.8kN-m)$$

Try C5x6.7 Z=3.51 in^3

$$Z_{req'd} = \frac{M_{MAX}}{\phi_b F_y} = \frac{95.44in-k}{0.9(60)} = 1.76in^3 < 3.51\,in^3 \quad \text{O.K.}$$

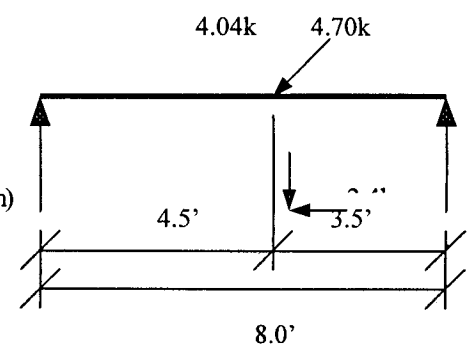

Figure E1.5: Parapet Brace Reactions at Existing 2x4 Purlin

Use C5x9 (Minimum size for 5/8"-diameter bolt to flange)

Connection of Diagonal Brace to Strongback

Use L4x3½x3/8

Weld channel to angle as at top connection (See Figure e1-3)

Bolt L to strongback through existing sheathing. Since there are no published values for this type of connection, an allowable value will be derived based on calculated maximum combined stress.

Calculate bolt capacity assuming 1" sheathing is only a spacer between two steel plates.

Try 5/8"-diameter bolt at roof of thread: D = 0.514"
A = 0.208 in^2

For A307 bolt, f_y = 36 ksi

For 2.40k load (10.7 kN)(horiz.) and 4.04k (18.0 kN) (vert):

Allowable stresses:

bending = ϕF_{bn} = 0.9 x 0.75 x 36 = 24.3 ksi x 1.7 = 41.3 ksi
shear = ϕF_{vn} = 0.85 x 0.4 x 36 = 12.2 ksi x 1.7 = 20.7 ksi
bearing = ϕF_{bn} = 0.90 x 0.6 x 36 = 19.4 ksi x 1.7 = 33.0 ksi
tension = ϕF_{tn} = 0.90 x 0.6 x 36 = 19.4 ksi x 1.7 = 33.0 ksi

M = 2.40k x 1.22" x 0.5 = 1.47 kip-in (166 N - m)

$$f_b = \frac{M}{S} = \frac{1.47}{0.13} = 11.30\text{ksi}$$

$$S = \frac{\Pi D^3}{32} = \frac{\Pi x 0.514^3}{32} = 0.13\text{in}^3$$

$$f_v = \frac{F}{A} = \frac{2.40}{0.208} = 11.54\text{ksi}$$

$$f_{bearing} = \frac{2.4}{0.514x0.320} = 14.6\text{ksi}$$

$$f_{tn} = \frac{4.04}{0.208} = 19.42\text{ksi}$$

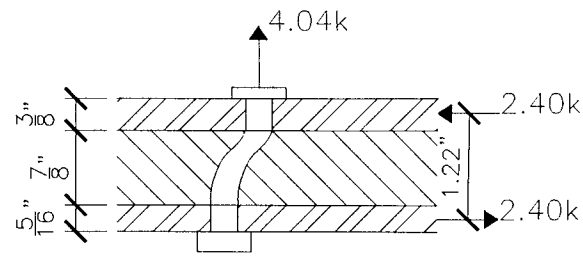

1 kip = 4.448 kN

Figure E1-6: Forces on Bolt at Roof Sheathing

Since connection will not develop the strength of the brace,

Assume

ϕF_{tn} = 0.67 x 20.0 x 1.7 = 22.78 ksi (157 MPa)

$$= \sqrt{11.30^2 + 11.54^2 + 19.42^2}$$

= 25.3 ksi/bolt (174 MPa)

Use 2-5/8 ϕ bolts f_{tmax} = 25.3ksi/2=12.65ksi (87 MPa) < 22.78 ksi (157 MPa) **O.K.**

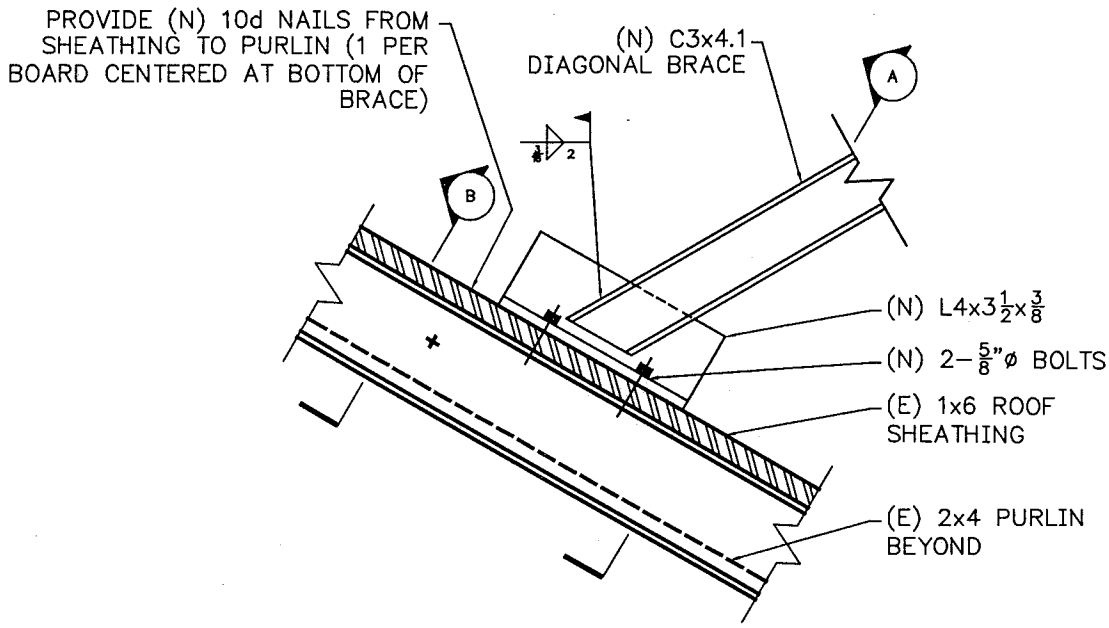

Figure E1-7: Detail at Bottom of Parapet Bracing

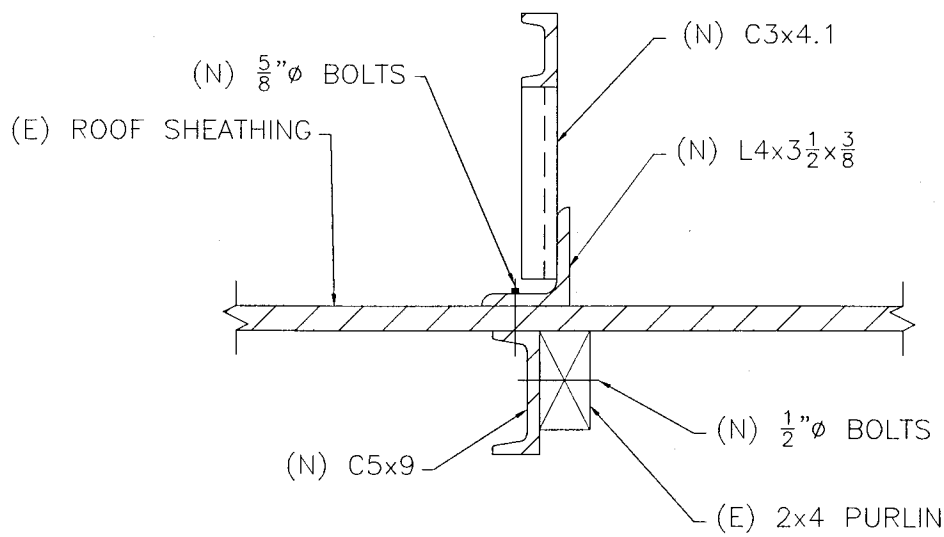

1 in = 25.4 mm

Figure E1-8: Section A-A

Connection of C5x9 to 4x12 rafter

$V_{max} = \frac{4.5}{8.0} x4.04k = 2.27k$ ips (10.1 kN) (moments about left end of C5x9)

5/8" ϕ lag screw (parallel to grain) 3" penetration

$F_{all} = \phi F_n = 0.9 \times 790 = 711$ lbs/bolt (3.2 kN) (UBC 97, Table 23-III U)

Use 4-5/8" ϕ lag screws $\sum F_{all} = 4x711 = 2.84k$ (12.6 kN) > 2.27k (10.1 kN) O.K.

Connection of C5x9 to 2x4 purlins

$V_{max} = 2.27k$ (10.1 kN)

For ½"ϕ bolts (parallel to grain)

$F_{all} = \phi \times F_n$ ϕ=1.0

$F_n = 2 \times 1.75 \times 745 = 2.61k$

$F_{all} = 1.0 \times 2.61$

=2.61k/bolt (11.6 kN)

2 = NEHRP multiplier 1.75 = metal side plate
745lbs (3.3 kN)= National Design Specification value

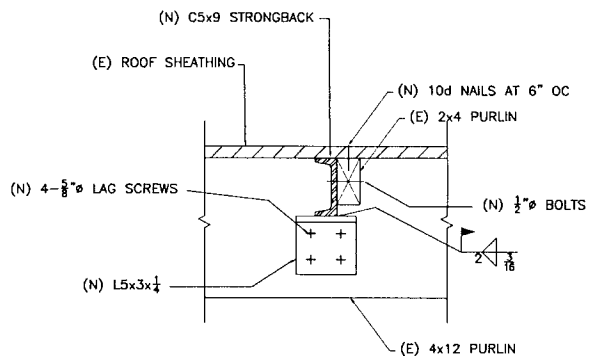

Figure E1-9: Section B-B

Use 3-½" ϕ bolts $F_{act} = 3 \times 2.61 = 7.83k$ (34.8 kN) > 2.27k (10.1 kN) O.K.

Nailing of sheathing to 2x4 purlin.

$V_{max} = 2.27k$ (10.1 kN) $v = \frac{2.27k}{8} = 0.284$ k/ft (4.14 kN / m)

For 10d nails- $F_{all} = \phi F_n = 1.0 \times 2 \times 76 = 152$ lb/nail (676 N)

Use 10d nails- 6" on center to 2x4, $F_{act} = \frac{12}{6} x152 = 304$lb / ft (4.4 kN / m) > 284 lb/ft (4.14 kN / m) O.K.

Design Condition where Parapet Brace is Parallel to 4x12 rafter

Dead Load = 20.0 psf (958 Pa) (Assumed)

L = 20' w = 20.0 x 8 = 160 lb/ft (876 N / m)

$M = \frac{160lb/ft(20ft)^2}{8} = 8k-ft = 96k-in$ (10.8 kN-m) $S = \frac{3.625(11.625)^2}{6} = 81.6in^3$

$f = \frac{M}{S} = \frac{96}{81.6} = 1176psi$ O.K., Assume $F_{all} = \sim 1400$ psi

Rafters are sized for stiffness and have a large excess capacity for brace loads.

Use L4x3½x3/8x3'-0" to receive parapet load brace load and to transfer it to 4x12 rafters.

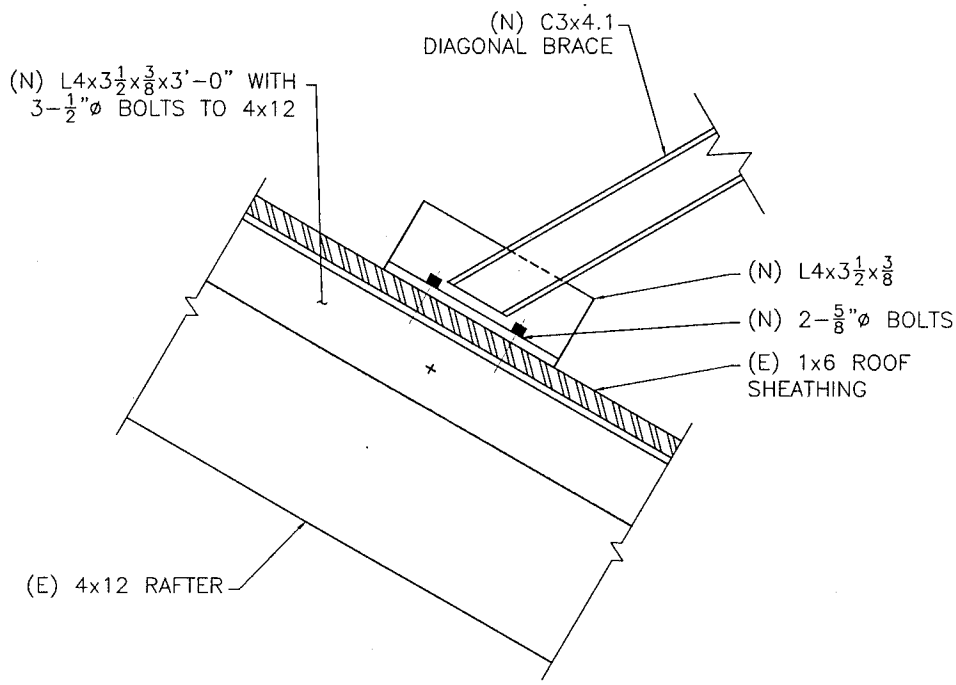

1 in = 25.4 mm

Figure E1-10: Detail for Parapet Brace at 4x12 Rafter

DESIGN EXAMPLE PROBLEM E2: Evaluation and Retrofit of Canopy at Building Entrance

Description

This example consists of the evaluation and rehabilitation of an existing steel frame canopy over the main entrance of a two-story military building. The canopy measures 20' long in plan and extends out 8' from the exterior of the building. It was designed for gravity loads only, with steel decking over steel wide flange beams and channels supported by two tie rods connected to existing concrete walls.

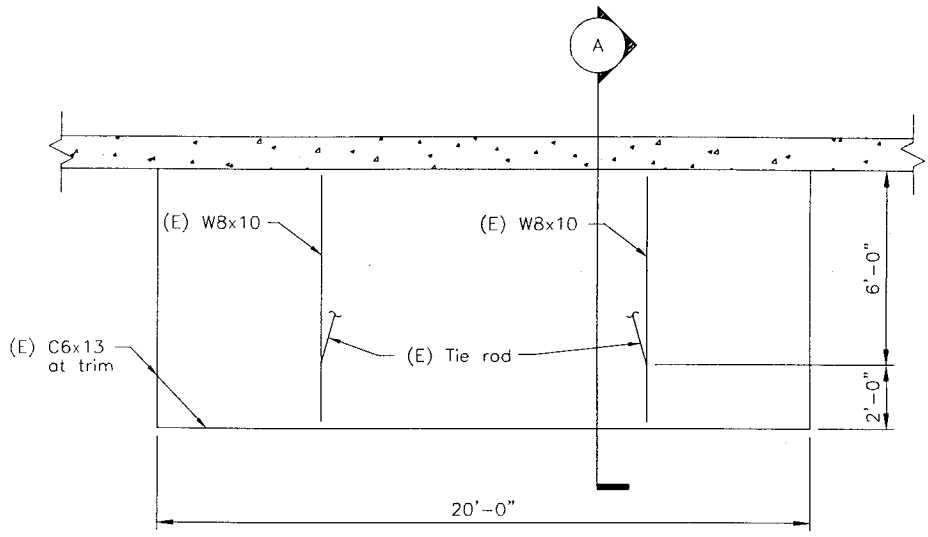

1 ft = 0.305 m

Figure E2-1: Canopy Plan

A. Preliminary Determinations

1. Obtain building and site data:

a. Seismic Use Group. The building is a Standard Occupancy Structure, and from Table 3-1, falls into Seismic Use Group I.

b. Structural Performance Level. The canopy is to be analyzed for the Life Safety Performance Level as described in Table 3-2.

c. Applicable Ground Motions (Performance Objective). The Performance Objective for the canopy is determined to be 1A, defined as the combination of Life Safety Performance Level with a ground motion of 2/3 MCE as prescribed for Seismic Use Group I. For this example, the spectral response acceleration is assumed to be as follows:

$S_{DS} = 2/3\ S_{MS} = 0.80$ (TI 809-04 Eq. 3-3)

The canopy will be evaluated for vertical acceleration equal to 2/3 S_{DS}.

d. Seismic design category:

Based on Short Period Response Acceleration:

Seismic design category: D (Table 3-4a)

Based on 1 second period Response Acceleration:
Seismic design category: D (Table 3-4b)

B. Preliminary Structural Assessment

Not in scope of this example problem.

C. Structural Screening (Tier 1)

Not in scope of this example problem.

D. Structural Screening (Tier 2)

Not in scope of this example problem.

E. Structural Screening (Tier 3)

Not in scope of this example problem.

F. Preliminary Nonstructural Assessment

Preliminary assessment of the canopy is based upon available drawings and visual inspection of the accessible components. A plan view and section of the canopy is given in Figure E2-1.

1) Exempt Components

Not applicable. The canopy is not considered an exempt component.

2) Classification of Component

The canopy is assigned an importance factor, I_p of 1.5 and classified as important because it could impede safe egress from a principle building exit.

3) Disposition

The canopy shall be screened by the Tier 1 evaluation of FEMA 310.

G. Nonstructural Screening (Tier 1)

The canopy is anchored at a spacing greater than 10 feet for Life Safety, and so a Tier 2 evaluation is required.

H. Nonstructural Evaluation (Tier 2)

The canopy is subjected to a Tier 2 analysis according to the provisions of Section 4.8 of FEMA 310 except as modified by Section 6.3 of this document. Analysis is performed as follows.

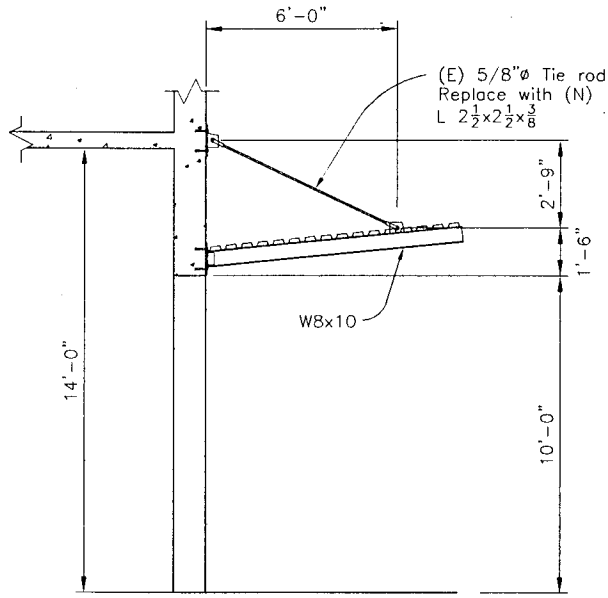

1 ft = 0.305 m
1 in = 25.4 mm

Figure E2-2: Section A of Canopy

Determine Gravity Forces on Supports

Dead Load:

Metal Deck	3 psf
Steel support members	2 psf
Roofing	3 psf
Total:	8 psf (383 Pa)

Live Load: 5 psf (239 Pa)

Tributary Area = 20' x 5' = 100 sqft

Total Dead Load: 8 psf x 100 sqft = 800 lbs. (3.56 kN)
Total Live Load: 5 psf x 100 sqft = 500 lbs. (2.22 kN)

Dead Load on each 5/8" tie rod: (For Brace at 60 degrees from vertical)
2(0.8 k) / 2 tie rods = 0.8 kips (3.56 kN) dead load per tie rod

Live Load on each 5/8" tie rod:
2(0.5 k) / 2 tie rods = 0.5 kips (2.22 kN) live load per tie rod

Determine Seismic Forces

Select R_p and a_p, factors:

$a_p = 2.5$ (TI 809-04, Table 10-1)
$R_p = 1.5$ (TI 809-04, Table 10-1)

Seismic forces (F_p) shall be determined in accordance with Chapter 6 as follows:

$$F_p = \frac{0.4a_pI_pS_{DS}W_p}{R_p}\left(1+2\frac{x}{h}\right);\ W_p = 0.8\text{ k (3.56 kN)};\ x/h = 0.5 \qquad \text{(TI 809-04, EQ. 10-1)}$$

F_p is not required to be greater than:

$$F_p = 1.6S_{DS}I_pW_p \qquad \text{(TI 809-04, EQ. 10-2)}$$

nor less than:

$$F_p = 0.3S_{DS}I_pW_p \qquad \text{(TI 809-04, EQ. 10-3)}$$

$$F_p = \frac{0.4(2.5)(1.5)(2/3)0.65(0.8\text{ k})}{1.5}(1+2(0.5)) = 0.87(0.8\text{ k}) = 0.7\text{ k (3.11 kN)}$$

$(F_p)_{max} = 1.6(0.65)1.5(0.8\text{k}) = 1.3\text{ k} > 0.7\text{ k} = F_p$ **O.K.**

$(F_p)_{min} = 0.3(0.65)1.5(0.8\text{ k}) = 0.3\text{ k} < 0.7\text{ k} = F_p$ **O.K.**

$\therefore\ F_p = 0.7\text{ k (3.11 kN)}$

Seismic Force on each 5/8" tie rod at 60 degrees from vertical:
2 x 0.7 k /2 tie rods = 0.7 kips (3.11 kN) seismic load per tie rod

Check 5/8" supporting tie rods

Since the rods are tension-only members, the ability of the dead load to resist the seismic forces imposed by vertical acceleration of the canopy must be checked:

$Q_u = 0.9D - 1.0Q_E$
$= 0.9(0.6\text{ k}) - 1.0(0.7\text{ k}) = -0.2\text{ k}$ (-.89 kN) (Net compression in tie rod) **NG**

I. Evaluation Report

The Evaluation Report shall summarize the following as required for this example problem:

1. Building and Site Data

2. Preliminary nonstructural assessment

3. Nonstructural screening

4. Nonstructural evaluation

5. Judgmental Evaluations

A judgmental assessment of the results of the evaluation and a statement of the evaluator's assessment of the level of confidence are to be included as part of the report. The dead load for the canopy is not capable of resisting the seismic force associated with vertical acceleration of the canopy, and supporting tie rods are capable of resisting tension loads only. It is determined that the canopy definitely needs rehabilitation.

6. Rehabilitation strategy

If the canopy is to remain, the most cost-effective rehabilitation option for the canopy is to replace the tie rods with a steel member capable of resisting the compressive forces associated with vertical seismic forces.

7. Rehabilitation concept

The rehabilitation concept is shown in Figure E2-2. It consists of the addition of steel angle bracing attached to the roof and to the concrete wall.

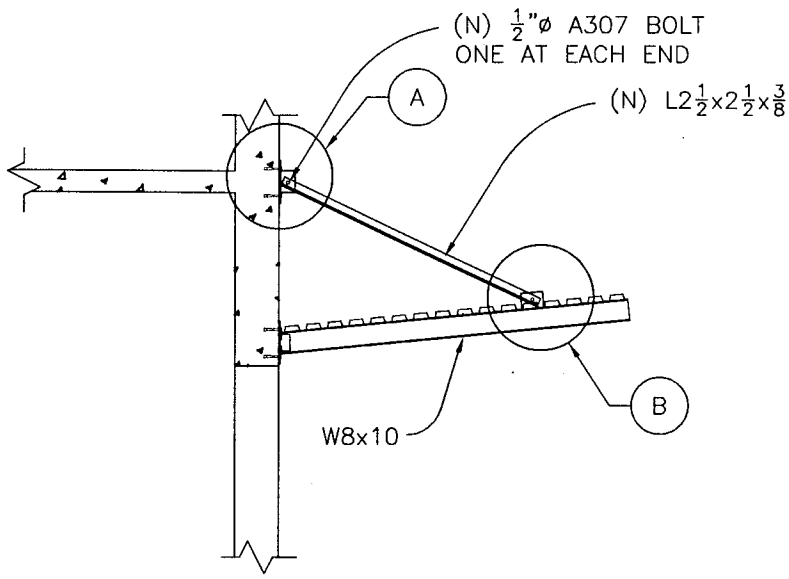

1 in = 25.4 mm

Figure E2-3: Canopy Bracing

J. Rehabilitation Design

The procedures for rehabilitation are outlined below:

1. Review Evaluation Report and other available data.

2. Site Visit.

3. Confirming evaluation of existing building (if necessary).

4. Prepare alternative structural rehabilitation concepts.

5. Rehabilitation design.

The rehabilitation design follows the procedures laid out in accordance with the provisions of Chapter 7 and 9 of this document and FEMA 302 for the design and detailing of new structural components. A detailed analysis follows.

Determine gravity load effects

For the canopy, gravity loads are determined thus:

P_u=1.4D
P_u=1.2D+1.6L_r

(ANSI/ASCE 7-95)

Note: Wind loads are not included in this analysis. For a complete design, any nonstructural component must also be checked for the effects of any applicable wind loads in accordance with the load combinations prescribed by ANSI/ASCE 7-95.

P_u=1.4(0.8 k) = 1.1 kips (4.89 kN) axial tension per brace
P_u= [1.2(0.8 k) + 1.6(0.4k)] = 1.6 kips (7.12 kN) axial tension per brace (Governs)

Try L2 ½ x 2 ½ x 3/8 A=1.73 in.^{2}

1.6 k (7.12 kN) per brace < 0.9(36ksi)(1.73) = 56.0 k (249 kN) per brace OK

Design for Combination of seismic and gravity load effects

$Q_u = 1.0Q_G + 1.0Q_E$

where Q_G:
$=1.2\ Q_D + 0.5Q_L + 0.2\ Q_S$ (Eq. 7-1)
$=0.9\ Q_D$
and $Q_E = F_p$

For Tension on brace (gravity and seismic forces are additive):

Q =1.2(0.8k)+0.5(0.4k)+1.0(0.7k) = 1.9 k (8.45 kN) per brace

1.9 k (8.45 kN) per brace < 0.9(36ksi)(1.73) = 56.0 k (249 kN) per brace **OK**

For compression in brace:

Q =0.9(0.8k)-1.0(0.7k) = -0.02 k (89 N) per brace net compression

For L2 ½ x 2 ½ x 3/8 r_{min}=0.753 in. A=1.73 in.^{2}

L_{max} = 79"

L/r = 79/0.753 = 105

$\phi_c F_{cr}$ = 13 ksi

$\phi P_n = \phi_c F_{cr}(A) = 13(1.73) = 23\,k$ (102 kN) per brace **O.K.**

0.02 k per brace (89 N) < = 23 k (102 kN) per brace compression **OK**

USE L2 ½ x 2 ½ x 3/8 Brace to wall

<u>Design connection to concrete wall:</u>

Anchor steel angle to wall using a bolted connection to a 6x4x¼ gusset plate that is welded to a ¼" plate. The plate is bolted to the wall using 4-3/8" ϕ adhesive anchors.

Total Demand per bolt = 1.9 k per brace/4 bolts = 0.48k (2.15 kN)

Demand shear per bolt = $0.48/2 = 0.24k$ (1.08 kN)

Demand tension per bolt = $0.48x\sqrt{3}/2 = 0.42k$ (1.87 kN)

Bolt shear capacity:

Test data and design values for various proprietary post-installed systems are available from various sources, including International Conference of Building Officials (ICBO) reports and in manufacturer's literature.

Because there commonly is a relatively wide scatter in ultimate strengths, common practice is to define working loads as one-quarter of the average of the ultimate test values. Where working load data are defined in this manner, FEMA 273 Sec. C6.4.6.2 recommends using a design strength equal to twice the tabulated working load. Alternatively, where ultimate values are tabulated, it may be appropriate to use a design strength equal to half the tabulated average ultimate value.

For a 3/8" ϕ (9.5 mm) adhesive anchor (ASTM A36) with 3 ½" (89 mm) embedment depth and minimum spacing requirements satisfied, a working load value of 1110 lbs (4.89 kN) in shear and 1550 lbs (6.89 kN) in tension is obtained from ICBO reports. The design values used are 2 x 1110 lbs = 2220 lbs (9.87 kN) in shear and 2 x 1550 lbs = 3100 lbs (13.8 kN) in tension.

$$\frac{V_u}{V_c} + \frac{P_u}{P_c} = \frac{240}{2220} + \frac{420}{3100} = 0.11 + 0.14 = 0.25 \le 1.0 \qquad \textbf{O.K.}$$

Use 4-3/8" ϕ adhesive anchor at each brace.

The 6x4x¼ gusset plate is shop welded to a 12x12x¼ plate with a 3/16" fillet weld on both sides.

The angle brace is connected to the gusset plate a with 5/8" ϕ (15.9 mm) A307 bolt. From the LRFD Manual Volume II, the design shear strength of a bolt is 5520 lbs (24.6 kN).

Bolt capacity = 5.52 k (24.6 kN) > Demand force = 1.9 k (8.4 kN). O.K.

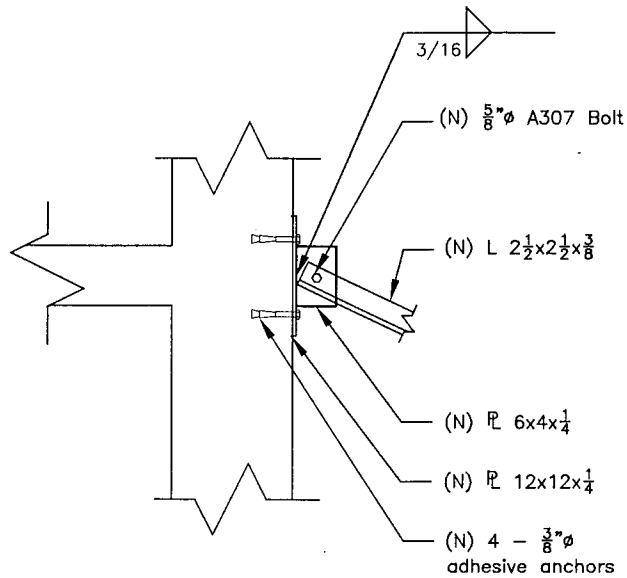

1 in = 25.4 mm

Figure E2-4: Detail A - Connection to wall

Design connection to canopy:

The connection of the angle bracing to the canopy framing is similar to the connection to the wall, except that the gusset plate is welded directly to the top flange of the W8x10 framing with 3/16" fillet weld on both sides. The capacity of the weld is o.k. by inspection.

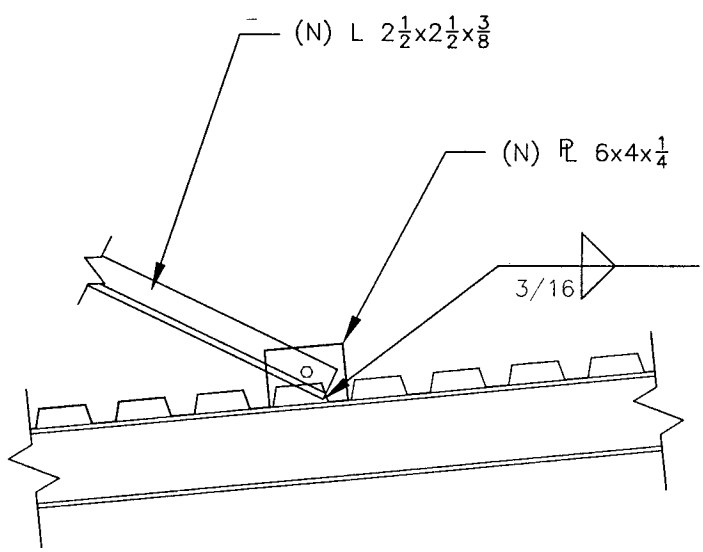

Figure E2-5: Detail B - Connection to Canopy Framing

DESIGN EXAMPLE PROBLEM E3: Bracing of Library Shelving

Description

This example consists of the evaluation and bracing of two free-standing library bookshelves located on the second floor of a two-story library building. The shelves are entirely constructed of 1-inch plywood and are to be evaluated and rehabilitated as required only for stability under ground motion.

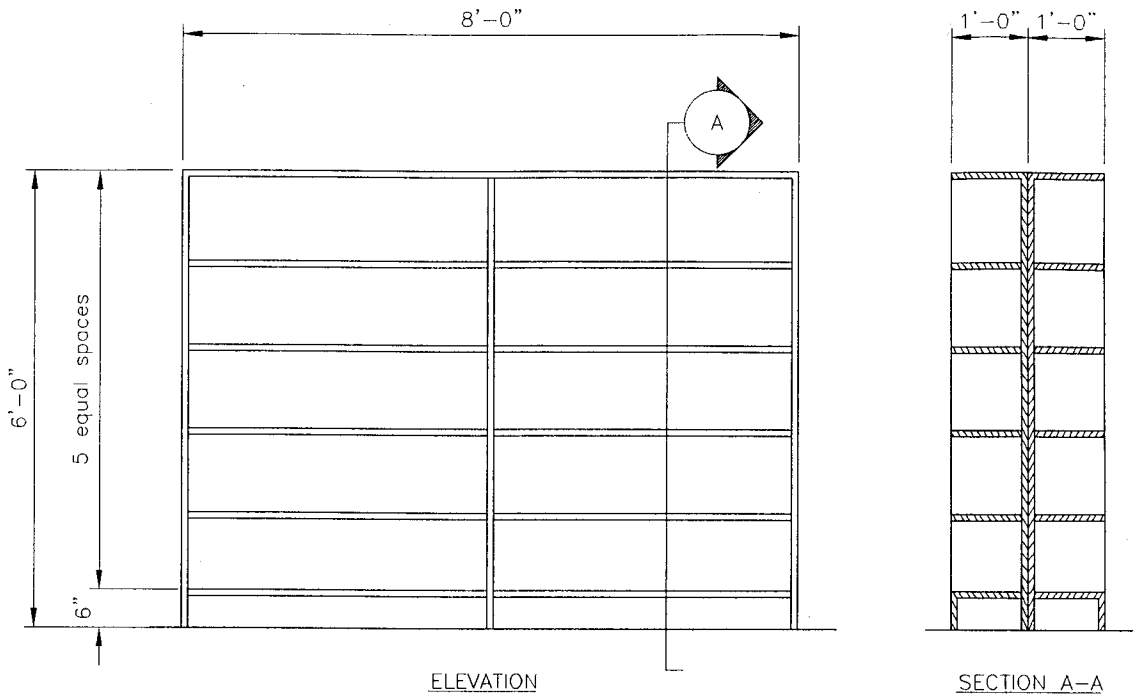

1 ft = 0.305 m
1 in = 25.4 mm

Figure E3-1. Two Free-standing Library Shelves

A. Preliminary Determinations

1. Obtain building and site data:

a. Seismic Use Group. The building is a Standard Occupancy Structure, and from Table 3-1, falls into Seismic Use Group I.

b. Structural Performance Level. The shelves are to be analyzed for the Life Safety Performance Level as described in Table 3-2.

c. Applicable Ground Motions (Performance Objective). The Performance Objective for the shelves is determined to be 1A, defined as the combination of Life Safety Performance Level with a ground motion of 2/3 MCE as prescribed for Seismic Use Group I. For this example, the spectral response acceleration is assumed to be as follows:

$$S_{DS} = 2/3\ S_{MS} = 0.90\ g \qquad \text{(TI 809-04 Eq. 3-3)}$$

d. Seismic design category:

Based on Short Period Response Acceleration:

Seismic design category: D (Table 3-4a)

Based on 1 second period Response Acceleration:

Seismic design category: D (Table 3-4b)

B. Preliminary Structural Assessment

Not in scope of this example problem.

C. Structural Screening (Tier 1)

Not in scope of this example problem.

D. Structural Screening (Tier 2)

Not in scope of this example problem.

E. Structural Screening (Tier 3)

Not in scope of this example problem.

F. Preliminary Nonstructural Assessment

Preliminary assessment of the shelves is based upon available drawings and visual inspection of the accessible components. .

1) Exempt Components

Not applicable. The shelves are not considered an exempt component.

2) Classification of Component

The shelves do not constitute a significant life safety hazard and are assigned an importance factor, I_p of 1.0.

3) Disposition

The shelves shall be screened by the Tier 1 evaluation of FEMA 310.

G. Nonstructural Screening (Tier 1)

The shelves have a height-to-depth ratio greater than 4 and are not anchored to the floor or adjacent walls. A Tier 2 evaluation is required.

H. Nonstructural Evaluation (Tier 2)

The library shelves are subjected to a Tier 2 analysis according to the provisions of Section 4.8 of FEMA 310 except as modified by Section 6.3 of this document. Analysis is performed as follows.

Determine Seismic Forces

Select R_p and a_p, factors:

$a_p = 1.0$ (TI 809-04, Table 10-1)
$R_p = 3.0$ (TI 809-04, Table 10-1)

Seismic forces (F_p) shall be determined in accordance with Chapter 6 as follows:

$$F_p = \frac{0.4a_p I_p S_{DS} W_p}{R_p}\left(1+2\frac{x}{h}\right);\ W_p = 1.92\text{ k (8.54 kN)};\ x/h = 0.5 \qquad \text{(TI 809-04, EQ. 10-1)}$$

F_p is not required to be greater than:

$$F_p = 1.6S_{DS}I_pW_p \qquad \text{(TI 809-04, EQ. 10-2)}$$

nor less than:

$$F_p = 0.3S_{DS}I_pW_p \qquad \text{(TI 809-04, EQ. 10-3)}$$

$$F_p = \frac{0.4(1.0)(1.0)0.90(1.92\text{ k})}{3.0}(1+2(0.5)) = 0.24(1.92k) = 0.46\text{ kips (2.05 kN)}$$

$(F_p)_{max} = 1.6(0.90)1.0(1.92k) = 2.77\text{ k} > 0.46\text{ k} = F_p$ **O.K.**

$(F_p)_{min} = 0.3(0.90)1.0(1.92\text{ k}) = 0.52\text{ k} > 0.46\text{ k} = F_p$ **Governs**

$F_p = 0.52$ k (2.3 kN)

Check Overturning Stability of Bookshelves

$Q_u = 0.9D - 1.0Q_E$

$M_{OT} = F_p(h/2) - 0.9W_p(L/2)$

$=0.52k(6'/2) - 0.9(1.92k)(1'/2) = 0.70$ kip-ft (0.95 kN-m) NET OVERTURNING **- Retrofit required**

I. Evaluation Report

The Evaluation Report shall summarize the following as required for this example problem:

1. Building and Site Data

2. Preliminary nonstructural assessment

3. Nonstructural screening

4. Nonstructural evaluation

5. Judgmental Evaluations
A judgmental assessment of the results of the evaluation and a statement of the evaluator's assessment of the level of confidence are to be included as part of the report. The dead load for the bookshelves is not adequate to resist overturning forces from seismic loads. It is determined that the bookshelves require rehabilitation.

6. Rehabilitation strategy/ concept
Rehabilitation concept will involve the addition of seismic bracing elements strapped across the bookshelves and bolted to the roof slab.

J. Rehabilitation Design

The procedures for rehabilitation are outlined below:

1. *Review Evaluation Report and other available data.*

2. *Site Visit.*

3. *Confirming evaluation of existing building (if necessary).*

4. *Prepare alternative structural rehabilitation concepts.*

5. *Rehabilitation design.*

The rehabilitation design follows the procedures laid out in accordance with the provisions of Chapter 7 and 9 of this document and FEMA 302 for the design and detailing of new structural components.

Design new braces:

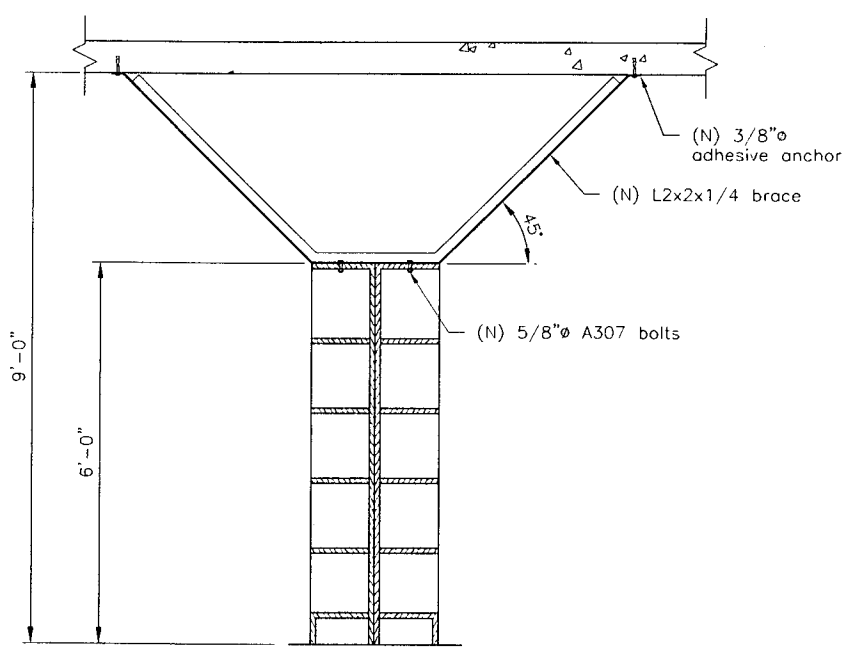

1 ft = 0.305 m

Figure E3-2. Bracing at shelves

Provide 4 braces strapped to top of shelves and bolted to underside of roof slab above.

P_{brace}=1.41(520 lbs)/4 = 183 lbs (814 N)

Try L 2x2x1/4": r_{min}=0.609 in. A=0.938 in.^{2} L_{max} = 36"x$\sqrt{2}$ =51 in.

L/r = 51/0.609 = 84

$\phi_c F_{cr}$ = 9 ksi

$\phi P_n = \phi_c F_{cr}(A)$ = 9(0.938) = 8.42 k per brace (37.5 kN) > 0.183 k (814 N) per brace **O.K.**

Use L2x2x1/4" braces in each direction.

Design connection to slab:

Anchor steel angles to underside of slab with 1-3/8" ϕ adhesive anchor at each side.

Total Demand per bolt = 183 lbs (814 N)

Demand shear per bolt = $183/\sqrt{2}$ = 129 lbs (574 N)

Demand tension per bolt = $183/\sqrt{2}$ = 129 lbs (574 N)

Bolt shear capacity:

Test data and design values for various proprietary post-installed systems are available from various sources, including International Conference of Building Officials (ICBO) reports and in manufacturer's literature.

Because there commonly is a relatively wide scatter in ultimate strengths, common practice is to define working loads as one-quarter of the average of the ultimate test values. Where working load data are defined in this manner, FEMA 273 Sec. C6.4.6.2 recommends using a design strength equal to twice the tabulated working load. Alternatively, where ultimate values are tabulated, it may be appropriate to use a design strength equal to half the tabulated average ultimate value.

For a 3/8" ϕ (9.5 mm) adhesive anchor (ASTM A36) with 3½" (90 mm) embedment depth and minimum spacing requirements satisfied, a working load value of 1110 lbs (4.94 kN) in shear and 1550 lbs (6.89 kN) in tension is obtained from ICBO reports. The design values used are 2 x 1110 lbs = 2220 lbs (9.87 kN) in shear and 2 x 1550 lbs = 3100 lbs (13.8 kN) in tension.

$$\frac{V_u}{V_c}+\frac{P_u}{P_c}=\frac{129}{2220}+\frac{129}{3100}=0.06+0.04=0.10<1.0 \qquad \text{O.K.}$$

Use a 3/8" ϕ adhesive anchor at each brace.

Design connection between brace and shelves

To connect the angles to the braces use 5/8" ϕ (15.9 mm) A307 bolts. From the LRFD Manual Volume II, the design shear strength of a bolt is 5520 lbs (24.6 kN) and the design tensile strength is 10400 lbs (46.3 kN). O.K. by inspection for 129 lbs (574 N) in shear and tension.

APPENDIX F
MECHANICAL AND ELECTRICAL COMPONENT EXAMPLES

This appendix illustrates the implementation of the provisions of this document for the seismic evaluation and rehabilitation of nonstructural mechanical and electrical components in military buildings. The examples in the following sections of this appendix were selected to demonstrate the application of various rehabilitation techniques to mitigate seismic deficiencies identified in typical mechanical and electrical components in existing military buildings.

F1. Electrical Control Panel

F2. Emergency Motor Generator

F3. Suspended Chiller Unit

DESIGN EXAMPLE PROBLEM F1: Electrical Control Panel

Description

This example consists of the evaluation and bracing of a free-standing electrical control panel on the ground floor of a two-story Seismic Use Group IIIE building.

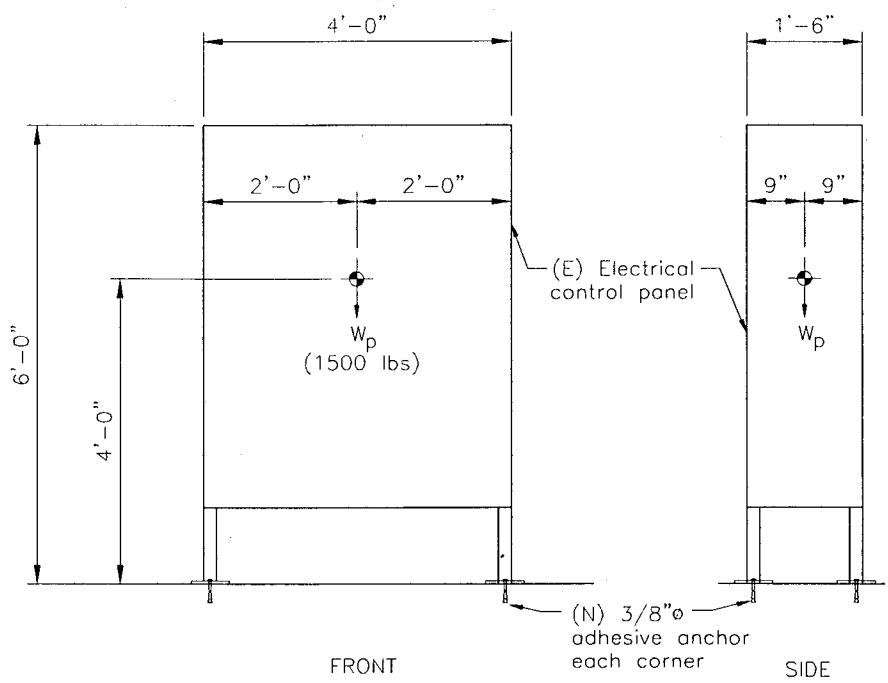

1 lb = 4.448 N
1 ft = 0.305 m
1 in = 25.4 mm

Figure F1-1. Electrical Control Panel

A. Preliminary Determinations

1. Obtain building and site data:

a. Seismic Use Group. The building is assumed from the problem statement to be Seismic Use Group IIIE.

b. Structural Performance Level. The electric panels are to be analyzed for the Immediate Occupancy Performance Level as described in Table 3-2.

c. Applicable Ground Motions (Performance Objective). The Performance Objective for the electric panels is determined to be 3B, defined as the combination of Immediate Occupancy Performance Level with a ground motion of 3/4 MCE as prescribed for Seismic Use Group IIIE. For this example, the spectral response acceleration is assumed to be as follows:

$$S_{DS} = 2/3\ S_{MS} = 0.90\ g \qquad \text{(TI 809-04 Eq. 3-3)}$$

d. Seismic design category:

Based on Short Period Response Acceleration:

Seismic design category: D (Table 3-4a)

Based on 1 second period Response Acceleration:

Seismic design category: D (Table 3-4b)

B. Preliminary Structural Assessment

Not in scope of this example problem.

C. Structural Screening (Tier 1)

Not in scope of this example problem.

D. Structural Screening (Tier 2)

Not in scope of this example problem.

E. Structural Screening (Tier 3)

Not in scope of this example problem.

F. Preliminary Nonstructural Assessment

Preliminary assessment of the electrical panel is based upon available drawings and visual inspection of the accessible components.

1) Exempt Components

Not applicable. The panels are not considered an exempt component.

2) Classification of Component

The panel controls electrical circuits that must be functional during and following a severe earthquake. The panel is therefore assigned an importance factor, I_p of 1.5.

3) Disposition

The panels shall be screened by the Tier 1 evaluation of FEMA 310.

G. Nonstructural Screening (Tier 1)

The electrical panel is free-standing. A Tier 2 evaluation is required to check if it needs anchorage to the floor.

H. Nonstructural Evaluation (Tier 2)

The electrical panel is subjected to a Tier 2 analysis according to the provisions of Section 4.8 of FEMA 310 except as modified by Section 6.3 of this document. Analysis is performed as follows.

Determine Seismic Forces

Select R_p and a_p, factors:

$a_p = 2.5$ (TI 809-04, Table 10-1)
$R_p = 3.0$ (TI 809-04, Table 10-1)

Seismic forces (F_p) shall be determined in accordance with Chapter 6 as follows:

$$F_p = \frac{0.4 a_p I_p S_{DS} W_p}{R_p}\left(1 + 2\frac{x}{h}\right); \; W_p = 1500 \text{ lbs } (6.67 \text{ kN}), \; x/h = 0 \qquad \text{(TI 809-04, EQ. 10-1)}$$

F_p is not required to be greater than:

$$F_p = 1.6 S_{DS} I_p W_p \qquad \text{(TI 809-04, EQ. 10-2)}$$

nor less than:

$$F_p = 0.3 S_{DS} I_p W_p \qquad \text{(TI 809-04, EQ. 10-3)}$$

$$F_p = \frac{0.4(2.5)(1.5)0.90(1500\text{lbs})}{3.0}(1 + 2(0)) = 0.45(1500\text{lbs}) = 675 \text{ lbs } (3.0 \text{ kN})$$

$(F_p)_{max} = 1.6(0.90)1.5(1500\text{lbs}) = 3240 \text{ lbs} > 675 \text{ lbs} = F_p$ **O.K.**

$(F_p)_{min} = 0.3(0.90)1.5(1500 \text{ lbs}) = 610 \text{ lbs} < 675 \text{ lbs} = F_p$ **O.K.**

$\therefore \; F_p = 675 \text{ lbs } (3.0 \text{ kN})$

Check Overturning of Electrical Panel

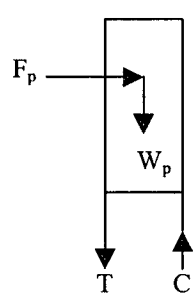

$Q_u = 0.9D - 1.0Q_E$

$M_{OT} = F_p(ht) - 0.9W_p(L/2)$

=675lbs(4') – 0.9(1500)(0.75) = 1690 lbs-ft (2.29 kN-m) NET OVERTURNING
Anchorage required to resist overturning.

I. Evaluation Report

The Evaluation Report shall summarize the following as required for this example problem:

1. Building and Site Data

2. Preliminary nonstructural assessment

3. Nonstructural screening

4. Nonstructural evaluation

5. Judgmental Evaluations

A judgmental assessment of the results of the evaluation and a statement of the evaluator's assessment of the level of confidence are to be included as part of the report. The dead load for the electrical panel is not adequate to resist sliding and overturning forces from seismic loads. It is determined that the electrical panel requires rehabilitation.

6. Rehabilitation strategy/ Concept

The rehabilitation will require the addition of anchor bolts drilled into the concrete to resist the seismic forces.

J. Rehabilitation Design

The procedures for rehabilitation are outlined below:

1. Review Evaluation Report and other available data.

2. Site Visit.

3. Confirming evaluation of existing building (if necessary).

4. Prepare alternative structural rehabilitation concepts.

5. Rehabilitation design.

The rehabilitation design follows the procedures laid out in accordance with the provisions of Chapter 7 and 9 of this document and FEMA 302 for the design and detailing of new structural components. A detailed analysis follows.

Design Anchor bolts:

T=C=M/L = 1690 lbs / 1.5' = 1130 lbs (5.03 kN)

For 2 bolts, tension load per bolt = 1130 lbs/2 = 565 lbs/bolt (2.51 kN)

Shear per bolt = 675 lbs / 4 = 170 lbs (756 N)

Check bolt capacity:

Test data and design values for various proprietary post-installed systems are available from various sources, including International Conference of Building Officials (ICBO) reports and in manufacturer's literature.

Because there commonly is a relatively wide scatter in ultimate strengths, common practice is to define working loads as one-quarter of the average of the ultimate test values. Where working load data are defined in this manner, FEMA 273 Sec. C6.4.6.2 recommends using a design strength equal to twice the tabulated working load. Alternatively, where ultimate values are tabulated, it may be appropriate to use a design strength equal to half the tabulated average ultimate value.

For a 3/8" (9.5 mm) ϕ adhesive anchor (ASTM A36) with 3½" (89 mm) embedment depth and minimum spacing requirements satisfied, an ICBO report provides the following allowable working loads:

Shear: 1110 lbs (4.94 kN) > 170 lbs (756 N) **OK**
Tension: 1550 lbs (6.89 kN) > 565 lbs (2.51 kN) **OK**

According to the ICBO report, allowable loads for anchor subjected to combined shear and tension forces are determined by the ratio of the actual shear to the allowable shear, plus the ratio of the actual tension to the allowable tension, not exceeding 1.0.

$$\left[\left(\frac{P_u}{P_c}\right)+\left(\frac{V_u}{V_c}\right)\right] \leq 1.0$$

$$\left[\left(\frac{565}{1712}\right)+\left(\frac{170}{1110}\right)\right] = 0.48 \leq 1.0 \quad \textbf{OK}$$

USE 3/8" ϕ chemical anchor at each corner.

DESIGN EXAMPLE PROBLEM F2: Emergency Motor Generator

Description

This example consists of the evaluation of an emergency motor generator set shown in Figure F2-1 on the ground floor of a 3-story military hospital. The unit has been mounted on four springs for vibration control. The stiffness factor for each spring is 300 lbs/in.

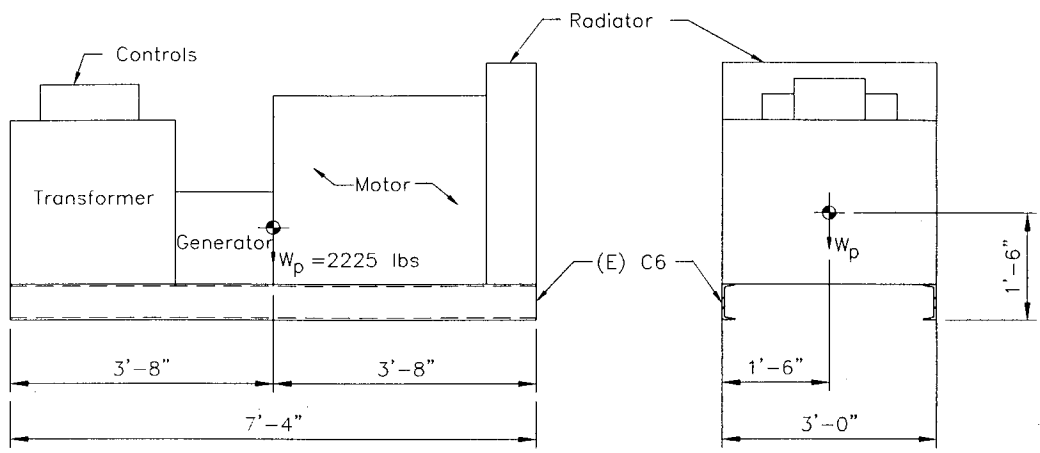

1 in = 25.4 mm
1 ft = 0.305 m

Figure F2-1. Emergency Motor Generator

A. Preliminary Determinations

1. Obtain building and site data:

a. Seismic Use Group. The building is in Seismic Use Group IIIE, Essential Facilities.

b. Structural Performance Level. The performance level prescribed for buildings in Seismic Use Group IIIE is the Immediate Occupancy Performance Level as described in Table 3-2.

c. Applicable Ground Motions (Performance Objective). The Performance Objective is determined to be 3B, defined as the combination of Immediate Occupancy Performance Level with a ground motion of 3/4 MCE as prescribed for Seismic Use Group IIIE. For this example, the spectral response acceleration is assumed to be as follows:

$S_{DS} = 3/4\ S_{MS} = 0.90$ g (TI 809-04 Eq. 3-3)

The design vertical acceleration is assumed to be 2/3 S_{DS} = 0.60 g.

d. Seismic design category:

Based on Short Period Response Acceleration:

Seismic design category: D (Table 3-4a)

Based on 1 second period Response Acceleration:

Seismic design category: D (Table 3-4b)

B. Preliminary Structural Assessment

Not in scope of this example problem.

C. Structural Screening (Tier 1)

Not in scope of this example problem.

D. Structural Screening (Tier 2)

Not in scope of this example problem.

E. Structural Screening (Tier 3)

Not in scope of this example problem.

F. Preliminary Nonstructural Assessment

Preliminary assessment is based upon available drawings and visual inspection of the accessible components.

1) Exempt Components

Not applicable. The generator is not considered an exempt component.

2) Classification of Component

The generator must be operable during and after the design earthquake, and is therefore assigned an importance factor, I_p of 1.5.

3) Disposition

The emergency motor generator shall be screened by the Tier 1 evaluation of FEMA 310.

G. Nonstructural Screening (Tier 1)

The generator is mounted on vibration isolators without restraints or snubbers. Restraints are required to prevent movement in all directions. A Tier 2 evaluation is not available for non-compliant equipment mounted on vibration isolators, and rehabilitation is necessary to achieve the selected performance level.

H. Nonstructural Evaluation (Tier 2)

Not required. Equipment was found to be non-compliant as part of the Tier 1 evaluation, and rehabilitation was recommended.

I. Evaluation Report

The Evaluation Report shall summarize the following as required for this example problem:

1. Building and Site Data

2. Preliminary nonstructural assessment

3. Nonstructural screening

4. Nonstructural evaluation

5. Judgmental Evaluations

With the lack of restraint against lateral and vertical movement, earthquake forces can cause the equipment to fall off its isolaters. Without restraints or snubbers, mitigation is required to achieve the selected performance level.

6. Rehabilitation strategy/ Concept

The rehabilitation will require the design of a horizontal and vertical stop assembly to maintain stability of the isolated unit.

J. Rehabilitation Design

The procedures for rehabilitation are outlined below:

1. Review Evaluation Report and other available data.

2. Site Visit.

3. Confirming evaluation of existing building (if necessary).

4. Prepare alternative structural rehabilitation concepts.

5. Rehabilitation design.

The rehabilitation design follows the procedures laid out in accordance with the provisions of Chapter 7 and 9 of this document and FEMA 302 for the design and detailing of new structural components. A detailed analysis follows.

<u>*Determine Seismic Forces*</u>

Select R_p and a_p, factors:

$a_p = 2.5$ (TI 809-04, Table 10-1)
$R_p = 3.0$ (TI 809-04, Table 10-1)

Seismic forces (F_p) shall be determined in accordance with Chapter 6 as follows:

$$F_p = \frac{0.4 a_p I_p S_{DS} W_p}{R_p}\left(1 + 2\frac{x}{h}\right); \; W_p = 2225 \text{ lbs } (9.90 \text{ kN}) \; ; \; x/h = 0 \qquad \text{(TI 809-04, EQ. 10-1)}$$

F_p is not required to be greater than:

$F_p = 1.6S_{DS}I_pW_p$ (TI 809-04, EQ. 10-2)

nor less than:

$F_p = 0.3S_{DS}I_pW_p$ (TI 809-04, EQ. 10-3)

$$F_{p\text{-}H} = \frac{0.4(2.5)(1.5)0.90(2225\text{lbs})}{3.0}(1+2(0)) = 0.45(2225\text{lbs}) = 1000 \text{ lbs } (4.45 \text{ kN})$$

$(F_{p\text{-}H})_{max} = 1.6(0.90)1.5(2225\text{lbs}) = 4800 \text{ lbs} > 1000 \text{ lbs} = F_{p\text{-}H}$ **O.K.**

$(F_{p\text{-}H})_{min} = 0.3(0.90)1.5(2225 \text{ lbs}) = 900 \text{ lbs} < 1000 \text{ lbs} = F_{p\text{-}H}$ **O.K.**

$\therefore\ F_{p\text{-}H} = 1000 \text{ lbs } (4.45 \text{ kN})$

$F_{p\text{-}V} = (2/3)F_{p\text{-}H} = 667 \text{ lbs } (2.97 \text{ kN})$

Forces at Support

Shear (ΣV_H=0):

V_H=$F_{p\text{-}H}$

V_H=1000 lbs. (4.45 kN)

Overturning (ΣM_0=0):

When gravity and seismic loads are additive:

Load Combination: $Q_u = 1.2D + 1.0Q_E$ (EQ. 7-1)

$C(L) = F_{p\text{-}H}(h_{CG}) + 1.2W_c(L/2) + F_{p\text{-}V}(h_{CG})$

$C(36) = [1000(18)+1.2(2225)(15)+667(18)]$

C=1950 lbs (8.67 kN)

When gravity loads counteract seismic loads (Uplift):

Load Combination : $Q_u = 0.9D - 1.0Q_E$

$T(L) = F_{p\text{-}H}(h_{CG}) - 0.9W_c(L/2) + F_{p\text{-}V}(L/2)$

$T(36) = [1000(18) - 0.9(2225)(15) + 667(15)]$

T=-56 lbs (-249 N) **No Net Uplift**

Forces at top of each support (spring):

$V_{H\text{-}Support}$(at top of support) = 1000/4 = 250 lbs. (1112 N)

C_{down}=1950 lbs (8674 N)

Mitigation

The maximum displacement of the isolater springs subjected to the vertical acceleration shall be calculated and a horizontal and vertical stop assembly designed to maintain stability of the isolated unit. Restraint must be able to resist the vertical and horizontal reactions.

The maximum acceleration experienced by isolator spring with natural period, T, is equal to the vertical spectral acceleration $S_{a\text{-vert}}$, corresponding to the period, T, from a vertical response spectrum provided by a geotechnical engineer.

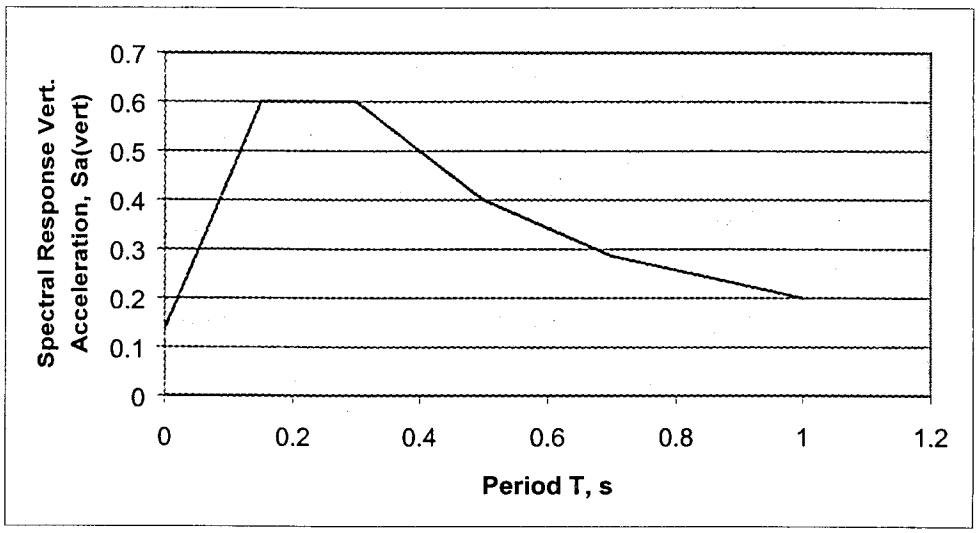

Figure F2-3. Vertical Response Spectrum (provided by Geotechnical Engineer)

Find natural period for vertical translation:

$$T = 2\pi\sqrt{\frac{W}{kg}} = 2\pi\sqrt{\frac{2225\text{lbf} / 4 \text{ springs}}{300\text{lbs} / \text{in.}(386 \text{ in.}/\text{s}^2)}} = 0.44s$$

From vertical response spectrum, $S_{a\,(vert)} = 0.45$ s

For undamped, single-degree-of-freedom system in simple harmonic motion, the spectral displacement, S_d
$= S_a / \omega^2 = S_a(T/2\pi)^2$
$=0.45(386.4 \text{ in/s}^2)\,(0.44/(2\pi))^2 = 0.85$ in (22 mm)

Set gap at 1" (25 mm) to allow for vertical displacement.

A seismic restraint may be designed as shown in Figure F2-1.

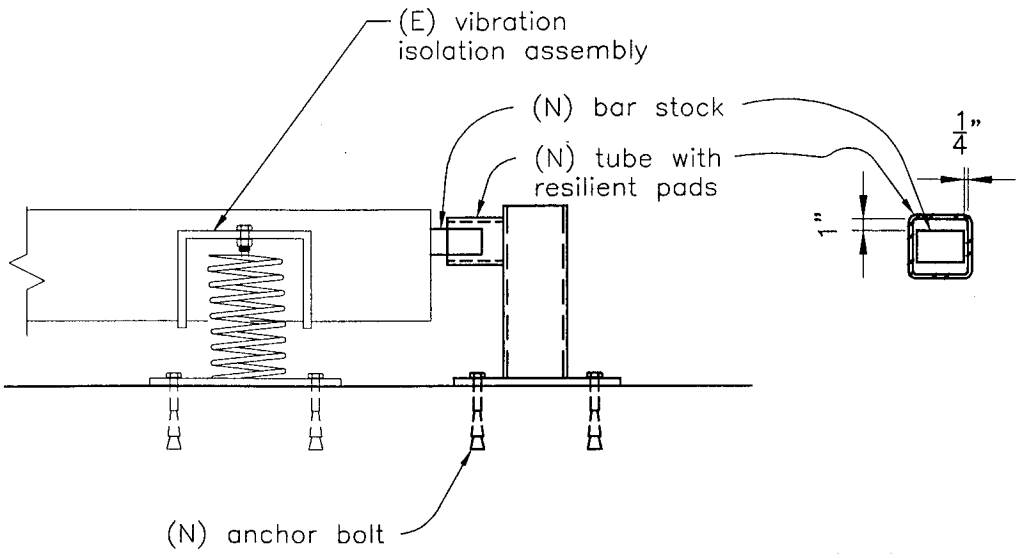

1 in = 25.4 mm

Figure F2-2. Seismic Restraint for Vibration isolated Equipment

Use a total of eight anchor assemblies as shown above, two on each side with TS4x4x1/4 sections welded all around with 3/16" fillet weld to a 1/2" thick 10"x10" base plate with 4 Hilti Kwik bolts.

Check anchor capacity:

It is assumed that only two anchor assemblies would resist the lateral force demand at a time.
Therefore, the shear demand on one anchor assembly = 1000/2 = 500 lbs (2.22 kN)
Shear demand on one anchor bolt = 500/4 = 125 lbs (556 N)

The height of the anchor assembly will be based on the height of the equipment base. It is assumed that the height for this example is 12" (305 mm).
The lateral force on the top of the anchor assembly will force two of the anchor bolts to act in tension.

Tension force on one anchor bolt = {(500lbs/2) x 12"} /7" = 429 lbs (1908 N)

A 3/8" (9.5 mm) ϕ Hilti Kwik Bolt with 4 1/4" (108 mm) embedment depth has the following allowable working loads:

Shear: 1470 lbs (6.53 kN) > 125 lbs (556 N) **OK**
Tension: 1390 lbs (6.18 kN) > 429 lbs (1908 N) **OK**

According to the ICBO report, allowable loads for anchor subjected to combined shear and tension forces are determined by the ratio of the actual shear to the allowable shear, plus the ratio of the actual tension to the allowable tension, not exceeding 1.0.

$$\left[\left(\frac{P_u}{P_c}\right)+\left(\frac{V_u}{V_c}\right)\right] \le 1.0$$

$$\left[\left(\frac{429}{1390}\right)+\left(\frac{125}{1470}\right)\right] = 0.40 \le 1.0 \quad \textbf{OK}$$

USE 4-3/8" ϕ Hilti Kwik bolts at each anchor assembly.

DESIGN EXAMPLE PROBLEM F3: Suspended Chiller Unit

Description

This example consists of the evaluation and retrofit of a chiller that is part of the HVAC system in the 2nd story of a 3-story building. The chiller is suspended by hangar rods from the 3rd floor slab as shown in Figure F3-1.

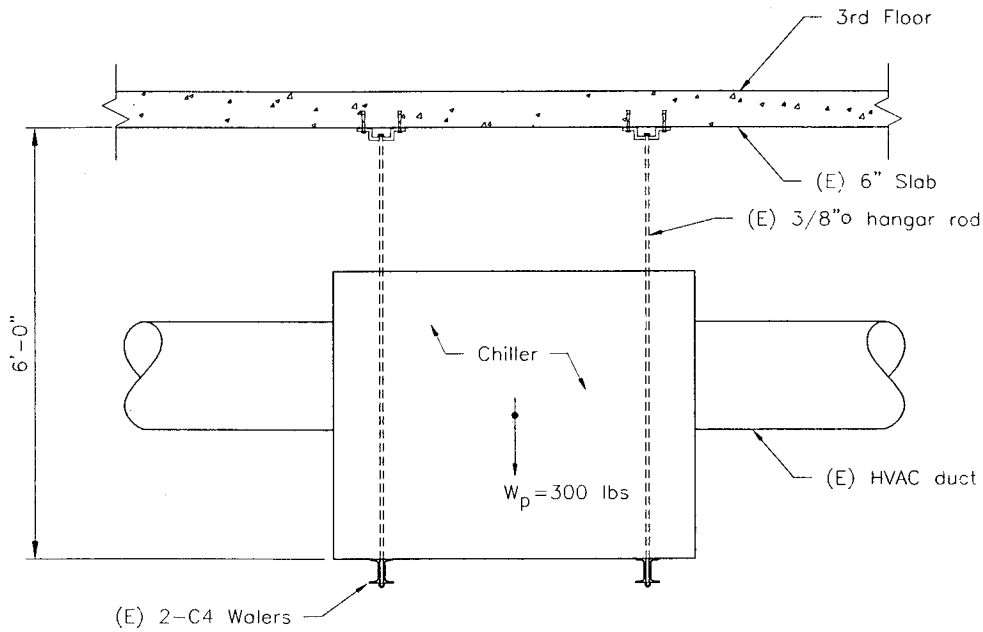

1 ft = 0.305 m
1 in = 25.4 mm
1 lb = 4.448 N

Figure F3-1. Suspended Chiller Unit

A. Preliminary Determinations

1. Obtain building and site data:

a. Seismic Use Group. The building is a Standard Occupancy Building, and from Table 3-1, falls into Seismic Use Group I.

b. Structural Performance Level. The chiller constitutes a life-safety hazard but its failure would not impact any essential function. It is to be analyzed for the Life Safety Performance Level as described in Table 3-2.

c. Applicable Ground Motions (Performance Objective). The Performance Objective is determined to be 1A, defined as the combination of Life Safety Performance Level with a ground motion of 2/3 MCE as prescribed for Seismic Use Group I. For this example, the spectral response acceleration is assumed to be as follows:

$S_{DS} = 3/4\ S_{MS} = 0.80$ g (TI 809-04 Eq. 3-3)

d. Seismic design category:

Based on Short Period Response Acceleration:

Seismic design category: D (Table 3-4a)

Based on 1 second period Response Acceleration:

Seismic design category: D (Table 3-4b)

B. Preliminary Structural Assessment

Not in scope of this example problem.

C. Structural Screening (Tier 1)

Not in scope of this example problem.

D. Structural Screening (Tier 2)

Not in scope of this example problem.

E. Structural Screening (Tier 3)

Not in scope of this example problem.

F. Preliminary Nonstructural Assessment

Preliminary assessment is based upon available drawings and visual inspection of the accessible components.

1) Exempt Components

Not applicable. The chiller is not considered an exempt component.

2) Classification of Component

The chiller constitutes a life-safety hazard but its failure would not impact any essential function. The chiller is therefore assigned an importance factor, I_p of 1.0.

3) Disposition

The chiller shall be screened by the Tier 1 evaluation of FEMA 310.

G. Nonstructural Screening (Tier 1)

The chiller weighs over 20 pounds and is suspended from the ceiling more than 4 feet above the floor. Without bracing, such equipment is non-compliant and mitigation is required. A Tier 2 evaluation is not available for non-compliant suspended equipment; rehabilitation is recommended.

H. Nonstructural Evaluation (Tier 2)

Not required. Equipment was found to be non-compliant as part of the Tier 1 evaluation, and rehabilitation was recommended.

I. Evaluation Report

The Evaluation Report shall summarize the following as required for this example problem:

1. Building and Site Data

2. Preliminary nonstructural assessment

3. Nonstructural screening

4. Nonstructural evaluation

5. Judgmental Evaluations

6. Rehabilitation strategy/ Concept

The rehabilitation will require the design of bracing to laterally support chiller unit from seismic loads.

J. Rehabilitation Design

The procedures for rehabilitation are outlined below:

1. Review Evaluation Report and other available data.

2. Site Visit.

3. Confirming evaluation of existing building (if necessary).

4. Prepare alternative structural rehabilitation concepts.

5. Rehabilitation design.

The rehabilitation design follows the procedures laid out in accordance with the provisions of Chapter 7 and 9 of this document and FEMA 302 for the design and detailing of new structural components. A detailed analysis follows.

<u>*Determine Seismic Forces*</u>

Select R_p and a_p, factors:

$a_p = 1.0$ (TI 809-04, Table 10-1)
$R_p = 3.0$ (TI 809-04, Table 10-1)

Seismic forces (F_p) shall be determined in accordance with Chapter 6 as follows:

$$F_p = \frac{0.4 a_p I_p S_{DS} W_p}{R_p}\left(1 + 2\frac{x}{h}\right) \qquad \text{(TI 809-04, EQ. 10-1)}$$

W_p = 300 lbs (1.33 kN); x/h = 20.5'/36'=0.57 (Assume 12' floor-to-floor height

F_p is not required to be greater than:

$$F_p = 1.6 S_{DS} I_p W_p \qquad \text{(TI 809-04, EQ. 10-2)}$$

nor less than:

$$F_p = 0.3 S_{DS} I_p W_p \qquad \text{(TI 809-04, EQ. 10-3)}$$

$$F_p = \frac{0.4(1.0)(1.0)0.80(300\text{lbs})}{3.0}(1+2(0.57)) = 0.11(300\text{lbs}) = 33 \text{ lbs}$$

$(F_p)_{max} = 1.6(0.80)1.0(300\text{ lbs}) = 384 \text{ lbs}(1.71 \text{ kN}) > 33 \text{ lbs}(147\text{N}) = F_p$ **O.K.**

$(F_p)_{min} = 0.3(0.80)1.0(300 \text{ lbs}) = 72 \text{ lbs}(320 \text{ N}) > 33 \text{ lbs } (147 \text{ N}) = F_p$ **Governs**

$\therefore\ F_p = 72 \text{ lbs } (320 \text{ N})$

Design new braces:

Provide brace in each direction:

P_{brace}=1.41(72 lbs) = 102 lbs (454 N)

Try 2-L's 2x2x1/4": r_{min}=0.609 in. A=1.88 in.^{2} $L_{max} = 72" \text{x}\sqrt{2} = 102$ in.

L/r = 102/0.609 = 167

$\phi_c F_{cr} = 7.65$ ksi

$\phi P_n = \phi_c F_{cr}(A) = 7.65(1.88) = 14.4$ k (64.1 kN) per brace > 0.072 k (320 N) per brace **O.K.**

Use 2-L's 2x2x1/4" braces in each direction.

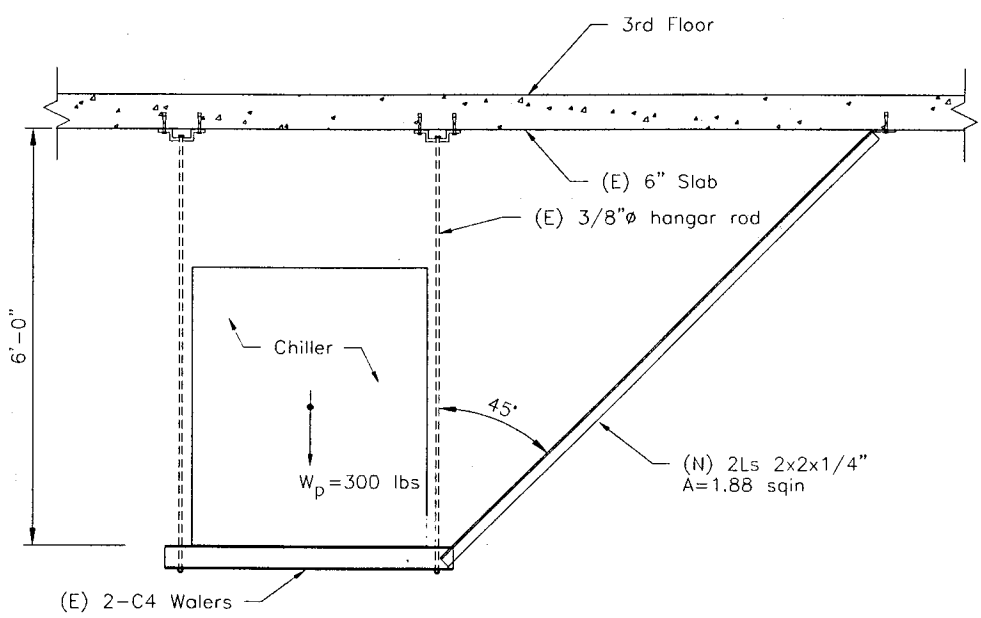

1 ft = 0.305 m
1 in = 25.4 mm
1 lb = 4.448 N

Figure F3-2. Bracing of Suspended Chiller Unit

Design connection to slab:

Anchor steel angles to underside of slab with 1-3/8" ϕ chemical anchor.

Demand shear per bolt = 72 lbs (320 N)

Bolt shear capacity:

Test data and design values for various proprietary post-installed systems are available from various sources, including International Conference of Building Officials (ICBO) reports and in manufacturer's literature.

Because there commonly is a relatively wide scatter in ultimate strengths, common practice is to define working loads as one-quarter of the average of the ultimate test values. Where working load data are defined in this manner, FEMA 273 Sec. C6.4.6.2 recommends using a design strength equal to twice the tabulated working load. Alternatively, where ultimate values are tabulated, it may be appropiate to use a design strength equal to half the tabulated average ultimate value.

For a 3/8" (9.5 mm) ϕ chemical anchor (ASTM A36) with 1 ¾" (44.5 mm) embedment depth and minimum spacing requirements satisfied, a working load value of 935 lbs is obtained from ICBO reports, and a design value of 2 x 935 lbs = 1870 lbs (8.3 kN) is used.

1870 lbs (8.3 kN) > 72 lbs (320 N) **OK**

USE 3/8" ϕ chemical anchor at each brace.

APPENDIX G
BIBLIOGRAPHY

ACI, 1991, *State-of-the-Art Report on Anchorage to Concrete*, Report No. 355.1R-91, ACI Committee 355, ACI Manual of Concrete Practice, American Concrete Institute, Detroit, Michigan.

AF&PA, 1991a, *National Design Specification for Wood Construction*, American Forest & Paper Association, Washington, D.C.

AF & PA, 1991b, *Design Values for Wood Construction*, supplement to the 1991 Edition National Design Specification, American Forest & Paper Association, Washington, D.C.

AF & PA, 1994, *National Design Specification for Wood Construction*, American Forest & Paper Association, Washington, D.C.

AISC, 1994b, *Manual of Steel Construction, Load and Resistance Factor Design, Volume II, Connections*, American Institute of Steel Construction, Chicago, Illinois.

AISI, 1986, *Specifications of the Design of Cold-Formed Steel Structural Members,* August 10, 1986 edition with December 11, 1989 Addendum, American Iron and Steel Institute, Chicago, Illinois.

APA, 1983, Research Report # 138, American Plywood Association, Tacoma, Washington.

APA, 1988, *Plywood Design Specifications Supplement*, American Plywood Association, Tacoma, Washington.

APA, 1990, Research Report # 154, American Plywood Association, Tacoma, Washington.

API, 1993, *Welded Steel Tanks for Oil Storage,* API STD 650, American Petroleum Institute, Washington, D.C.

ASCE, 1990, *Specifications for the Design of Cold-Formed Steel Stainless Steel Structural Members,* Report No. ASCE-8, American Society of Civil Engineers, New York, New York.

ASME, 1995, *Boiler and Pressure Vessel Code,* including addenda through 1993, American Society of Mechanical Engineers, New York, New York.

ASTM, 1980, *Conducting Strength Tests of Panels for Building Construction,* Report No. ASTM E-72, American Society for Testing Materials, Philadelphia, Pennsylvania.

ASTM, 1992, *Standard Methods for Establishing Structural Grades and Related Allowable Properties for Visually Graded Lumber,* Report No. ASTM D 245, American Society for Testing Materials, Philadelphia, Pennsylvania.

ATC, 1978, *Tentative Provisions for the Development of Seismic Regulations for Buildings*, (Report No. ATC-3-06), Applied Technology Council, Redwood City, California.

ATC, 1981, *Guidelines for the Design of Horizontal Wood Diaphragms*, Report No. ATC-7, Applied Technology Council, Redwood City, California.

ATC, 1982, *An Investigation of the Correlation Between Earthquake Ground Motion and Building Performance,* (Report No. ATC-10), Applied Technology Council, Redwood City, California.

ATC, 1994, *A Critical Review of Current Approaches to Earthquake-Resistant Design*, (Report No. ATC-34), Applied Technology Council, Redwood City, California.

ATC, 1996, *Seismic Evaluation and Retrofit of Concrete Buildings, Volumes 1 and 2*, (Report No. ATC-40), Applied Technology Council, Redwood City, California.

AWWA, 1996, *Welded Steel Tanks for Water Storage,* ANSI/AWWA D100-96, American Water Works Association, Denver, Colorado.

Bertero, V.V., 1996, "State-of-the-Art Report on Design Criteria," *Proceedings of the Eleventh World Conference on Earthquake Engineering*, Acapulco, Mexico.

Bolt, B.A., 1988, *Earthquake* (2nd Edition), W.H. Freeman and Company, New York.

Bolt, B.A., 1993, *Earthquake*, W.H. Freeman and Company, New York.

Chopra, A., 1981, *Dynamics of Structures, A Primer,* Earthquake Engineering Research Institute, Berkeley, California, 126 p.

CISCA, 1990, *Recommendations for Direct-Hung Acoustical and Lay-In Panel Ceilings, Seismic Zones 3-4*, Ceilings and Interior System Construction Association, Deerfield, Illinois.

CISCA, 1991, *Recommendations for Direct-Hung Acoustical and Lay-In Panel Ceilings, Seismic Zones 0-2*, Ceilings and Interior System Construction Association, Deerfield, Illinois.

Clough, R., and Penzien, J., 1993, *Dynamics of Structures,* McGraw-Hill, New York, New York.

Constantinou, M.C., Soong, T.T., and Dargush, G.F., 1996, *Passive Energy Dissipation Systems for Structural Design and Retrofit*, National Center for Earthquake Engineering Research, Buffalo, New York.

Fajfar, P., and Krawinkler, H., (Editors), 1992, *Nonlinear Seismic Analyses and Design of Reinforced Concrete Buildings*, Elsevier Applied Science, London and New York.

Gulkan, P., and Sozen, M. A., 1974, "Inelastic Response of Reinforced Concrete Structures to Earthquake Motions," *Journal of the American Concrete Institute*, Detroit, Michigan.

Hamburger, R. O., and McCormick, D. L., 1994, "Implications of the January 17, 1994, Northridge Earthquake on Tiltup and Masonry Buildings with Wood Roofs," *Proceedings of the Structural Engineers Association of California 63rd Annual Convention,* SEAOC, Sacramento, California.

Krawinkler, H., 1994, "New Trends in Seismic Design Methodology," *Proceedings of the Tenth European Conference in Earthquake Engineering*, Vienna, Austria.

Krawinkler, H., and Nassar, A.A., 1992, "Seismic Design Based on Ductility and Cumulative Damage Demands and Capacities," *Nonlinear Seismic Analyses and Design of Reinforced Concrete Buildings*, Edited by Fajfar, P., and Krawinkler, H., Elsevier Applied Science, London and New York.

Lagorio, H.J., 1990, *Earthquakes, An Architect's Guide to Nonstructural Seismic Hazards*, John Wiley and Sons, Inc., New York, New York.

Lawson, R.S., Vance, V., and Krawinkler, H., 1994, "Nonlinear Static Push-Over Analyses—Why, When, and How?" *Proceedings of the Fifth U.S. Conference in Earthquake Engineering*, Earthquake Engineering Research Institute, Oakland, California. Vol. 1.

Ledbetter, R.H., 1985, *Improvement of Liquefiable Foundation Conditions Beneath Existing Structures*, Technical Report REMR-GT-2, U.S. Army Corps of Engineers, Waterways Experiment Station, Vicksburg, Mississippi.

Mahaney et al, 1993, "The Capacity Spectrum Method for Evaluating Structural Response during the Loma Prieta Earthquake," *Proceedings of the National Earthquake Conference*, Memphis, Tennessee.

Mehrain, M., and Graf, W., 1990, "Dynamic Analysis of Tilt-Up Buildings," *Proceedings of the Fourth U.S. National Conference on Earthquake Engineering,* Palm Springs, California.

Moehle, J.P., 1992, "Displacement-Based Design of RC Structures Subjected to Earthquakes," *Earthquake Spectra*, Earthquake Engineering Research Institute, Oakland, California, Vol. 8, No.3, pp. 403-428.

Moehle, J.P., Nicoletti, J.P., and Lehman, D.E., 1994, "Review of Existing Seismic Research Results, Draft Report to ATC, CUREE, and SEAOC. Earthquake Engineering Research Center, College of Engineering, University of California, Berkeley, California.

MSS, 1993, *Pipe Hangers and Supports: Materials, Design and Manufacture*, SP-58, Manufacturers Standardization Society of the Valve and Fitting Industry, Vienna, Virginia.

Nassar, A.A., and Krawinkler, H., 1991, *Seismic Demands for SDOF and MDOF Systems,* Report No. 95, John A. Blume Earthquake Engineering Center, Department of Civil Engineering, Stanford University, Stanford, California.

Nassar, A.A., Krawinkler, H., and Osteraas, J.D., 1992, "Seismic Design Based on Strength and Ductility Demands," *Proceedings of the Tenth World Conference on Earthquake Engineering*, Madrid, Spain, Vol. 10, pp.5861-5866.

NELMA, 1991, *National Grading Rules for Northeastern Lumber*, Northeastern Lumber Manufacturers Association, Cumberland Center, Maine.

Newmark, N.M. and Rosenbluth, E., 1971, *Fundamentals of Earthquake Engineering*, Prentice-Hall, Englewood Cliffs, New Jersey.

NFPA, 1996, *Standard for the Installation of Sprinkler Systems*, NFPA-13, National Fire Protection Agency, Quincy, Massachusetts.

NFPA, latest edition, NFPA-11, NFPA-12, NFPA-12A, NFPA-12B, NFPA-14, NFPA-16, NFPA-16A, NFPA-17, NFPA-17A, National Fire Protection Agency, Quincy, Massachusetts.

NIST, 1992, U.S. Product Standard PS2-92, *Performance Standard for Wood-Based Structural Use Panels*, National Institute of Standards and Technology, Washington, D.C.

NIST, 1995, U.S. Product Standard PS1-95, *Construction & Industrial Plywood with Typical APA Trademarks*, National Institute of Standards and Technology, Washington, D.C.

NIST, 1986, Voluntary Product Standard P20-70, *American Softwood Lumber Standard*, National Institute of Standards and Technology, Washington, D.C.

Osteraas, J.D., and Krawinkler, J., 1990, *Strength and Ductility Considerations in Seismic Design,* Report No. 90, John A. Blume Earthquake Engineering Center, Department of Civil Engineering, Stanford University, Stanford, California.

Pauley, T., and Priestly, M. J. N., *Seismic Design of Reinforced Concrete and Masonry Buildings*, John Wiley & Sons, New York, New York.

Popov, E., Yang, T., and Grigorian, C., 1993, "New Directions in Structural Seismic Design," *Earthquake Spectra*, Engineering Research Institute, Oakland, California, Vol. 9, No. 4, pp. 845-875.

Qi, X., and Moehle, J.P., 1991, *Displacement Design Approach for Reinforced Concrete Structures Subjected to Earthquakes,* Report No. EERC 91/02, Earthquake Engineering Research Center, Berkeley, California.

Richter, C.F., 1958, *Elementary Seismology*, W.H. Freeman & Company, San Francisco, California.

SAC, 1995, *Interim Guidelines: Evaluation, Repair, Modification and Design of Welded Steel Moment Frame Structures*, Report No. FEMA 267, developed by the SEAOC, ATC, and CUREE Joint Venture (Report No. SAC-95-02) for the Federal Emergency Management Agency, Washington, D.C.

Saiidi, M., and Sozen, M. A., 1981, "Simple Nonlinear Seismic Analysis of RC Structures," *Journal of the Structural Engineering Division*, American Society of Civil Engineers, New York, New York.

SEAOC, 1995, *Vision 2000, Performance Based Seismic Engineering of Buildings*, Prepared by the Structural Engineers Association of California for the California office of Emergency Services, Sacramento, California.

SEAOC, 1996, *Recommended Lateral Force Requirements and Commentary*. Prepared by the Seismology Committee of the Structural Engineers Association of California, Sacramento, California.

Seneviratna, G. D. P. K., 1995, *Evaluation of inelastic MDOF effects for seismic design*, Ph.D. Dissertation, Department of Civil Engineering, Stanford University, Stanford, California.

Seneviratna, G. D. P. K., and Krawinkler, H., 1994, "Strength and Displacement Demands for Seismic Design of Structural Walls," *Proceedings of the Fifth U. S. National Conference on Earthquake Engineering*, Chicago, Illinois.

Sheet Metal Industry Fund of Los Angeles, 1976, *Guidelines for Seismic Restraints of Mechanical Systems*, Los Angeles, California.

SJI, 1990, *Standard Specification, Load Tables and Weight Tables for Steel Joists and Joist Girders*, Steel Joist Institute, 1990 Edition.

SPIB, 1991, *Standard Grading Rules for Southern Pine Lumber*, Southern Pine Inspection Bureau, Pensacola, Florida.

Uang, Chia-M., 1991, "Establishing R (or R_w) and C_d Factors for Building Seismic Provisions," *Journal of the Structural Engineering Division*, American Society of Civil Engineers, New York, New York, Vol. 117, No,1. Pp. 19-28.

Uang, Chia-M,. and Maarouf, A., 1992, "Evaluation of the Displacement Amplification Factor for Seismic Design Codes," *Proceedings of SMIP92, Seminar on Seismological and*

Engineering Implications of Recent String-Motion Data, California Division of Mines and Geology, Sacramento, California, PP.5-1to5-10.

Uniform Building Code, 1994 Edition, International Conference of Building Officials.

United States Geological Survey, 1996, *National Seismic Hazard Maps, Documentation June 1996*, Open-File Report 96-532.

Wallace, J.W., 1995, "Seismic Design of RC Structural Walls, Part I: New Code Format," *Journal of the Structural Engineering Division,* American Society of Civil Engineers, New York, New York, Vol.121, No.1, pp.99-107.

Wood, S. L., 1990, "Shear Strength of Low-Rise Reinforced Concrete Walls," *ACI Structural Journal,* American Concrete Institute, Detroit, Michigan, Vol. 87, No.1, pp.99-107.

Wood, H.O. and Neumann, F., 1931, "Modified Mercalli Intensity Scale of 1931," *Seismological Society of America Bulletin*, v. 53, no. 5, pp. 979-987.

WWPA, 1983, *Western Woods Use Book*, Western Wood Products Association, Portland, Oregon.

WWPA, 1991, *Western Lumber Grading Rules*, Western Wood Products Association, Portland, Oregon.

APPENDIX H
CHECKLISTS FOR UNREINFORCED MASONRY BEARING-WALL BUILDINGS

This appendix contains checklists for Tier 1 structural screening of unreinforced masonry bearing-wall buildings. The checklists are adapted from the Third Ballot version of the proposed ASCE draft standard to replace FEMA 310. References in the checklists pertain to sections and tables in FEMA 310.

H1. Basic Structural Checklist for Building Type URM: Unreinforced Masonry Bearing-Wall Buildings with Flexible Diaphragms.

H2. Supplemental Structural Checklist for Building Type URM: Unreinforced Masonry Bearing-Wall Buildings with Flexible Diaphragms.

H3. Basic Structural Checklist for Building Type URMA: Unreinforced Masonry Bearing-Wall Buildings with Stiff Diaphragms.

H4. Supplemental Structural Checklist for Building Type URMA: Unreinforced Masonry Bearing-Wall Buildings with Stiff Diaphragms.

H1. Basic Structural Checklist for Building Type URM: Unreinforced Masonry Bearing-Wall Buildings with Flexible Diaphragms

This Basic Structural Checklist shall be completed when required by Table 3-2.

Each of the evaluation statements on this checklist shall be marked compliant (C), non-compliant (NC), or not applicable (N/A) for a Tier 1 Evaluation. Compliant statements identify issues that are acceptable according to the criteria of this standard, while non-compliant statements identify issues that require further investigation. Certain statements may not apply to the buildings being evaluated. For non-compliant evaluation statements, the design professional may choose to conduct further investigation using the corresponding Tier 2 evaluation procedure; the section numbers in parentheses following each evaluation statement correspond to Tier 2 evaluation procedures.

Basic Structural Checklist for Building Type URM

These buildings have bearing walls that consist of unreinforced (or lightly reinforced) brick or concrete block masonry. Wood floor and roof framing consists of wood joists, glulam beams, and wood posts or small steel columns. Steel floor and roof framing consists of steel beams or open-web joists, steel girders, and steel columns. Lateral forces are resisted by the reinforced brick or concrete block masonry shear walls. Diaphragms consist of straight or diagonal wood sheathing, plywood, or untopped metal deck, and are flexible relative to the walls. Foundations consist of brick or concrete spread footings.

Building System

C	NC		LOAD PATH: The structure shall contain one complete load path for Life Safety for seismic force effects from any horizontal direction that serves to transfer the inertial forces from the mass to the foundation (Tier 2: Sec. 4.3.1.1).
C	NC	N/A	ADJACENT BUILDINGS: An adjacent building shall not be located next to the structure being evaluated closer than 4% of the height of the shorter building for Life Safety (Tier 2: Sec. 4.3.1.2).
C	NC	N/A	MEZZANINES: Interior mezzanine levels shall be braced independently from the main structure, or shall be anchored to the lateral-force-resisting elements of the main structure (Tier 2: Sec. 4.3.1.3).
C	NC	N/A	WEAK STORY: The strength of the lateral-force-resisting system in any story shall not be less than 80% of the strength in an adjacent story above or below for Life-Safety (Tier 2: Sec. 4.3.2.1).
C	NC	N/A	SOFT STORY: The stiffness of the lateral-force-resisting system in any story shall not be less than 70% of the stiffness in an adjacent story above or below, or less than 80% of the average stiffness of the three stories above or below for Life Safety (Tier 2: Sec. 4.3.2.2).
C	NC	N/A	GEOMETRY: There shall be no changes in horizontal dimensions of the lateral-force-resisting system of more than 30% in a story relative to adjacent stories for Life Safety, excluding one-story penthouses (Tier 2: Sec. 4.3.2.3).

C	NC	N/A	VERTICAL DISCONTINUITIES: All vertical elements in the lateral-force-resisting system shall be continuous to the foundation (Tier 2: Sec. 4.3.2.4).
C	NC	N/A	MASS: There shall be no change in effective mass more than 50% from one story to the next for Life Safety (Tier 2: Sec. 4.3.2.5).
C	NC	N/A	DETERIORATION OF WOOD: There shall be no signs of decay, shrinkage, splitting, fire damage, or sagging in any of the wood members, and none of the metal accessories shall be deteriorated, broken, or loose (Tier 2: Sec. 4.3.3.1).
C	NC	N/A	MASONRY UNITS: There shall be no visible deterioration of masonry units (Tier 2: Sec. 4.3.3.7).
C	NC	N/A	MASONRY JOINTS: The mortar shall not be easily scraped away from the joints by hand with a metal tool, and there shall be no areas of eroded mortar (Tier 2: Sec. 4.3.3.8).
C	NC	N/A	REINFORCED MASONRY WALL CRACKS: All existing diagonal cracks in wall elements shall be less than 1/8 inch for Life Safety; shall not be concentrated in one location; and shall not form an X pattern (Tier 2: Sec. 4.3.3.10).
			Lateral-Force-Resisting System
C	NC	N/A	REDUNDANCY: The number of lines of shear walls in each principal direction shall be greater than or equal to 2 for Life Safety (Tier 2: Sec. 4.4.2.1.1).
C	NC	N/A	SHEAR STRESS CHECK: The shear stress in the unreinforced masonry shear walls, calculated using the Quick Check procedure of Section 3.5.3.3, shall be less than 30 psi for clay units, and 70 psi for concrete units for Life Safety (Tier 2: Sec. 4.4.2.5.1).
			Connections
C	NC	N/A	WALL ANCHORAGE: Exterior concrete or masonry walls that are dependent on the diaphragm for lateral support shall be anchored for out-of-plane forces at each diaphragm level with steel anchors, reinforcing dowels, or straps that are developed into the diaphragm. Connections shall have adequate strength to resist the connection force calculated in the Quick Check Procedure of Section 3.5.3.7 (Tier 2: Sec. 4.6.1.1).
C	NC	N/A	WOOD LEDGERS: The connection between the wall panels and the diaphragm shall not induce cross-grain bending or tension in the wood ledgers (Tier 2: Sec. 4.6.1.2).
C	NC	N/A	TRANSFER TO SHEAR WALLS: Diaphragms shall be reinforced and connected for transfer of loads to the shear walls for Life Safety (Tier 2: Sec. 4.6.2.1).
C	NC	N/A	GIRDER/COLUMN CONNECTION: There shall be a positive connection utilizing steel plates or straps between the girder and the column support (Tier 2: Sec. 4.6.4.1).

H2. Supplemental Structural Checklist for Building Type URM: Unreinforced Masonry Bearing-Wall Buildings with Flexible Diaphragms

This Supplemental Structural Checklist shall be completed when required by Table 3-2. The Basic Structural Checklist shall be completed prior to completing this Supplemental Structural Checklist.

Lateral-Force-Resisting System

C	NC	N/A	PROPORTIONS: The thickness of masonry walls, supported by flexible diaphragms, shall exceed twice the expected displacement of the diaphragm as calculated by the Quick Check procedure of Section 3.5.3.8 for Life Safety (Tier 2: Sec. 4.4.2.5.2.2).
C	NC	N/A	MASONRY LAY-UP: Filled collar joints of multiwythe masonry walls shall have negligible voids (Tier 2: Sec. 4.4.2.5.3).

Diaphragms

C	NC	N/A	CROSS TIES: There shall be continuous cross ties between diaphragm chords (Tier 2: Sec. 4.5.1.2).
C	NC	N/A	OPENINGS AT SHEAR WALLS: Diaphragm openings immediately adjacent to the shear walls shall be less than 25% of the wall length for Life Safety (Tier 2: Sec. 4.5.1.4).
C	NC	N/A	OPENINGS AT EXTERIOR MASONRY SHEAR WALLS: Diaphragm openings immediately adjacent to exterior masonry shear walls shall not be greater than 8 feet long for Life Safety (Tier 2: Sec. 4.5.1.6).
C	NC	N/A	STRAIGHT SHEATHING: All straight-sheathed diaphragms shall have aspect ratios less than 2 to 1 for Life Safety (Tier 2: Sec. 4.5.2.1).
C	NC	N/A	SPANS: All wood diaphragms with spans greater than 24 feet for Life Safety shall consist of wood structural panels or diagonal sheathing (Tier 2: Sec. 4.5.2.2).
C	NC	N/A	UNBLOCKED DIAPHRAGMS: All unblocked wood structural panel diaphragms shall have horizontal spans less than 40 feet for Life Safety, and shall have aspect ratios less than or equal to 4 to 1 for Life Safety (Tier 2: Sec. 4.5.2.3).
C	NC	N/A	OTHER DIAPHRAGMS: The diaphragm shall not consist of a system other than those described in Section 4.5 (Tier 2: Sec. 4.5.7.1).

Connections

C	NC	N/A	ANCHOR SPACING: Exterior masonry walls shall be anchored to the floor and roof systems at a spacing of 4 feet or less for Life Safety (Tier 2: Sec. 4.6.1.3).
C	NC	N/A	STIFFNESS OF WALL ANCHORS: Anchors of concrete or masonry walls to wood structural elements shall be installed taut, and shall be stiff enough to prevent movement between the wall and the diaphragm (Tier 2: Sec. 4.6.1.5).

H3. Basic Structural Checklist for Building Type URMA: Unreinforced Masonry Bearing-Wall Buildings with Stiff Diaphragms

This Basic Structural Checklist shall be completed when required by Table 3-2.

Each of the evaluation statements on this checklist shall be marked compliant (C), non-compliant (NC), or not applicable (N/A) for a Tier 1 Evaluation. Compliant statements identify issues that are acceptable according to the criteria of this standard, while non-compliant statements identify issues that require further investigation. Certain statements may not apply to the buildings being evaluated. For non-compliant evaluation statements, the design professional may choose to conduct further investigation using the corresponding Tier 2 evaluation procedure; the section numbers in parentheses following each evaluation statement correspond to Tier 2 evaluation procedures.

Basic Structural Checklist for Building Type URMA

These buildings have perimeter bearing walls that consist of unreinforced clay brick masonry. Interior bearing walls, when present, also consist of unreinforced clay brick masonry. Diaphragms are stiff relative to the unreinforced masonry walls and interior framing. In older construction or large, multistory buildings, diaphragms consist of cast-in-place concrete. In regions of low seismicity, more recent construction consists of metal deck and concrete fill supported on steel framing.

Building System

C	NC		LOAD PATH: The structure shall contain one complete load path for Life Safety for seismic force effects from any horizontal direction that serves to transfer the inertial forces from the mass to the foundation (Tier 2: Sec. 4.3.1.1).
C	NC	N/A	MEZZANINES: Interior mezzanine levels shall be braced independently from the main structure, or shall be anchored to the lateral-force-resisting elements of the main structure (Tier 2: Sec. 4.3.1.3).
C	NC	N/A	WEAK STORY: The strength of the lateral-force-resisting system in any story shall not be less than 80% of the strength in an adjacent story above or below for Life-Safety (Tier 2: Sec. 4.3.2.1).
C	NC	N/A	SOFT STORY: The stiffness of the lateral-force-resisting system in any story shall not be less than 70% of the stiffness in an adjacent story above or below, or less than 80% of the average stiffness of the three stories above or below for Life Safety (Tier 2: Sec. 4.3.2.2).
C	NC	N/A	GEOMETRY: There shall be no changes in horizontal dimensions of the lateral-force-resisting system of more than 30% in a story relative to adjacent stories for Life Safety, excluding one-story penthouses (Tier 2: Sec. 4.3.2.3).
C	NC	N/A	VERTICAL DISCONTINUITIES: All vertical elements in the lateral-force-resisting system shall be continuous to the foundation (Tier 2: Sec. 4.3.2.4).
C	NC	N/A	MASS: There shall be no change in effective mass more than 50% from one story to the next for Life Safety (Tier 2: Sec. 4.3.2.5).

C	NC	N/A	TORSION: The distance between the story center of mass and the story center of rigidity shall be less than 20% of the building width in either plan dimension for Life Safety (Tier 2: Sec. 4.3.2.6).
C	NC	N/A	DETERIORATION OF CONCRETE: There shall be no visible deterioration of concrete or reinforcing steel in any of the vertical- or lateral-force-resisting elements (Tier 2: Sec. 4.3.3.4).
C	NC	N/A	MASONRY UNITS: There shall be no visible deterioration of masonry units (Tier 2: Sec. 4.3.3.7).
C	NC	N/A	MASONRY JOINTS: The mortar shall not be easily scraped away from the joints by hand with a metal tool, and there shall be no areas of eroded mortar (Tier 2: Sec. 4.3.3.8).
			Lateral-Force-Resisting System
C	NC	N/A	REDUNDANCY: The number of lines of shear walls in each principal direction shall be greater than or equal to 2 for Life Safety (Tier 2: Sec. 4.4.2.1.1).
C	NC	N/A	SHEAR STRESS CHECK: The shear stress in the unreinforced masonry shear walls, calculated using the Quick Check procedure of Section 3.5.3.3, shall be less than 30 psi for clay units, and 70 psi for concrete units for Life Safety (Tier 2: Sec. 4.4.2.5.1).
			Connections
C	NC	N/A	WALL ANCHORAGE: Exterior concrete or masonry walls that are dependent on the diaphragm for lateral support shall be anchored for out-of-plane forces at each diaphragm level with steel anchors, reinforcing dowels, or straps that are developed into the diaphragm. Connections shall have adequate strength to resist the connection force calculated in the Quick Check Procedure of Section 3.5.3.7 (Tier 2: Sec. 4.6.1.1).
C	NC	N/A	TRANSFER TO SHEAR WALLS: Diaphragms shall be reinforced and connected for transfer of loads to the shear walls for Life Safety (Tier 2: Sec. 4.6.2.1).
C	NC	N/A	GIRDER/COLUMN CONNECTION: There shall be a positive connection utilizing steel plates or straps between the girder and the column support (Tier 2: Sec. 4.6.4.1).

H4. Supplemental Structural Checklist for Building Type URMA: Unreinforced Masonry Bearing-Wall Buildings with Stiff Diaphragms

This Supplemental Structural Checklist shall be completed when required by Table 3-2. The Basic Structural Checklist shall be completed prior to completing this Supplemental Structural Checklist.

Lateral-Force-Resisting System

C NC N/A PROPORTIONS: The height-to-thickness ratio of the shear walls at each story shall be less than the following for Life Safety (Tier 2: Sec. 4.4.2.5.2.1).

Top story of multi-story building	9
First story of multi-story building:	15
All other conditions:	13

C NC N/A MASONRY LAY-UP: Filled collar joints of multiwythe masonry walls shall have negligible voids (Tier 2: Sec. 4.4.2.5.3).

Diaphragms

General

C NC N/A OPENINGS AT SHEAR WALLS: Diaphragm openings immediately adjacent to the shear walls shall be less than 25% of the wall length for Life Safety (Tier 2: Sec. 4.5.1.4).

C NC N/A OPENINGS AT EXTERIOR MASONRY SHEAR WALLS: Diaphragm openings immediately adjacent to exterior masonry shear walls shall not be greater than 8 feet long for Life Safety (Tier 2: Sec. 4.5.1.6).

Connections

C NC N/A ANCHOR SPACING: Exterior masonry walls shall be anchored to the floor and roof systems at a spacing of 4 feet or less for Life Safety (Tier 2: Sec. 4.6.1.3).