BUILDING SEISMIC SAFETY COUNCIL

Of the National Institute of Building Sciences

Program on Improved Seismic Safety Provisions

2000 Edition

NEHRP RECOMMENDED PROVISIONS FOR SEISMIC REGULATIONS FOR NEW BUILDINGS AND OTHER STRUCTURES

Part 1: Provisions (FEMA 368)

The **Building Seismic Safety Council** (BSSC) was established in 1979 under the auspices of the National Institute of Building Sciences as an entirely new type of instrument for dealing with the complex regulatory, technical, social, and economic issues involved in developing and promulgating building earthquake hazard mitigation regulatory provisions that are national in scope. By bringing together in the BSSC all of the needed expertise and all relevant public and private interests, it was believed that issues related to the seismic safety of the built environment could be resolved and jurisdictional problems overcome through authoritative guidance and assistance backed by a broad consensus.

The BSSC is an independent, voluntary membership body representing a wide variety of building community interests. Its fundamental purpose is to enhance public safety by providing a national forum that fosters improved seismic safety provisions for use by the building community in the planning, design, construction, regulation, and utilization of buildings.

To fulfill its purpose, the BSSC: (1) promotes the development of seismic safety provisions suitable for use throughout the United States; (2) recommends, encourages, and promotes the adoption of appropriate seismic safety provisions in voluntary standards and model codes; (3) assesses progress in the implementation of such provisions by federal, state, and local regulatory and construction agencies; (4) identifies opportunities for improving seismic safety regulations and practices and encourages public and private organizations to effect such improvements; (5) promotes the development of training and educational courses and materials for use by design professionals, builders, building regulatory officials, elected officials, industry representatives, other members of the building community, and the public; (6) advises government bodies on their programs of research, development, and implementation; and (7) periodically reviews and evaluates research findings, practices, and experience and makes recommendations for incorporation into seismic design practices.

See the back of the *Commentary* volume for a full description of BSSC activities.

BOARD OF DIRECTION: 2000

Chairman	William W. Stewart, Stewart-Schaberg Architects, Clayton, Missouri
Vice Chairman	Charles Thornton, Ph.D., PE, The Thornton P Tomasetti Group, Inc., New York, New York (representing the Applied Technology Council)
Secretary	Jack Prosek, PE, Turner Construction Company, San Francisco, California (representing the Associated General Contractors of America)
Ex-Officio	Eugene Zeller, PE, City of Long Beach, California
Members	J. Gregg Borchelt, PE, Brick Institute of America, Reston, Virginia; Charles Carter, PE, American Institute of Steel Construction, Chicago, Illinois; Bradford K. Douglas, PE, American Forest and Paper Association, Washington, D.C.; S. K. Ghosh, Ph.D., S. K. Ghosh Associates, Inc., Northbrook, Illinois (representing the Portland Cement Association); Gerald H. Jones, PE, Kansas City, Missouri (representing the National Institute of Building Sciences); Do Y. Kim, PE, Institute for Business and Home Safety, Tampa, Florida (through October 2000); H. S. Lew, Ph.D., PE, National Institute of Standards and Technology, Gaithersburg, Maryland (representing the Interagency Committee for Seismic Safety in Construction); Joseph Nicoletti, PE, URS/John A. Blume and Associates, San Francisco, California (representing the Earthquake Engineering Research Institute); W. Lee Shoemaker, Ph.D., Metal Building Manufacturers Association, Cleveland, Ohio; Howard Simpson, Sc.D., P.E., Simpson, Gumpertz and Heger, Arlington, Massachusetts (representing the National Council of Structural Engineers Associations); Charles Spitz, NCARB, AIA, CSI, Architect/Planner Code Consultant, Wall, New Jersey (representing the American Institute of Architects); John C. Theiss, PE, Theiss Engineers, Inc., St. Louis, Missouri (representing the American Society of Civil Engineers); David Wismer, PE, CBO, Department of Licenses and Inspections, Philadelphia, Pennsylvania (representing the Building Officials and Code Administrators International)
BSSC Staff	Claret M. Heider, Acting Executive Director; Bernard Murphy, PE, Director, Special Projects; Patricia Blasi, Administrative Assistant; Carita Tanner, Administrative Assistant; Kelly Harris, Summer Intern

BSSC Program on Improved Seismic Safety Provisions

NEHRP RECOMMENDED PROVISIONS

(National Earthquake Hazards Reduction Program)

FOR SEISMIC REGULATIONS

FOR NEW BUILDINGS AND

OTHER STRUCTURES

2000 EDITION

Part 1: PROVISIONS
(FEMA 368)

Prepared by the
Building Seismic Safety Council
for the
Federal Emergency Management Agency

BUILDING SEISMIC SAFETY COUNCIL
Washington, D.C.
2001

NOTICE: Any opinions, findings, conclusions, or recommendations expressed in this publication do not necessarily reflect the views of the Federal Emergency Management Agency. Additionally, neither FEMA nor any of its employees make any warranty, expressed or implied, nor assume any legal liability or responsibility for the accuracy, completeness, or usefulness of any information, product, or process included in this publication.

This report was prepared under Contract EMW-97-CO-0481 between the Federal Emergency Management Agency and the National Institute of Building Sciences.

Building Seismic Safety Council activities and products are described at the end of this report. For further information, contact the Building Seismic Safety Council, 1090 Vermont, Avenue, N.W., Suite 700, Washington, D.C. 20005; phone 202-289-7800; fax 202-289-1092; e-mail bssc@nibs.org.

Copies of this report may be obtained by contacting the FEMA Publication Distribution Facility at 1-800-480-2520.

The National Institute of Building Sciences and its Building Seismic Safety Council caution users of these *Provisions* documents to be alert to patent and copyright concerns especially when applying prescriptive requirements.

PREFACE

One of the primary goals of the Federal Emergency Management Agency (FEMA) and the National Earthquake Hazards Reduction Program (NEHRP) is to encourage design and building practices that address the earthquake hazard and minimize the resulting damage. Publication of the 2000 *NEHRP Recommended Provisions for Seismic Regulation of New Buildings and Other Structures* reaffirms the continuing FEMA-sponsored effort to improve the seismic safety of new structures in this country. Its publication marks the fifth in a planned updating of both the *Provisions* documents and several complementary publications. As in the case of the earlier editions of the *Provisions* (1985, 1988, 1991, 1994, and 1997), FEMA is proud to sponsor this Building Seismic Safety Council project and encourages widespread dissemination and voluntary use of this state-of-the-art consensus resource document.

In contrast with the 1997 Provisions update, this update does not make significant changes to the hazard maps or design procedures. Rather, the 2000 *Provisions* contains new material in select areas that keep the document at the cutting edge of seismic design practices. An example of this new material is the addition of a comprehensive procedure for the design of structures with energy dissipating devices. As this new technology gains further acceptance in practice, the design guidance within the *Provisions* will enjoy widespread use. Another example is the inclusion of material on anchorage to concrete. A special anchorage subcommittee was assembled to integrate this much-needed new material into the *Provisions*. A third example is the comprehensive treatment of design of steel moment frame structures based on the research results of a FEMA-funded project started after the 1994 Northridge earthquake. Finally, some new material in the areas of 'pushover' design and simplified design procedures was developed. Further refinement of these two areas is expected during the next update cycle.

The above changes are but a few of the nearly 170 that were balloted by the BSSC member organizations. The number of changes continues to grow over the numbers of earlier update efforts and is testament to the increased attention being paid to the *Provisions.* This is due in large part to the decision to use the NEHRP *Provisions* as the basis for the seismic requirements in both the *International Building Code* and *NFPA 5000 Code*. FEMA welcomes this increased scrutiny and the chance to work with these code organizations.

Looking ahead, FEMA has already contracted with BSSC for and work already has begun on the update process that will lead to the 2003 *Provisions*. The update effort will continue to capture the state of the art, continue work on simplified methods, and seek to improve the treatment of non-building structures within the *Provisions*.

Finally, FEMA wishes to express its deepest gratitude for the yeoman efforts of a large number of volunteer experts and the BSSC Board of Directors and staff who made possible the 2000 *Provisions* documents. It is truly their efforts that make the *Provisions* a reality. Americans unfortunate enough to experience the earthquakes that will inevitably occur in this country in the future will owe much, perhaps even their very lives, to the contributions and dedication of these individuals to the seismic safety of buildings. Without the dedication and hard work of these men and women, this document and all it represents with respect to earthquake risk mitigation would not have been possible.

Federal Emergency Management Agency

INTRODUCTION and ACKNOWLEDGEMENTS

The 2000 Edition of the *NEHRP Recommended Provisions for Seismic Regulations for New Buildings and Other Structures* is the sixth edition of the document and, like the 1985, 1988, 1991, 1994, and 1997 Editions that preceded it, has the consensus approval of the Building Seismic Safety Council membership. It represents a major product of the Council's multiyear, multitask Program on Improved Seismic Safety Provisions and is intended to continue to serve as a source document for use by any interested members of the building community. (For readers unfamiliar with the program, a detailed description of the BSSC's purpose and activities concludes the *Commentary* volume.)

In September 1997, NIBS entered into a contract with FEMA for initiation of the BSSC 2000 *Provisions* update effort. Late in 1997, the BSSC member organization representatives and alternate representatives and the BSSC Board of Direction were asked to identify individuals to serve on the 2000 Provisions Update Committee (PUC) and its Technical Subcommittees (TSs).

The 2000 PUC was constituted early in 1998, and 12 PUC Technical Subcommittees were established to address design criteria and analysis, foundations and geotechnical considerations, cast-in-place/precast concrete structures, masonry structures, steel structures, wood structures, mechanical-electrical systems and building equipment and architectural elements, quality assurance, composite steel and concrete structures, energy dissipation and base isolation, and nonbuilding structures.

More than 200 individuals have participated in the 2000 update effort, and 169 substantive proposals for change were developed. A series of editorial/organizational changes also have been made. All draft TS and PUC proposals for change were finalized in late January 2000. The PUC Chairman presented to the BSSC Board of Direction the PUC's recommendations concerning proposals for change to be submitted to the BSSC member organizations for balloting, and the Board accepted these recommendations.

The first round of balloting concluded in early June 2000. There were 147 items on the official ballot, and a large majority passed; however, many comments were submitted with "no" and "yes with reservations" votes. These comments were compiled for distribution to the PUC, which met in mid-July to review the comments, receive TS responses to the comments and recommendations for change, and formulate its recommendations concerning what items should be submitted to the BSSC member organizations for a second ballot. The PUC directed several of the proposals from the first ballot to be revised requiring them to be reballoted. The PUC deliberations resulted in the decision to recommend to the BSSC Board that 17 items be included in the second ballot. The PUC Chairman subsequently presented the PUC's recommendations to the Board, which accepted those recommendations.

The second round of balloting was completed in early October 2000. Of the 17 proposals, all passed except for one. This had to be revised because of a duplication error. There were also three other proposals developed by the PUC to clarify last minute concerns. The PUC met on the last two days of October to formulate its recommendations to the Board, and the Board subsequently accepted those recommendations.

During the review of the first ballot, there was a request to table the proposals from TS 6 regarding Chapter 8 on Steel. The American Institute of Steel Construction (AISC) was in the process of updating their supplement to AISC Seismic and the PUC expected publication of Supplement No. 2

during the second ballot voting period. If the supplement was published in time for the TS and PUC to review the changes and incorporate the most current information available, it would be beneficial to all. AISC Seismic Supplement No. 2 was published in November 2000. Since the second ballot was already on the street, this drove the necessity to have a third ballot. A fifth proposal for the third ballot was prepared to allow AISC Seismic Supplement No. 2 to be incorporated.

The third ballot was developed to include 5 proposals and all ballots were received by early February 2001. The comments and responses were prepared in time for the PUC Executive Committee to review and accept all proposals in early March 2001. One of the proposals accepted AISC Seismic Supplement No. 2 as a reference document that overrode the necessity for several proposals initially balloted for the Chapter 8 on Steel. The PUC Chair once again presented the recommendations to the BSSC Board of Direction and they were approved. The final versions of the *Provisions* and *Commentary* volumes were developed and the *Provisions* includes, as Appendix A, a summary of the differences between the 1997 and 2000 Editions. Once the documents were edited and supporting information was prepared they were transmitted to FEMA for publication.

In presenting this 2000 Edition of the *Provisions*, the BSSC wishes to acknowledge the accomplishments of the many individuals and organizations involved over the years. The BSSC program resulting in the first four editions of the *Provisions*, the 2000 update effort, and the information development/dissemination activities conducted to stimulate use of the *Provisions* has benefitted from the expertise of hundreds of specialists, many of whom have given freely of their time over many years.

With so many volunteers participating, it is difficult to single out a given number or group for special recognition without inadvertently omitting others without whose assistance the BSSC program could not have succeeded; nevertheless, the 2000 Edition of the *Provisions* would not be complete without at least recognizing the following individuals to whom I, acting on behalf of the BSSC Board of Direction, heartily express sincerest appreciation:

- The members of the BSSC Provisions Update Committee, especially Chairman William Holmes;
- The members of the 12 PUC Technical Subcommittees, the Simplified Design Task Group, and the Anchorage Task Group; and
- Timothy Sheckler, the FEMA Project Officer.

Appreciation also is due to the BSSC staff members, all of whose talents and experience were crucial to conduct of the program.

At this point I, as Chairman, would like to express my personal gratitude to the members of the BSSC Board of Direction and to all those who provided advice, counsel, and encouragement during conduct of the update effort or who otherwise participated in the BSSC program that resulted in the 2000 *NEHRP Recommended Provisions*.

William Stewart, Chairman, BSSC Board of Direction

CONTENTS

Chapter 1 GENERAL PROVISIONS 1
1.1 PURPOSE 1
1.2 SCOPE AND APPLICATION 1
1.2.1 Scope 1
1.2.2 Additions 2
1.2.3 Change of Use 2
1.2.4 Alterations 2
1.2.5 Alternate Materials and Alternate Means and Methods of Construction 3
1.3 SEISMIC USE GROUPS 3
1.3.1 Seismic Use Group III 3
1.3.2 Seismic Use Group II 3
1.3.3 Seismic Use Group I 4
1.3.4 Multiple Use 4
1.3.5 Seismic Use Group III Structure Access Protection 4
1.4 OCCUPANCY IMPORTANCE FACTOR 4

Chapter 2 GLOSSARY AND NOTATIONS 5
2.1 GLOSSARY 5
2.2 NOTATIONS 14

Chapter 3 QUALITY ASSURANCE 33
3.1 SCOPE 33
3.2 QUALITY ASSURANCE 33
3.2.1 Details of Quality Assurance Plan 34
3.2.2 Contractor Responsibility 34
3.3 SPECIAL INSPECTION 34
3.3.1 Piers, Piles, Caissons 34
3.3.2 Reinforcing Steel 34
3.3.3 Structural Concrete 35
3.3.4 Prestressed Concrete 35
3.3.5 Structural Masonry 35
3.3.6 Structural Steel 35
3.3.7 Structural Wood 35
3.3.8 Cold–Formed Steel Framing 36
3.4 TESTING 37
3.4.1 Reinforcing and Prestressing Steel 37
3.4.2 Structural Concrete 37
3.4.3 Structural Masonry 37
3.4.4 Structural Steel 37
3.4.5 Mechanical and Electrical Equipment 37
3.4.6 Seismically Isolated Structures 38
3.5 STRUCTURAL OBSERVATIONS 38
3.6 REPORTING AND COMPLIANCE PROCEDURES 38

Chapter 4 GROUND MOTION 39

4.1 PROCEDURES FOR DETERMINING MAXIMUM CONSIDERED EARTHQUAKE AND DESIGN EARTHQUAKE GROUND MOTION ACCELERATIONS AND RESPONSE SPECTRA 39
4.1.1 Maximum Considered Earthquake Ground Motions 39
4.1.2 General Procedure for Determining Maximum Considered Earthquake and Design Spectral Response Accelerations: 39
4.1.3 Site-Specific Procedure for Determining Ground Motion Accelerations 45
4.2 SEISMIC DESIGN CATEGORY 47
4.2.1 Determination of Seismic Design Category 47
4.2.2 Site Limitation for Seismic Design Categories E and F 48

Chapter 5 STRUCTURAL DESIGN CRITERIA 49
5.1 REFERENCE DOCUMENT: 49
5.2 DESIGN BASIS 49
5.2.1 General 49
5.2.2 Basic Seismic-Force-Resisting Systems 49
5.2.3 Structure Configuration 58
5.2.4 Redundancy 61
5.2.5 Structural Analysis 62
5.2.6 Design and Detailing Requirements 64
5.2.7 Combination of Load Effects 69
5.2.8 Deflection and Drift Limits 70
5.3 INDEX FORCE ANALYSIS PROCEDURE 71
5.4 EQUIVALENT LATERAL FORCE PROCEDURE 71
5.4.1 Seismic Base Shear 71
5.4.2 Period Determination 73
5.4.3 Vertical Distribution of Seismic Forces 75
5.4.4 Horizontal Shear Distribution 75
5.4.5 Overturning 76
5.4.6 Drift Determination and *P*-Delta Effects 77
5.5 MODAL RESPONSE SPECTRUM ANALYSIS PROCEDURE 78
5.5.1 Modeling 79
5.5.2 Modes 79
5.5.3 Modal Properties 79
5.5.4 Modal Base Shear 79
5.5.5 Modal Forces, Deflections, and Drifts 81
5.5.6 Modal Story Shears and Moments 82
5.5.7 Design Values 82
5.5.8 Horizontal Shear Distribution 83
5.5.9 Foundation Overturning 83
5.5.10 P-Delta Effects 83
5.6 LINEAR RESPONSE HISTORY ANALYSIS PROCEDURE 83
5.6.1 Modeling 83
5.6.2 Ground Motion 83
5.6.3 Response Parameters 84
5.7 NONLINEAR RESPONSE HISTORY ANALYSIS 84
5.7.1 Modeling 84
5.7.2 Ground Motion and Other Loading 85

5.7.3 Response Parameters 85
5.7.4 Design Review 85
5.8 SOIL-STRUCTURE INTERACTION EFFECTS 86
5.8.1 General 86
5.8.2 Equivalent Lateral Force Procedure 86
Appendix to Chapter 5
NONLINEAR STATIC ANALYSIS 94

Chapter 6 ARCHITECTURAL, MECHANICAL, AND ELECTRICAL COMPONENTS DESIGN REQUIREMENTS 99
6.1 GENERAL 99
6.1.1 References and Standards 100
6.1.2 Component Force Transfer 102
6.1.3 Seismic Forces 102
6.1.4 Seismic Relative Displacements 103
6.1.5 Component Importance Factor 104
6.1.6 Component Anchorage 105
6.1.7 Construction Documents 105
6.2 ARCHITECTURAL COMPONENT DESIGN 106
6.2.1 General 106
6.2.2 Architectural Component Forces and Displacements 106
6.2.3 Architectural Component 108
6.2.4 Exterior Nonstructural Wall Elements and Connections 108
6.2.5 Out-of-Plane-Bending 109
6.2.6 Suspended Ceilings 109
6.2.7 Access Floors 110
6.2.8 Partitions 111
6.2.9 Steel Storage Racks 111
6.2.10 Glass in Glazed Curtain Walls, Glazed Storefronts, and Glazed Partitions 111
6.3 MECHANICAL AND ELECTRICAL COMPONENT DESIGN 113
6.3.1 General 113
6.3.2 Mechanical and Electrical Component Forces and Displacements 113
6.3.3 Mechanical and Electrical Component Period 114
6.3.4 Mechanical and Electrical Component Attachments 115
6.3.5 Component Supports 115
6.3.6 Component Certification 115
6.3.7 Utility and Service Lines at Structure Interfaces 115
6.3.8 Site-Specific Considerations 115
6.3.9 Storage Tanks 116
6.3.10 HVAC Ductwork 116
6.3.11 Piping Systems 116
6.3.12 Boilers and Pressure Vessels 118
6.3.13 Mechanical Equipment Attachments and Supports 119
6.3.14 Electrical Equipment Attachments and Supports 120
6.3.15 Alternate Seismic Qualification Methods 122
6.3.16 Elevator Design Requirements 122

Chapter 7 FOUNDATION DESIGN REQUIREMENTS 125
7.1 GENERAL 125
7.2 STRENGTH OF COMPONENTS AND FOUNDATIONS 125
7.2.1 Structural Materials 125
7.2.2 Soil Capacities 125
7.3 SEISMIC DESIGN CATEGORIES A AND B 125
7.4 SEISMIC DESIGN CATEGORY C 125
7.4.1 Investigation 125
7.4.2 Pole-Type Structures 126
7.4.3 Foundation Ties 126
7.4.4 Special Pile Requirements 126
7.5 SEISMIC DESIGN CATEGORIES D, E, AND F 127
7.5.1 Investigation 128
7.5.2 Foundation Ties 128
7.5.3 Liquefaction Potential and Soil Strength Loss 128
7.5.4 Special Pile and Grade Beam Requirements 128

Chapter 8 STEEL STRUCTURE DESIGN REQUIREMENTS 133
8.1 REFERENCE DOCUMENTS 133
8.2 SEISMIC REQUIREMENTS FOR STEEL STRUCTURES 133
8.3 SEISMIC DESIGN CATEGORIES A, B, and C 133
8.4 SEISMIC DESIGN CATEGORIES D, E, AND F 133
8.4.1 Modifications to AISC Seismic 134
8.5 COLD-FORMED STEEL SEISMIC REQUIREMENTS 135
8.5.1 Modifications to AISI 135
8.5.2 Modifications to ANSI/ASCE 8-90 135
8.6 LIGHT-FRAMED WALLS 136
8.6.1 Boundary Members 136
8.6.2 Connections 136
8.6.3 Braced Bay Members 136
8.6.4 Diagonal Braces 136
8.6.5 Shear Walls 136
8.7 SEISMIC REQUIREMENTS FOR STEEL DECK DIAPHRAGMS 137
8.8 STEEL CABLES 137

Chapter 9 CONCRETE STRUCTURE DESIGN REQUIREMENTS 139
9.1 REFERENCE DOCUMENTS 139
9.1.1 Modifications to ACI 318 139
9.2 ANCHORING TO CONCRETE 148
9.2.1 Scope 148
9.2.2 Notations and Definitions 149
9.2.3 General Requirements 154
9.2.4 General Requirements for Strength of Structural Anchors 155
9.2.5 Design Requirements for Tensile Loading 157
9.2.6 Design Requirements for Shear Loading 161
9.2.7 Interaction of Tensile and Shear Forces 164
9.2.8 Required Edge Distances, Spacings, and Thicknesses to Preclude

Splitting Failure 164
9.2.9 Installation of Anchors 165
9.3 CLASSIFICATION OF SHEAR WALLS 165
9.3.1 Ordinary Plain Concrete Shear Walls 165
9.3.2 Detailed Plain Concrete Shear Walls 165
9.4 SEISMIC DESIGN CATEGORY A 165
9.5 SEISMIC DESIGN CATEGORY B 165
9.5.1 Ordinary Moment Frames 166
9.6 SEISMIC DESIGN CATEGORY C 166
9.6.1 Seismic-Force-Resisting Systems 166
9.6.2 Discontinuous Members 166
9.6.3 Plain Concrete 166
9.6.4 Anchor Bolts in the Tops of Columns 167
9.7 SEISMIC DESIGN CATEGORIES D, E, OR F 167
9.7.1 Seismic-Force-Resisting Systems 167
9.7.2 Frame Members Not Proportioned to Resist Forces Induced by Earthquake Motions 167

Appendix to Chapter 9
REINFORCED CONCRETE DIAPHRAGMS CONSTRUCTED USING UNTOPPED PRECAST CONCRETE ELEMENTS 168

Chapter 10 COMPOSITE STEEL AND CONCRETE STRUCTURE DESIGN REQUIREMENTS 173
10.1 REFERENCE DOCUMENTS 173
10.2 REQUIREMENTS 173

Chapter 11 MASONRY STRUCTURE DESIGN REQUIREMENTS 175
11.1 GENERAL 175
11.1.1 Scope 175
11.1.2 Reference Documents 175
11.1.3 Definitions 175
11.1.4 Notations 178
11.2 CONSTRUCTION REQUIREMENTS 180
11.2.1 General 180
11.2.2 Quality Assurance 180
11.3 GENERAL REQUIREMENTS 180
11.3.1 Scope 180
11.3.2 Empirical Masonry Design 180
11.3.3 Plain (Unreinforced) Masonry Design 180
11.3.4 Reinforced Masonry Design 181
11.3.5 Seismic Design Category A 181
11.3.6 Seismic Design Category B 181
11.3.7 Seismic Design Category C 181
11.3.8 Seismic Design Category D 182
11.3.9 Seismic Design Categories E and F 183
11.3.10 Properties of Materials 183

11.3.11 Section Properties 185
11.3.12 Headed and Bent-Bar Anchor Bolts 185
11.4 DETAILS OF REINFORCEMENT 190
11.4.1 General 190
11.4.2 Size of Reinforcement 190
11.4.3 Placement Limits for Reinforcement 190
11.4.4 Cover for Reinforcement 190
11.4.5 Development of Reinforcement 191
11.5 STRENGTH AND DEFORMATION REQUIREMENTS 193
11.5.1 General 193
11.5.2 Required Strength 193
11.5.3 Design Strength 193
11.5.4 Deformation Requirements 194
11.6 FLEXURE AND AXIAL LOADS 194
11.6.1 Scope 194
11.6.2 Design Requirements of Reinforced Masonry Members 194
11.6.3 Design of Plain (Unreinforced) Masonry Members 196
11.7 SHEAR 197
11.7.1 Scope 197
11.7.2 Shear Strength 197
11.7.3 Design of Reinforced Masonry Members 197
11.7.4 Design of Plain (Unreinforced) Masonry Members 199
11.8 SPECIAL REQUIREMENTS FOR BEAMS 200
11.9 SPECIAL REQUIREMENTS FOR COLUMNS 200
11.10 SPECIAL REQUIREMENTS FOR SHEAR WALLS 201
11.10.1 Ordinary Plain Masonry Shear Walls 201
11.10.2 Detailed Plain Masonry Shear Walls 201
11.10.3 Ordinary Reinforced Masonry Shear Walls 201
11.10.4 Intermediate Reinforced Masonry Shear Walls 201
11.10.5 Special Reinforced Masonry Shear Walls 201
11.10.6: Flanged Shear Walls 202
11.10.7 Coupled Shear Walls 202
11.11 SPECIAL MOMENT FRAMES OF MASONRY 203
11.11.1 Calculation of Required Strength 203
11.11.2 Flexural Yielding 203
11.11.3 Reinforcement 203
11.11.4 Wall Frame Beams 203
11.11.5 Wall Frame Columns 204
11.11.6 Wall Frame Beam-Column Intersection 205
11.12 GLASS-UNIT MASONRY AND MASONRY VENEER 207
11.12.1 Design Lateral Forces and Displacements 207
11.12.2 Glass-Unit Masonry Design 207
11.12.3 Masonry Veneer Design 207

Chapter 12 WOOD STRUCTURE DESIGN REQUIREMENTS 209
12.1 GENERAL 209
12.1.1 Scope 209
12.1.2 Reference Documents 209

12.1.3 Notations 210
12.2 DESIGN METHODS 210
12.2.1 Engineered Wood Design 210
12.2.2 Conventional Light-Frame Construction 211
12.3 GENERAL DESIGN REQUIREMENTS FOR ENGINEERED WOOD CONSTRUCTION 211
12.3.1 General 211
12.3.2 Shear Resistance Based on Principles of Mechanics 211
12.3.3 Deformation Compatibility Requirements 211
12.3.4 Framing Requirements 211
12.3.5 Sheathing Requirements 211
12.3.6 Wood Members Resisting Horizontal Seismic Forces Contributed by Masonry and Concrete 212
12.4 DIAPHRAGMS AND SHEAR WALLS 212
12.4.1 Diaphragms 212
12.4.2 Shear Walls 215
12.4.3 Perforated Shear Walls 217
12.5 CONVENTIONAL LIGHT-FRAME CONSTRUCTION 220
12.5.1 Scope 220
12.5.2 Braced Walls 225
12.5.3 Detailing Requirements 225
12.6 SEISMIC DESIGN CATEGORY A 228
12.7 SEISMIC DESIGN CATEGORIES B, C, AND D 228
12.7.1 Conventional Light-Frame Construction 229
12.7.2 Engineered Construction 229
12.8 SEISMIC DESIGN CATEGORIES E AND F 229
12.8.1 Limitations 229

Chapter 13 SEISMICALLY ISOLATED STRUCTURES DESIGN REQUIREMENTS 241
13.1 GENERAL 241
13.2 CRITERIA SELECTION 241
13.2.1 Basis for Design 241
13.2.2 Stability of the Isolation System 241
13.2.3 Seismic Use Group 241
13.2.4 Configuration Requirements 241
13.2.5 Selection of Lateral Response Procedure 241
13.3 EQUIVALENT LATERAL FORCE PROCEDURE 243
13.3.1 General 243
13.3.2 Deformation Characteristics of the Isolation System 243
13.3.3 Minimum Lateral Displacements 243
13.3.4 Minimum Lateral Forces 246
13.3.5 Vertical Distribution of Force 247
13.3.6 Drift Limits 248
13.4 DYNAMIC LATERAL RESPONSE PROCEDURE 248
13.4.1 General 248
13.4.2 Isolation System and Structural Elements Below the Isolation System . . . 248
13.4.3 Structural Elements Above the Isolation System 249
13.4.4 Ground Motion 249

13.4.5 Mathematical Model 250
13.4.6 Description of Analysis Procedures 251
13.4.7 Design Lateral Force 251
13.5 LATERAL LOAD ON ELEMENTS OF STRUCTURES AND NONSTRUCTURAL COMPONENTS SUPPORTED BY BUILDINGS 252
13.5.1 General 252
13.5.2 Forces and Displacements 252
13.6 DETAILED SYSTEM REQUIREMENTS 253
13.6.1 General 253
13.6.2 Isolation System 253
13.6.3 Structural System 255
13.7 FOUNDATIONS 255
13.8 DESIGN AND CONSTRUCTION REVIEW 255
13.8.1 General 255
13.8.2 Isolation System 255
13.9 REQUIRED TESTS OF THE ISOLATION SYSTEM 255
13.9.1 General 255
13.9.2 Prototype Tests 256
13.9.3 Determination of Force-Deflection Characteristics 257
13.9.4 Test Specimen Adequacy 258
13.9.5 Design Properties of the Isolation System 258

Appendix to Chapter 13
STRUCTURES WITH DAMPING SYSTEMS 261

Chapter 14 NONBUILDING STRUCTURE DESIGN REQUIREMENTS 291
14.1 GENERAL 291
14.1.1 Scope 291
14.2 REFERENCES 291
14.3 INDUSTRY DESIGN STANDARDS AND RECOMMENDED PRACTICE . . 293
14.4 NONBUILDING STRUCTURES SUPPORTED BY OTHER STRUCTURES . 294
14.4.1 Architectural, Mechanical, and Electrical Components 294
14.5 STRUCTURAL DESIGN REQUIREMENTS 294
14.5.1 Design Basis 294
14.5.2 Rigid Nonbuilding Structures 298
14.5.3 Loads 298
14.5.4 Fundamental Period 299
14.5.5 Drift Limitations 299
14.5.6 Materials Requirements 299
14.5.7 Deflection Limits and Structure Separation 299
14.5.8 Site-Specific Response Spectra 299
14.6 NONBUILDING STRUCTURES SIMILAR TO BUILDINGS 299
14.6.1 General 299
14.6.2 Pipe Racks 299
14.6.3 Steel Storage Racks 300
14.6.4 Electrical Power Generating Facilities 301
14.6.5 Structural Towers for Tanks and Vessels 301
14.6.6 Piers and Wharves 301

14.7 NONBUILDING STRUCTURES NOT SIMILAR TO BUILDINGS 301
14.7.1 General 302
14.7.2 Earth Retaining Structures 302
14.7.3 Tanks and Vessels 302
14.7.4 Stacks and Chimneys 320
14.7.5 Amusement Structures 320
14.7.6 Special Hydraulic Structures 320
14.7.7 Secondary Containment Systems 321

Appendix to Chapter 14
ELECTRICAL TRANSMISSION, SUBSTATION, AND DISTRIBUTION STRUCTURES 322

Appendix A DIFFERENCES BETWEEN THE 1997 AND THE 2000 EDITIONS OF THE *NEHRP RECOMMENDED PROVISIONS* 327

Appendix B PARTICIPANTS IN THE BSSC 2000 *PROVISIONS* UPDATE PROGRAM 345

Chapter 1

GENERAL PROVISIONS

1.1 PURPOSE: The *NEHRP Recommended Provisions for Seismic Regulations for New Buildings and Other Structures* (referred to hereinafter as the *Provisions*) present criteria for the design and construction of *structures* to resist earthquake ground motions. The purposes of the *Provisions* are as follows:

1. To provide minimum design criteria for *structures* appropriate to their primary function and use considering the need to protect the health, safety, and welfare of the general public by minimizing the earthquake-related risk to life and
2. To improve the capability of *essential facilities* and *structures* containing substantial quantities of hazardous materials to function during and after *design earthquakes*.

The *design earthquake ground motion* levels specified herein could result in both structural and nonstructural damage. For most *structures* designed and constructed according to the *Provisions*, structural damage from the *design earthquake ground motion* would be repairable although perhaps not economically so. For *essential facilities*, it is expected that the damage from the *design earthquake ground motion* would not be so severe as to preclude continued occupancy and function of the facility. The actual ability to accomplish these goals depends upon a number of factors including the structural framing type, configuration, materials, and as-built details of construction. For ground motions larger than the design levels, the intent of the *Provisions* is that there be a low likelihood of structural collapse.

1.2 SCOPE AND APPLICATION:

1.2.1 Scope: The *Provisions* shall apply to the design and construction of *structures* including *additions*, change of use, and *alterations* to resist the effects of earthquake motions. Every *structure*, and portion thereof, shall be designed and constructed to resist the effects of earthquake motions as prescribed by the *Provisions*.

Exceptions:

1. Detached one- and two-family dwellings in *Seismic Design Categories* A, B, and C are exempt from all requirements of the *Provisions*.
2. Detached one- and two-family wood frame dwellings that are designed and constructed in accordance with the conventional light frame construction requirements in Sec. 12.5 are exempt from all other requirements of the *Provisions*.
3. Agricultural storage *structures* intended only for incidental human occupancy are exempt from all requirements of the *Provisions*.
4. *Structures* located where S_1 is less than or equal to 0.04 and S_s is less than or equal to 0.15 shall only be required to comply with Sec. 5.2.5 and Sec. 5.2.6.1 and tanks in

Seismic Use Group III according to Table 14.5.1.2 also shall comply with the freeboard requirements of Sec. 14.7.3.6.1.2.

1.2.2 Additions: *Additions* shall be designed and constructed in accordance with Sec. 1.2.2.1 and 1.2.2.2:

1.2.2.1: An *addition* that is structurally independent from an existing *structure* shall be designed and constructed as required for a new *structure* in accordance with Sec. 1.2.1.

1.2.2.2: An *addition* that is not structurally independent from an existing *structure* shall be designed and constructed such that the entire *structure* conforms to the seismic-force-resistance requirements for new *structures* unless all of the following conditions are satisfied:

1. The *addition* conforms with the requirements for new *structures*, and
2. The *addition* does not increase the *seismic forces* in any structural element of the existing *structure* by more than 5 percent, unless the capacity of the element subject to the increased forces is still in compliance with the *Provisions*, and
3. The *addition* does not decrease the seismic resistance of any structural element of the existing *structure* to less than that required for a new *structure*.

1.2.3 Change of Use: When a change of use results in a *structure* being reclassified to a higher *Seismic Use Group*, the *structure* shall conform to the requirements of Section 1.2.1 for a new *structure*.

Exception: When a change of use results in a *structure* being reclassified from *Seismic Use Group* I to *Seismic Use Group* II, compliance with the *Provisions* is not required if the *structure* is located where S_{DS} is less than 0.3.

1.2.4 Alterations: *Alterations* are permitted to be made to any *structure* without requiring the *structure* to comply with the *Provisions* provided the *alterations* conform to the requirements for a new *structure*. *Alterations* that increase the *seismic force* in any existing structural element by more then 5 percent or decrease the design strength of any existing structural element to resist *seismic forces* by more than 5 percent shall not be permitted unless the entire *seismic-force-resisting system* is determined to conform to the *Provisions* for a new *structure*. All *alterations* shall conform to the *Provisions* for a new *structure.*

Exception: *Alterations* to existing structural elements or *additions* of new structural elements that are not required by these *Provisions* and are initiated for the purpose of increasing the strength or stiffness of the *seismic-force-resisting system* of an existing *structure* need not be designed for forces conforming to these *Provisions* provided that an engineering analysis is submitted indicating the following:

1. The design strengths of existing structural elements required to resist *seismic forces* is not reduced,
2. The *seismic force* on existing structural elements is not increased beyond their design strength,

3. New structural elements are detailed and connected to the existing structural elements as required by the *Provisions*, and
4. New or relocated nonstructural elements are detailed and connected to existing or new structural elements as required by the *Provisions*.

1.2.5 Alternate Materials and Alternate Means and Methods of Construction: Alternate materials and alternate means and methods of construction to those prescribed in the *Provisions* are permitted if approved by the authority having jurisdiction. Substantiating evidence shall be submitted demonstrating that the proposed alternate, for the purpose intended, will be at least equal in strength, durability, and seismic resistance.

1.3 SEISMIC USE GROUPS: All *structures* shall be assigned to one of the *Seismic Use Groups* described in Sec 1.3.1 through 1.3.3.

1.3.1 Seismic Use Group III: *Seismic Use Group* III *structures* are those having *essential facilities* that are required for post-earthquake recovery and those containing substantial quantities of hazardous substances including:

1. Fire, rescue, and police stations
2. Hospitals
3. Designated medical facilities having emergency treatment facilities
4. Designated emergency preparedness centers
5. Designated emergency operation centers
6. Designated emergency shelters
7. Power generating stations or other utilities required as emergency back-up facilities for *Seismic Use Group* III facilities
8. Emergency vehicle garages and emergency aircraft hangars
9. Designated communication centers
10. Aviation control towers and air traffic control centers
11. *Structures* containing sufficient quantities of toxic or explosive substances deemed to be hazardous to the public
12. Water treatment facilities required to maintain water pressure for fire suppression.

1.3.2 Seismic Use Group II: *Seismic Use Group* II *structures* are those that have a substantial public hazard due to occupancy or use including:

1. Covered *structures* whose primary occupancy is public assembly with a capacity greater than 300 persons
2. Educational *structures* through the 12th grade with a capacity greater than 250 persons
3. Day care centers with a capacity greater than 150 persons

4. Medical facilities with greater than 50 resident incapacitated patients not otherwise designated a *Seismic Use Group* III *structure*
5. Jails and detention facilities
6. All *structures* with a capacity greater than 5,000 persons
7. Power generating stations and other public utility facilities not included in *Seismic Use Group* III and required for continued operation
8. Water treatment facilities required for primary treatment and disinfection for potable water
9. Waste water treatment facilities required for primary treatment

1.3.3 Seismic Use Group I: *Seismic Use Group* I *structures* are those not assigned to *Seismic Use Groups* III or II.

1.3.4 Multiple Use: *Structures* having multiple uses shall be assigned the classification of the use having the highest *Seismic Use Group* except in *structures* having two or more portions that are structurally separated in accordance with Sec. 5.2.8, each portion shall be separately classified. Where a structurally separated portion of a *structure* provides access to, egress from, or shares life safety *components* with another portion having a higher *Seismic Use Group*, the lower portion shall be assigned the same rating as the higher.

1.3.5 Seismic Use Group III Structure Access Protection: Where operational access to a *Seismic Use Group* III *structure* is required through an adjacent *structure*, the adjacent *structure* shall conform to the requirements for *Seismic Use Group* III *structures*. Where operational access is less than 10 ft (3 m) from an interior lot line or less than 10 ft (3 m) from another *structure*, access protection from potential falling debris shall be provided by the *owner* of the *Seismic Use Group* III *structure*.

1.4 OCCUPANCY IMPORTANCE FACTOR: An *occupancy importance factor*, *I*, shall be assigned to each *structure* in accordance with Table 1.4.

TABLE 1.4 Occupancy Importance Factors

Seismic Use Group	*I*
I	1.0
II	1.25
III	1.5

Chapter 2

GLOSSARY AND NOTATIONS

2.1 GLOSSARY:

Active Fault: A fault for which there is an average historic slip rate of 1mm per year or more and geographic evidence of seismic activity within Holocene times (past 11,000 years).

Addition: An increase in the *building* area, aggregate floor area, height, or number of stories of a *structure*.

Adjusted Resistance (*D'*): The reference resistance adjusted to include the effects of all applicable adjustment factors resulting from end use and other modifying factors. Time effect factor (λ) adjustments are not included.

Alteration: Any construction or renovation to an existing *structure* other than an *addition*.

Appendage: An architectural *component* such as a canopy, marquee, ornamental balcony, or statuary.

Approval: The written acceptance by the authority having jurisdiction of documentation that establishes the qualification of a material, system, *component*, procedure, or person to fulfill the requirements of the *Provisions* for the intended use.

Architectural Component Support: Those structural members or assemblies of members, including braces, frames, struts and attachments, that transmit all loads and forces between architectural systems, *components*, or elements and the *structure*.

Attachments: Means by which *components* and their supports are secured and connected to the *seismic-force-resisting system* of the structure. Such *attachments* include anchor bolts, welded connections, and mechanical fasteners.

Base: The level at which the horizontal seismic ground motions are considered to be imparted to the *structure*.

Base Shear: Total design lateral force or shear at the *base.*

Basement: A *basement* is any story below the lowest *story* above grade.

Boundary Elements: *Diaphragm* and *shear wall boundary members* to which sheathing transfers forces. *Boundary members* include chords and drag *struts* at *diaphragm* and *shear wall* perimeters, interior openings, discontinuities, and re-entrant corners.

Braced Wall Line: A series of *braced wall panels* in a single *story* that meets the requirements of Sec. 12.5.2.

Braced Wall Panel: A section of *wall* braced in accordance with Sec. 12.5.2.

Building: Any *structure* whose use could include shelter of human occupants.

Boundary Members: Portions along *wall* and *diaphragm* edges strengthened by longitudinal and transverse reinforcement and/or structural steel members.

Cantilevered Column System: A *seismic-force-resisting system* in which lateral forces are resisted entirely by columns acting as cantilevers from the foundation.

Component: A part or element of an architectural, electrical, mechanical, or structural system.

> **Component, Equipment:** A mechanical or electrical *component* or element that is part of a mechanical and/or electrical system within or without a *building* system.
>
> **Component, Flexible:** *Component,* including its *attachments,* having a fundamental period greater than 0.06 sec.
>
> **Component, Rigid:** *Component,* including its *attachments,* having a fundamental period less than or equal to 0.06 sec.

Concrete:

> **Plain Concrete:** *Concrete* that is either unreinforced or contains less reinforcement than the minimum amount specified in ACI 318 for *reinforced concrete.*
>
> **Reinforced Concrete:** *Concrete* reinforced with no less than the minimum amount required by ACI 318, prestressed or non-prestressed, and designed on the assumption that the two materials act together in resisting forces.

Confined Region: The portion of *reinforced concrete component* in which the concrete is confined by closely spaced *special transverse reinforcement* restraining the concrete in directions perpendicular to the applied stress.

Construction Documents: The written, graphic, electronic, and pictorial documents describing the design, locations, and physical characteristics of the project required to verify compliance with the *Provisions*.

Container: A large-scale independent *component* used as a receptacle or a vessel to accommodate plants, refuse, or similar uses.

Coupling Beam: A beam that is used to connect adjacent concrete *wall* piers to make them act together as a unit to resist lateral loads.

Damping Device: A flexible structural element of the *damping* system that dissipates energy due to relative motion of each end of the device. *Damping devices* include all pins, bolts gusset plates, brace extensions, and other components required to connect damping devices to the other elements of the *structure. Damping devices* may be classified as either displacement-dependent or velocity-dependent, or a combination thereof, and may be configured to act in either a linear or nonlinear manner.

Damping System: The collection of structural elements that includes all the individual *damping devices,* all structural elements or bracing required to transfer forces from *damping devices* to the

base of the *structure,* and the structural elements required to transfer forces from damping *devices* to the *seismic-force-resisting system*.

Deformability: The ratio of the ultimate *deformation* to the limit *deformation.*

> **High Deformability Element:** An element whose *deformability* is not less than 3.5 when subjected to four fully reversed cycles at the limit *deformation*.
>
> **Limited Deformability Element:** An element that is neither a low *deformability* nor a high deformability element.

Low Deformability Element: An element whose *deformability* is 1.5 or less.

Deformation:

> **Limit Deformation:** Two times the initial *deformation* that occurs at a load equal to 40 percent of the maximum strength.
>
> **Ultimate Deformation:** The *deformation* at which failure occurs and which shall be deemed to occur if sustainable load reduces to 80 percent or less of the maximum strength.

Design Earthquake Ground Motion: The earthquake effects that *buildings* and *structures* are specifically proportioned to resist as defined in Sec. 4.1.

Design Earthquake: Earthquake effects that are two-thirds of the corresponding *maximum considered earthquake.*

Designated Seismic System: Those architectural, electrical, and mechanical systems and their *components* that require design in accordance with Sec. 6.1 and that have a *component* importance factor (I_p) greater than 1.

Diaphragm: A roof, floor, or other membrane system acting to transfer lateral forces to the vertical resisting elements. *Diaphragms* are classified as either flexible or rigid according to the requirements of Sec. 5.2.3.1 and 12.4.1.1.

Diaphragm, Blocked: A *diaphragm* in which all sheathing edges not occurring on a framing member are supported on and fastened to blocking.

Diaphragm Boundary: A location where shear is transferred into or out of the *diaphragm* sheathing. Transfer is either to a *boundary element* or to another free-resisting element.

Diaphragm Cord: A *diaphragm boundary element* perpendicular to the applied load that is assumed to take axial stresses due to the *diaphragm* moment in a manner analogous to the flanges of a beam. Also applies to *shear walls.*

Displacement:

> **Design Displacement:** The *design earthquake* lateral *displacement,* excluding additional *displacement* due to actual and accidental torsion, required for design of the *isolation system*.

Total Design Displacement: The *design earthquake* lateral *displacement,* including additional *displacement* due to actual and accidental torsion, required for design of the *isolation system* or an element thereof.

Total Maximum Displacement: The *maximum considered earthquake* lateral *displacement*, including additional *displacement* due to actual and accidental torsion, required for verification of the stability of the *isolation system* or elements thereof, design of *structure* separations, and vertical load testing of *isolator unit* prototypes.

Displacement-Dependent Damping Device: The force response of a *displacement-dependent damping device* is primarily a function of the relative displacement between each end of the device. The response is substantially independent of the relative velocity between each end of the device and/or the excitation frequency.

Displacement Restraint System: A collection of structural elements that limits lateral *displacement* of seismically isolated structures due to *maximum* considered *earthquake* ground shaking.

Drag Strut (Collector, Tie, Diaphragm Strut): A *diaphragm* or *shear wall boundary element* parallel to the applied load that collects the transfered *diaphragm* shear forces to the vertical-force-resisting elements or distributes forces within the *diaphragm or shear wall.* A *drag strut* often is an extension of a *boundary element* that transfers forces into the *diaphragm or shear wall.*

Effective Damping: The value of equivalent viscous damping corresponding to energy dissipated during cyclic response of the *isolation system*.

Effective Stiffness: The value of lateral force in the *isolation system*, or an element thereof, divided by the corresponding lateral *displacement.*

Enclosure: An interior space surrounded by *walls.*

Equipment Support: Those structural members or assemblies of members or manufactured elements, including braces, frames, legs, lugs, snuggers, hangers or saddles, that transmit *gravity load* and operating load between the equipment and the *structure.*

Essential Facility: A facility or structure required for post-earthquake recovery.

Factored Resistance ($\lambda\phi$ D): *Reference resistance* multiplied by the time effect and resistance factors. This value must be adjusted for other factors such as size effects, moisture conditions, and other end-use factors.

Flexible Equipment Connections: Those connections between equipment *components* that permit rotational and/or transitional movement without degradation of performance. Examples included universal joints, bellows expansion joints, and flexible metal hose.

Frame:

Braced Frame: An essentially vertical truss, or its equivalent, of the concentric or eccentric type that is provided in a *building frame system* or *dual frame system* to resist shear.

Concentrically Braced Frame (CBF): A *braced frame* in which the members are subjected primarily to axial forces.

Eccentrically Braced Frame (EBF): A diagonally *braced frame* in which at least one end of each brace frames into a beam a short distance from a beam-column joint or from another diagonal brace.

Ordinary Concentrically Braced Frame (OCBF): A steel *concentrically braced frame* in which members and connections are designed in accordance with the provisions of AISC Seismic without modification.

Special Concentrically Braced Frame (SCBF): A steel or composite steel and concrete *concentrically braced frame* in which members and connections are designed for ductile behavior

Moment Frame: A frame provided with restrained connections between the beams and columns to permit the frame to resist lateral forces through the flexural rigidity and strength of its members.

Intermediate Moment Frame: A *moment frame* of reinforced concrete meeting the detailing requirements of ACI 318, of structural steel meeting the detailing requirements of AISC Seismic, or of composite construction meeting the requirements of AISC Seismic.

Ordinary Moment Frame: A *moment frame* or reinforced concrete conforming to the requirements of ACI 318 exclusive of Chapter 21, of structural steel meeting the detailing requirements of AISC Seismic or of composite construction meeting the requirements of AISC Seismic

Special Moment Frame: A *moment frame* of reinforced concrete meeting the detailing requirements of ACI 318, of structural steel meeting the detailing requirements of AISC Seismic, or of composite construction meeting the requirements of AISC Seismic.

Frame System:

Building Frame System: A structural system with an essentially complete *space frame system* providing support for vertical loads. Seismic-force resistance is provided by *shear walls* or *braced frames.*

Dual Frame System: A structural system with an essentially complete *space frame system* providing support for vertical loads. Seismic force resistance is provided by a *moment resisting frame* and *shear walls* or *braced frames* as prescribed in Sec. 5.2.2.1

Space Frame System: A structural system composed of interconnected members, other than *bearing walls*, that is capable of supporting vertical loads and that also may provide resistance to shear.

Glazed Curtain Wall: A *nonbearing wall* that extends beyond the edges of the building floor slabs and includes a glazing material installed in the curtain wall framing.

Glazed Storefront: A *nonbearing wall* that is installed between floor slabs typically including entrances and includes a glazing material installed in the storefront framing.

Grade Plane: A reference plane representing the average of the finished ground level adjoining the *structure* at the exterior *walls*. Where the finished ground level slopes away from the exterior walls, the reference plane shall be established by the lowest points within the area between the *buildings* and the lot line or, where the lot line is more than 6 ft (1829 mm) from the *structure,* between the *structure* and a point 6 ft (1829 mm) from the *structure*.

Hazardous Contents: A material that is highly toxic or potentially explosive and in sufficient quantity to pose a significant life-safety threat to the general public if an uncontrolled release were to occur.

High Temperature Energy Source: A fluid, gas, or vapor whose temperature exceeds 220 degrees F (378 K).

Inspection, Special: The observation of the work by the *special inspector* to determine compliance with the approved *construction documents* and the *Provisions*.

> **Continuous Special Inspection:** A full-time observation of the work by an approved *special inspector* who is present in the area where work is being performed.
>
> **Periodic Special Inspection:** The part-time or intermittent observation of the work by an approved *special inspector* who is present in the area where work has been or is being performed.

Inspector, Special (who shall be identified as the Owner's Inspector): A person approved by the authority having jurisdiction as being qualified to perform *special inspection* required by the approved *quality assurance plan.* The quality assurance personnel of a fabricator is permitted to be approved by the authority having jurisdiction as a *special inspector*.

Inverted Pendulum Type Structures: *Structures* that have a large portion of their mass concentrated near the top and, thus, have essentially one degree of freedom in horizontal translation. The *structures* are usually T-shaped with a single column supporting the beams or framing at the top.

Isolation Interface: The boundary between the upper portion of the *structure,* which is isolated, and the lower portion of the *structure,* which moves rigidly with the ground.

Isolation System: The collection of structural elements that includes all individual *isolator units,* all structural elements that transfer force between elements of the *isolation system,* and all connections to other structural elements. The *isolation system* also includes the *wind-restraint system,* energy-dissipation devices, and/or the *displacement restraint system* if such systems and devices are used to meet the design the requirements of Chapter 13.

Isolator Unit: A horizontally flexible and vertically stiff structural element of the *isolation system* that permits large lateral *deformations* under design seismic load. An *isolator unit* is permitted to be used either as part of or in addition to the weight-supporting system of the *structure.*

Joint: The portion of a *column* bounded by the highest and lowest surfaces of the other members framing into it.

Load:

> **Dead Load:** The *gravity load* due to the weight of all permanent structural and nonstructural *components* of a *building* such as *walls,* floors, roofs, and the operating weight of fixed service equipment.
>
> **Gravity Load (W):** The total *dead load* and applicable portions of other loads as defined in Sec. 5.3.2.
>
> **Live Load:** The load superimposed by the use and occupancy of the *building* not including the wind load, earthquake load, or *dead load*; see Sec. 5.3.

Maximum Considered Earthquake Ground Motion: The most severe earthquake effects considered by the *Provisions* as defined in Sec. 4.1.

Nonbuilding Structure: A *structure,* other than a *building*, constructed of a type included in Chapter 14 and within the limits of Sec. 14.1.1.

Occupancy Importance Factor: A factor assigned to each *structure* according to its *Seismic Use Group* as prescribed in Sec. 1.4.

Owner: Any person, agent, firm, or corporation having a legal or equitable interest in the property.

Partition: A nonstructural interior *wall* that spans from floor to ceiling, to the floor or roof structure immediately above, or to subsidiary structural members attached to the *structure* above.

P-Delta Effect: The secondary effect on shears and moments of structural members induced due to *displacement* of the *structure.*

Quality Assurance Plan: A detailed written procedure that establishes the systems and *components* subject to *special inspection* and testing.

Reference Resistence: The resistence (force or moment as appropriate) of a member or connection computed at the reference end use conditions.

Registered Design Professional: An architect or engineer registered or licensed to practice professional architecture or engineering as defined by statuary requirements of the professional registrations laws of the state in which the project is to be constructed.

Roofing Unit: A unit of roofing material weighing more than 1 pound (0.5 kg).

Seismic Design Category: A classification assigned to a *structure* based on its *Seismic Use Group* and the severity of the *design earthquake ground motion* at the site.

Seismic-Force-Resisting System: That part of the structural system that has been considered in the design to provide the required resistence to the *shear wall* prescribed herein.

Seismic Forces: The assumed forces prescribed herein, related to the response of the *structure* to earthquake motions, to be used in the design of the *structure* and its *components.*

Seismic Response Coefficient: Coefficient C_s as determined from Sec. 5.4.1.

Seismic Use Group: A classification assigned to the *structure* based on its use as defined in Sec. 1.3.

Shallow Anchors: Anchors with embedment length-to-diameter ratios of less than 8.

Shear Panel: A floor, roof, or *wall component* sheathed to act as a *shear wall* or *diaphragm.*

Site Class: A classification assigned to a site based on the types of soils present and their engineering as defined in Sec. 4.1.2.

Site Coefficients: The values of F_a and F_v indicated in Tables 4.1.2.4a and 4.1.2.4b, respectively.

Special Transverse Reinforcement: Reinforcement composed of spirals, closed stirrups, or hoops and supplementary cross-ties provided to restrain the concrete and qualify the portion of the *component,* where used, as a confined region.

Storage Racks: Include industrial pallet racks, moveable shelf racks, and stacker racks made of cold-formed and hot-rolled structural members. Does not include other types of racks such as drive-in and drive-through racks, cantilever racks, portable racks, or racks made of materials other than steel.

Story: The portion of a *structure* between the top to top of two successive finished floor surfaces and, for the topmost story. From the top of the floor finish to the top of the roof structural element.

Story Above Grade: Any *story* having its finished floor surface entirely above grade, except that a *story* shall be considered as the *story above grade* where the finished floor surface of the *story* immediately above is more than 6 ft (1829 mm) above the *grade plane,* more than 6 ft (1829 mm) above the finished ground level for more than 40 percent of the total *structure* perimeter, or more than 12 ft (3658 mm) above the finished ground level at any point. This definition is illustrated in Figure 2.1.

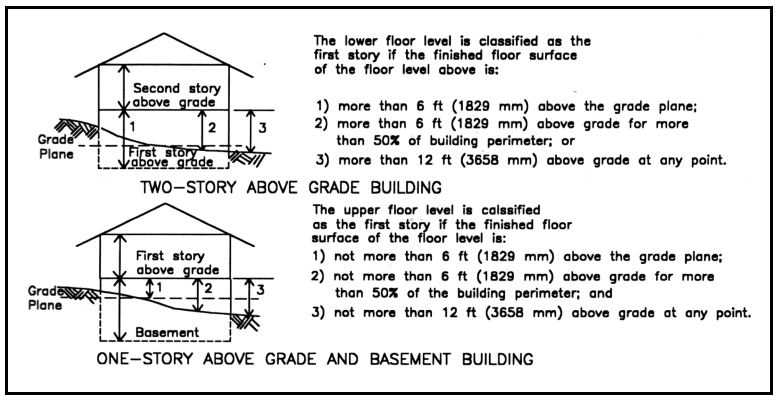

FIGURE 2.1 Definition of story above grade.

Story Drift Ratio: The *story* drift, as determined in Sec. 5.4.6, divided by the *story* height.

Story Shear: The summation of design lateral forces at levels above the *story* under consideration.

Strength:

Design Strength: *Nominal strength* multiplied by the strength reduction factor, ϕ.

Nominal Strength: Strength of a member or cross section calculated in accordance with the requirements and assumptions of the strength design methods of the *Provisions* (or the reference standards) before application of any strength reduction factors.

Required Strength: Strength of a member, cross section, or connection required to resist factored loads or related internal moments and forces in such combinations as stipulated by the *Provisions.*

Structure: That which is built or constructed and limited to *buildings* and *nonbuilding structures* as defined herein.

Structural Observations: The visual observations performed by the *registered design professional* in responsible charge (or another *registered design professional)* to determine that the *seismic-force-resisting system* is constructed in general conformance with the *construction documents.*

Wood Structural Panel: A wood-based panel product that meets the requirements of PS 1 or PS 2 and is bonded with a waterproof adhesive. Included under this designation is plywood, oriented strand board, and composite panels.

Subdiaphragm: A portion of a diaphragm used to transfer *wall* anchorage forces to the *diaphragm* cross ties.

Testing Agency: A company or corporation that provides testing and/or inspection services. The person in responsible charge of the *special inspector(s)* and the testing services shall be a *registered design professional*.

Tie-Down (Hold-Down): A device used to resist uplift of the chords of *shear walls*. These devices are intended to resist load without significant slip between the device and the *shear wall* chord or be shown with cyclic testing to not reduce the *wall* capacity and ductility.

Time Effect Factor: A factor applied to the adjusted resistence to account for effects of duration load.

Torsional Force Distribution: The distribution of horizontal *shear wall* through the rigid *diaphragm* when the center of the mass of the *structure* at the level under consideration does not coincide with the center of the rigidity (sometimes referred to as diaphragm rotation).

Toughness: The ability of a material to absorb energy without losing significant *strength.*

Utility or Service Interface: The connection of the *structure's* mechanical and electrical distribution systems to the utility or service company's distribution system.

Velocity-Dependent Damping Device: The force-displacement relation for a *velocity-dependent damping device* is primarily a function of the relative velocity between each end of the device and also may be a function of the relative displacement between each end of the device.

Veneers: Facings or ornamentations of brick, concrete, stone, tile, or similar materials attached to a backing.

Wall: A *component* that has a slope of 60 degrees or greater with the horizontal plane used to enclose or divide space.

> **Bearing Wall:** An exterior or interior *wall* providing support for vertical loads.
>
> **Cripple Wall:** A framed stud *wall*, less than 8 ft (2400 mm) in height, extending from the top of the foundation to the underside of the lowest floor framing. *Cripple walls* can occur in both engineered *structures* and conventional construction.
>
> **Light-Framed Wall:** A *wall* with wood or steel studs.
>
> **Light-Framed Wood Shear Wall:** A *wall* constructed with wood studs and sheathed with material rated for shear resistance.
>
> **Nonbearing Wall:** An exterior or interior *wall* that does not provide support for vertical loads other than its own weight or as permitted by the building code administered by the authority having jurisdiction.
>
> **Nonstructural Wall:** All walls other than *bearing walls* or *shear walls*.
>
> **Shear Wall (Vertical Diaphragm):** A *wall* designed to resist lateral forces parallel to the plane of the *wall* (sometimes referred to as a vertical *diaphragm).*

Wall System, Bearing: A structural system with *bearing walls* providing support for all or major portions of the vertical loads. *Shear walls* or *braced frames* provide seismic-force resistance.

Wind-Restraint System: The collection of structural elements that provides restraint of the seismic-isolated *structure* for wind loads. The *wind-restraint system* may be either an integral part of *isolator units* or a separate device.

2.2 NOTATIONS:

A, B, C, D, E, F	*Site classes* as defined in Sec. 4.1.2.
A_b	Area (in.^{2} or mm^2) of anchor bolt or stud in Chapters 6 and 11.
A_{ch}	Cross sectional-area (in.^{2} or mm^2) of a *component* measured to the outside of the special lateral reinforcement.
A_n	Net-cross sectional area of masonry (in.^{2} or mm^2) in Chapter 11.
A_o	The area of the load-carrying foundation (ft^2 or m^2).
A_p	Projected area on the masonry surface of a right circular cone for anchor bolt allowable shear and tension calculations (in.^{2} or mm^2) in Chapter 11.
A_s	The area of an assumed failure surface taken as a pyramid in Eq. 2.4.1-3 or in Chapter 9.
A_s	Cross-sectional area of reinforcement (in.^{2} or mm^2) in Chapters 6 and 11.

A_{sh}	Total cross-sectional area of hoop reinforcement (in.^{2} or mm^2), including supplementary cross-ties, having spacing of s_h and crossing a section with a core dimension of h_c.
A_{vd}	Required area of leg (in.^{2} or mm^2) of diagonal reinforcement.
A_x	The torsional amplification factor.
a_b	Length of compressive stress block (in. or mm) in Chapter 11.
a_d	The incremental factor related to *P-delta effects* in Sec. 5.4.5.
a_p	The *component* amplification factor as defined in Sec. 6.1.3.
B_a	Nominal axial strength of an anchor bolt (lb or N) in Chapter 11.
B_D	Numerical coefficient as set forth in Table 13.3.3.1 for effective damping equal to β_D.
B_{ID}	Numerical coefficient as set forth in Table A13.3.1 for effective damping equal to β_{ml} (m=1) and period of *structure* equal to T_{11}.
B_m	Numerical coefficient as set forth in Table 13.3.3.1 for effective damping equal β_M
B_{IM}	Numerical coefficient as set forth in Table A13.3.1 for effective damping equal to β_{mM} (m=1) and period of *structure* equal to T_{IM}.
B_{mD}	Numerical coefficient as set forth in Table A13.3.1 for effective damping equal to β_{ml} and period of *structure* equal to T_m.
B_{mM}	Numerical coefficient as set forth in Table A13.3.1 for effective damping equal to β_{mM} and period of *structure* equal to T_m.
B_R	Numerical coefficient as set forth in Table A13.3.1 for effective damping equal to β_R and the period of *structure* equal to T_R.
B_v	Nominal shear strength of an anchor bolt (lb or N) in Chapter 11.
$B_{V\text{-}1}$	Numerical coefficient as set forth in Table A13.3.1 for effective damping equal to the sum of viscous damping in the fundamental mode of vibration of the *structure* in the direction of interest, β_{Vm} (m = 1), plus inherent damping, β_l, and period of *structure* equal to T_1.
b	The shortest plan dimension of the *structure,* in ft (mm), measured perpendicular to d.
b_a	Factored axial force on an anchor bolt (lb or N) in Chapter 11.
b_v	Factored shear force on an anchor bolt (lb or N) in Chapter 11.
b_w	Web width (in.or mm) in Chapter 11.

C_u	Coefficient for upper limit on calculated period; see Table 5.4.2.
C_d	The deflection amplification factor as given in Table 5.2.2.
C_{mFD}	Force coefficient as set forth in Table A13.7.3.2.1.
C_{mFV}	Force coefficient as set forth in Table A13.7.3.2.2.
C_s	The *seismic response coefficient* (dimension-less) determined in Sec. 5.4.1.1.
C_{S1}	Seismic response coefficient (dimension-less) of the fundamental mode of vibration of the *structure* in the direction of interest. Sec. A13.4.3.4 or Sec. A13.5.3.4 (m = 1).
C_{sm}	The modal *seismic response coefficient* (dimension-less) determined in Sec. 5.5.4..
C_{Sm}	*Seismic response coefficient* (dimension-less) of the mth mode of vibration of the *structure* in the direction of interest, Sec. A13.5.3.4 (m = 1) or Sec. A13.5.3.6 (m > 1).
C_{SR}	*Seismic response coefficient* (dimension-less) of the residual mode of vibration of the *structure* in the direction of interest, Sec. A13.4.3.8.
C_{vx}	The vertical distribution factor as determined in Sec. 5.4.3.
c	Distance from the neutral axis of a flexural member to the fiber of maximum compressive strain (in. or mm).
c_{eq}	Effective energy dissipation device damping coefficient (Eq. 13.3.2.1).
D	Reference resistance in Chapter 12.
D	The effect of *dead load* in Sec. 5.2.7 and Chapter 13.
D	Adjusted resistance in Chapter 12.
D_D	*Design displacement* (in. or mm) at the center of rigidity of the *isolation system* in the direction under consideration as prescribed by Eq. 13.3.3.1.
D_D'	*Design displacement* (in. or mm), at the center of rigidity of the *isolation system* in the direction under consideration, as prescribed by Eq. 13.4.2-1.
D_{1D}	Fundamental mode *design displacement* at the center rigidity of the roof level of *structure* in the direction under consideration, Sec. A13.4.4.3 (in. or mm).
D_{1M}	Fundamental mode *maximum displacement* at the center of rigidity of the roof level of the *structure* in the direction under consideration, Sec. A13.4.4.6 (in. or mm).

D_{mD}	*Design displacement* at the center of rigidity of the roof level of the *structure* due to the mth mode of vibration in the direction under consideration, Sec. A13.5.4.3 (in. or mm).
D_{mM}	*Maximum displacement* at the center of rigidity of the roof level of the *structure* due to the mth mode of vibration in the direction under consideration, Sec. A13.5.4.6 (in. or mm).
D_M	Maximum *displacement* (in. or mm), at the center of rigidity of the *isolation system* in the direction under consideration as prescribed by Eq. 13.3.3.3.
D_M	*Maximum displacement* (in. or mm), at the center of rigidity of the *isolation system* in the direction under consideration as prescribed by Eq. 13.4.2-2.
D_p	Relative seismic *displacement* that the *component* must be designed to accommodate as defined in Sec. 6.1.4.
D_{RD}	Residual mode *design displacement* at the center of rigidity of the roof level of the *structure* in the direction under consideration, Sec. A13.4.4.3 (in. or mm).
D_{RM}	Residual mode *maximum displacement* at the center of rigidity of the roof level of the *structure* in the direction under consideration, Sec. A13.4.4.6 (in. or mm).
D_s	The total depth of the stratum in Eq. 5.8.2.1.2-4 (ft or m).
D_Y	Displacement at the center of rigidity of the roof level of the *structure* at the effective yield point of the *seismic-force-resisting system,* Sec. A13.3.4 (in. or mm).
D_{TD}	Total *design displacement* (in. or mm), of an element of the *isolation system* including both translational *displacement* at the center of rigidity and the *component* of torsional *displacement* in the direction under consideration as prescribed by Eq. 13.3.3.5-1.
D_{TM}	Total *maximum displacement* (in. or mm), of an element of the *isolation system* including both translational *displacement* at the center of rigidity and the component of torsional *displacement* in the direction under consideration as prescribed by Eq. 13.3.3.5-2.
d	Overall depth of member (in.or mm) in Chapters 5 and 11.
d	The longest plan dimension of the *structure* (ft.or mm) in Chapter 13.
d_b	Diameter of reinforcement (in.or mm) in Chapter 11.
d_e	Distance from the anchor axis to the free edge (in.or mm) in Chapter 9.
d_p	The longest plan dimension of the *structure* (ft or mm).

E	The effect of horizontal and vertical earthquake-induced forces (Sec. 5.2.7 and Chapter 13).
E_{loop}	Energy dissipated (kip-inches or kN-mm), in an *isolator unit* during a full cycle of reversible load over a test *displacement* range from Δ+ to Δ- as measured by the area enclosed by the loop of the loop of the force-deflation curve.
E_m	Chord modulus of elasticity of masonry (psi or MPa) in Chapter 11.
E_s	Modulus of elasticity of reinforcement (psi or MPa) in Chapter 11.
E_v	Modulus of rigidity of masonry (psi or Mpa) in Chapter 11.
e	The actual eccentricity (ft or mm), measured in plan between the center of mass of the *structure* above the isolation interface and the center of rigidity of the *isolation system,* plus accidental eccentricity (ft or mm), taken as 5 percent the maximum *building* dimension perpendicular to the direction of the force under consideration.
F_a	Acceleration-based site coefficient (at 0.3 sec period).
F-	Maximum negative force in an *isolator unit* during a single cycle of prototype testing a *displacement* amplitude of Δ-.
F-	Positive force in kips (kN) in an *isolator unit* during a single cycle of prototype testing at a *displacement* amplitude of Δ-.
F_i, F_n, F_x	The portion of the seismic base shear, V, induced at level i, n, or x, respectively, as determined in Sec. 5.3.4 (kip or kN).
F_{i1}	Inertial force at Level i (or mass point i) in the fundamental mode of vibration of the *structure* in the direction of interest, Sec. A13.4.3.9.
F_{im}	Inertial force at Level i (or mass point i) in the mth mode of vibration of the *structure* in the direction of interest, Sec. A13.5.3.7.
F_{iR}	Inertial force at Level i (or mass point i) in the residual mode of vibration of the *structure* in the direction of interest, Sec. A13.4.3.9.
F_p	The seismic design force center of gravity and distributed relative to the *component's* weight distribution as determined in Sec. 6.1.3.
F_p	The induced seismic force on connections of anchorages as determined in Sec. 5.2.6.1.2
F_u	Specified ultimate tensile strength (psi or MPa) of an anchor (Sec. 9.2.4).
F_v	Velocity-based site coefficient (at 1.0 sec period).
F_x	Total force distributed over the height of the *structure* above the isolation interface as prescribed by Eq. 13.3.5.

F_{xm}	The portion of the seismic *base shear,* V_m, induced at a Level x as determined in Sec. 5.5.5 (kip or kN).
f_c'	Specified compressive strength of concrete used in design
f_i	Lateral force at Level i of the *structure* distributed approximately in accordance with Equation 5.3.4-2, Sec. A13.4.3.3.
f_m'	Specified compressive strength of masonry (psi or MPa) at the age of 28 days unless a different age is specified, Chapter 11.
f_r	Modulus of rupture of masonry (psi or MPa) in Chapter 11.
f_s'	Ultimate tensile strength (psi or MPa) of the bolt, stud or insert leg wires. For A307 bolts or A108 studs, is permitted to be assumed to be 60,000 psi (415 Mpa).
f_y	Specified yield strength of reinforcement (psi or kPa).
f_{yh}	Specified yield stress of the special lateral reinforcement (psi or kPa).
G	yv_s^2/g = the average shear modulus for the soils beneath the foundation at large strain levels (psf of Pa).
G_o	yv_{so}^2/g = the average shear modulus for the soils beneath the foundation at small strain levels (psf of Pa).
g	Acceleration of gravity in in./sec^2 (mm/s^2).
H	Thickness of soil.
h	The height of a *shear wall* measured as the maximum clear height from the foundation to the bottom of the floor or roof framing above or the maximum clear height from the top of the floor or roof framing to the bottom of the floor or roof framing above.
$\overline{h}$	The effective height of the *building* as determined in Sec. 5.8.2.1.1 (ft or m).
h	Height of a wood shear panel or *diaphragm* (ft or mm) in Chapter 12.
h	The roof elevation of a *structure* in Chapter 6.
h	Height of the member between points of support (in. or mm) on Chapter 11.
h_c	The core dimension of a *component* measured to outside of the special lateral reinforcement (in. or mm).
h_i, h_n, h_x	The height above the *base* Level *I*, *n,* or *x*, respectively (ft or m).
h_r	Height of the *structure* above the *base* to the roof level (ft or m), Sec. A13.4.3.3.

h_{sx}	The *story* height below Level $x = h_x - h_{x-1}$ (ft. Or m).
I	The *occupancy importance factor* in Sec. 1.4.
I_{cr}	Moment of inertia of the cracked section (in.^{4} or mm) in Chapter 11.
I_n	Moment of inertia of the net cross-sectional area of a member (in.^{4} or mm^4) in Chapter 11.
I_o	The static moment of inertia of the load-carrying foundation , see Sec. 5.5.2.1 (in.^{4} or mm^4).
I_p	The *component* importance factor as prescribed in Sec. 6.1.5.
I	The *building* level referred to by the subscript I; $I = 1$ designates the first level above the *base*.
K_p	The stiffness of *component* or attachment as defined in Sec. 6.3.3.
K_y	The lateral stiffness of the foundation as defined in Sec. 5.8.2.1.1 (lb/in. or N/m).
K_θ	The rocking stiffness of the foundation as defined in Sec. 5.8.2.1.1 (ft.lb/degree or N m/rad).
KL/r	The lateral slenderness of a compression member measured in terms of its effective buckling length, KL, and the least radius of gyration of the member cross section, $\boldsymbol{r}$.
k	The distribution exponent given in Sec. 5.4.3.
K_{dmax}	Maximum effective stiffness, in kips/inch (kN/mm) of the *isolation system* at the *design displacement* in the horizontal direction under consideration as prescribed by Eq. 13.9.5.1-1.
K_{Dmin}	Minimum effective stiffness (kips/inch or kN/mm) of the *isolation system* at the *design displacement* in the horizontal direction under consideration as prescribed by Eq. 13.9.5.1-2.
K_{max}	Maximum effective stiffness (kips/inch or kN/mm) of the *isolation system* at the maximum *displacement* in the horizontal direction under consideration as prescribed by Eq 13.9.5.1-3.
K_{Min}	Minimum effective stiffness (kips/inch or kN/mm) of the *isolation system* at the maximum *displacement* in the horizontal direction under consideration, as prescribed by Eq. 13.9.5.1-4.
k_{eff}	Effective stiffness of an *isolator unit* as prescribed by Eq. 13.9.3-1.
$\bar{k}$	The stiffness of the *building* as determined in Sec. 5.8.2.1.1 (lb/ft or N/m).
L	The overall length of the *building* (ft or m) at the *base* in the direction being analyzed.

L	Length of bracing member (in. or mm) in Chapter 8.
L	Length of coupling beam between coupled *shear walls* in Chapter 11 (in. or mm).
L	The effect of *live load* in Chapter 13.
L_o	The overall length of the side of the foundation in the direction being analyzed, Sec. 5.8.2.1.2 (ft or m).
l	The dimension of a *diaphragm* perpendicular to the direction of application of force. For open-front *structures, l* is the length from the edge of the *diaphragm* at the open front to the vertical resisting elements parallel to the direction of the applied force. For a cantilevered *diaphragm, l* is the length from the edge of the *diaphragm* at the open front to the vertical resisting elements parallel to the direction of the applied force.
ℓ_b	Effective embedment length of anchor bolt (in. or mm) in Chapter 11.
ℓ_{bc}	Anchor bolt edge distance (in. or mm) in Chapter 11.
ℓ_d	Development length (in. or mm) in Chapter 11.
ℓ_{dh}	Equivalent development length for a standard hook (in. or mm) in Chapter 11.
ℓ_{1d}	Minimum lap splice length (in. or mm) in Chapter 11.
M	Moment on a masonry section due to un-factored loads (in. lb or N · mm) in Chapter 11.
M_a	Maximum moment in a member at deflation is computed (in. ·lb or N · mm) in Chapter 11.
M_{cr}	Cracking moment strength of the masonry (in. ·lb or N ·mm) in Chapter 11.
M_d	Design moment strength (in. ·lb or N ·mm) in Chapter 11.
M_f	The foundation overturning design moment as defined in Sec. 5.4.5 (ft ·kip or kN ·m).
$M_{o,}$ M_{o1}	The overturning moment at the foundation-soil interface as determined in Sec. 5.5.6 and 5.8.3 (ft ·lb or N ·m)
M_{nb}	Un-factored ultimate moment capacity at balanced strain conditions.
M_t	The torsional moment resulting from the location of the *building* masses (ft ·kip or kN ·m).
M_{ta}	The accidental torsional moment as determined in Sec. 5.4.4.2 (ft ·kip or kN ·m).

M_u	Required flexural strength due to factored loads (in.·lb or N ·mm) in Chapter 11.
M_1, M_2	Nominal moment strength at the ends of the coupling beam (in ·lb or N ·mm) in Chapter 11.
M_x	The *building* overturning design moment at Level *x* as defined in Sec. 5.3.6 or Sec. 5.4.10 (ft ·kip or kN ·m).
m	A subscript denoting the mode of vibration under consideration; i.e., m=1 for the fundamental mode.
N	Number of *stories*, Sec. 5.4.2.1.
N	Standard penetration resistance, ASTM D1536-84.
$\overline{N}$	Average field standard penetration test for the top 100 ft (30 m); see Sec. 4.1.
N_{ch}	Average standard penetration of cohesion-less soil layers for the top 100 ft (30 m); see Sec. 4.1.
N_v	Force acting normal to shear surface (lb or N) in Chapter 11.
n	Designates the level that is uppermost in the main portion of the *building*.
n	Number of anchors in Chapter 9.
P	Axial load on a masonry section due to unfactored loads (lb or N) in Chapter 11.
P_c	Design tensile strength governed by concrete failure of anchor bolts in Chapter 9.
P_D	Required axial strength on a column resulting from the application of *dead load*, *D,* in Chapter 5 (kip or kN).
P_E	Required axial strength on a column resulting from the application of the amplified earthquake load, E', in Chapter 5 (kip or kN).
P_L	Required axial strength on a column resulting from application of *live load*, *L,* in Chapter 5(kip or kN).
P_n	Nominal axial load strength (lb or N) in Chapter 8.
P_n	The algebraic sum of the *shear wall* and the minimum gravity loads on the joint surface acting simultaneously with the shear (lb or N).
P_n	Nominal axial load strength (lb or N) in Chapter 11.
P_s	Design tensile strength governed by steel of anchor bolts in Chapter 9.
P_u	Required axial load (lb or N) in Chapter 11.
P_u	Tensile strength required due to factored loads (lb or N) in Chapter 9.

$P_u^\star$	Required axial strength on a brace (kip or kN) in Chapter 8.
P_x	The total unfactored vertical design load at and above level x (kip or kN).
PI	Plasticity index, ASTM D4318-93.
Q_{DSD}	Force in an element of the *damping system* required to resist design seismic forces of *displacement-dependent damping devices*, Sec. A13.7.3.2.
Q_E	The effect of horizontal seismic forces (kip or kN) in Chapters 5 and 13.
Q_{mDSV}	Forces in an element of the *damping system* required to resist design seismic forces of *velocity-dependent damping devices* due to the mth mode of vibration of *structure* in the direction of interest, Sec. A13.7.3.2.
Q_{mSFRS}	Force in a element of the *damping system* equal to the design seismic force of the mth mode of vibration of the *seismic force resisting system* in the direction of interest, A13.7.3.2.
Q_v	The load equivalent to the effect of the horizontal and vertical shear strength of the vertical segment in the Appendix to Chapter 8.
q_H	Hysteresis loop adjustment factor as determined in Sec. A13.3.3.
R	The response modification coefficient as given in Table 5.2.2.
R_1	Numerical coefficient related to the type of lateral-force-resisting system above the *isolation system* as set forth in Table 13.3.4.2 for seismically isolated *structures*.
R_p	The *component* response modification system factor as defined in Chapter 6.
r	The characteristic length of the foundation as defined in Chapter 5 (ft or m)
r	Radius of gyration (in. or mm) in Chapter 11.
r_a, r_m	The characteristic foundation length defined in Sec. 5.8.2.1.1 (ft or m).
r_x	The ratio of the design *story shear* resisted by the most heavily loaded single element in the story, in direction x, to the total *story shear.*
S	Section modules based on net cross sectional area of a *wall* (in.^{3} or mm^3) in Chapter 11.
S_1	The *maximum considered earthquake*, 5 percent damped, spectral response acceleration at a period of 1 second as defined in Chapter 4.
S_{D1}	The design, 5 percent damped, spectral response acceleration at a period of 1 second as defined in Chapter 4..

S_{DS}	The design, 5 percent damped, spectral response acceleration at short periods as defined in Chapter 4.
S_{M1}	The *maximum considered earthquake,* 5 percent damped, spectral response acceleration at a period of one second adjusted for *site class* effects as defined in Chapter 4.
S_{MS}	The *maximum considered earthquake*, 5 percent damped, spectral response acceleration at short periods adjusted for *site class* effects as defined in Chapter 4.
S_s	The mapped *maximum considered earthquake,* 5 percent damped, spectral response acceleration at short periods as defined in Chapter 4.
S_{pr}	Probable strength of precast element connectors (Sec. 9.1.1.12).
$\bar{s}_u$	Average undrained shear strength in top 100 ft (30.5 m); see Sec. 4.1.2.3, ASTM D2166-91 or ASTM D2850-87.
s_h	Spacing of special lateral reinforcement (in. or mm). .
T	The period (sec) of the fundamental mode of vibration of the structure in the direction of interest as determined in Chapter 5.
T, T_1	The effective fundamental period (sec) of the *building* as determined in Chapter 5.
T_1	Period, in seconds, of the fundamental mode of vibration of the *structure* in the direction of interest, Sec. A13.4.3.3.
T_a	The approximate fundamental period (sec) of the *building* as determined in Chapter 5.
T_D	Effective period, in seconds (sec), of the seismically isolated *structure* at the design *displacement* in the direction under consideration as prescribed by Eq. 13.3.3.2.
T_{1D}	Effective period, in seconds, of the fundamental mode of vibration of the *structure* at the *design displacement* in the direction under consideration, as prescribed by Sec. A13.4.3.5 or Sec. A13.5.3.5.
T_{1M}	Effective period, in seconds, of the fundamental mode of vibration of the *structure* at the *maximum displacement* in the direction under consideration, as prescribed by Sec. A13.4.3.5 or Sec. A13.5.3.5.
T_M	Effective period, in seconds (sec), of the seismically isolated *structure* at the maximum *displacement* in the direction under consideration as prescribed by Eq. 13.3.3.4.
T_m	The period (sec) of the mth mode of vibration of the *structure in the direction of interest* determined in Chapter 5.

T_m	Period, in seconds, of the mth mode of vibration of the *structure* in the direction under consideration, Sec. A13.5.3.6.
T_0	$0.2S_{D1}/S_{DS}$
T_p	The fundamental period (sec) of the *component* and its attachment(s) as defined in Sec. 6.3.3.
T_R	Period, in seconds, of the residual mode of vibration of the *structure* in the direction under consideration, Sec. A13.4.3.7.
T_S	S_{D1}/S_{DS}.
T_4	Net tension in steel cable due to *dead load,* prestress, *live load*, and seismic load.
t	Specified *wall* thickness dimension or least lateral dimension of a column (in. or mm) in Chapter 11.
t_c	Thickness of masonry cover over reinforcing bars measured from the surface of the masonry to the surface of the reinforcing bars (in. or mm) in Chapter 11.
V	The total design shear at the base of the *structure* in the direction of interest, as determined using the procedure of Sec. 5.3, including Sec. 5.4.1 (kip or kN).
V	Shear on a masonry section due to un-factored loads (lb or N) in Chapter 11.
V_b	The total lateral seismic design force or shear on elements of the *isolation system* or elements below the *isolation system* as prescribed by Eq. 13.3.4.1.
V_m	Shear strength provided by masonry (lb or N) in Chapter 11.
V_m	Design value of the seismic *base shear* of the mth mode of vibration of the *structure* in the direction of interest, Sec. 5.4.5 or Sec. A13.5.3.2 (kip or kN).
V_{mm}	Minimum allowable value of *base shear* permitted for design of the *seismic-force-resisting system* of the *structure* in the direction of interest, Sec. A13.2.4.1 (kip or kN).
V_n	Nominal shear strength (lb or N) in Chapter 11.
V_R	Design value of the seismic *base shear* of the residual mode of vibration of the *structure* in a given direction, as determined in Sec. A13.4.3.6 (kip or kN).
V_s	The total lateral seismic design factor or shear on elements above the *isolation system* as prescribed by Eq. 13.3.4.2.

V_s	Shear strength provided by shear reinforcement (lb or N) in Chapters 6 and 11.
V_t	The design value of the seismic *base shear* as determined in Chapter 5 (kip or N).
V_u	Required shear strength (lb or N) due to factored loads in Chapters 6 and 11.
V_x	The seismic design shear in *Story x* as determined in Chapter 5 (kip or kN).
V_1	The portion of seismic *base shear, V,* contributed by the fundamental mode as determined in Chapter 5 (kip or kN).
V_l	The design value of the seismic base shear of the fundamental mode in a given direction as determined in Chapter 5 (kip or kN).
ΔV	The reduction in V as determined in Chapter 5 (kip or kN).
ΔV_1	The reduction of V_1 as determined in Chapter 5 (kp or kN).
v_s	The average shear wave velocity for the soils beneath the foundation at large strain levels as determined in chapter 5 (ft/s or m/s).
$\bar{v}_s$	Average shear wave velocity in top one 100 ft (30 m); see Chapter 4.
v_{so}	The average shear wave velocity for the soils beneath the foundation at small strain levels as determined in chapter 5 (ft/s or m/s).
W	The total gravity load of the *structure* defined in Chapter 5 (kip or kN). For calculation of a seismically isolated building *structure,* the period, W, is the total seismic dead load weight of the *structure* above the isolation system (kip or kN).
$\overline{W}$	The effective *gravity load* of the structure as defined in Chapter 5 and 5.5.3 (kip or kN).
$\overline{W}_1$	Effective fundamental mode *gravity load* of *structure* including portions of the live load determined in accordance with Eq. 5.4.5-2 for m = 1 (kip or kN).
$\overline{W}_R$	Effective residual mode *gravity load* of the *structure* determined in accordance with Eq. A13.4.3.7-3 (kip or kN).
W_D	The energy dissipated per cycle at the *story displacement* for the *design earthquake.*

$\overline{W}_m$	The effective gravity load of mth mode of vibration of the *structure* determined in Chapter 5 (kip or kN).
W_p	*Component* operating weight (lb or N).
w	Width of wood *shear panel* or *diaphragm* in Chapter 9 (ft or mm).
w	Moisture content (in percent), ASTM D2216-92.
w	The dimension of a diaphragm or *shear wall* in the direction of application of force.
w_i, w_x	The portion of the total *gravity load*, W, located or assigned to Level I or x (kip or kN).
z	The level under consideration; $x = 1$ designates the first level above the *base.*
x	Elevation in *structure* of a *component* addressed by Chapter 6.
y	Elevation difference between points of attachment in Chapter 6.
y	The distance, in ft (mm), between the center of rigidity of the *isolation system* rigidity and the element of interest measured perpendicular to the direction of seismic loading under consideration.
α	The relative weight density of the *structure* and the soil as determined in Chapter 5.
α	Angle between diagonal reinforcement and longitudinal axis of the member (degree or rad).
α	Velocity power term relating *damping device* force to *damping* device velocity.
β	Ratio of shear demand to shear capacity for the *story* between Level x and x-1.
β	The fraction of critical damping for the coupled *structure*-foundation system determined in Chapter 5.
β_D	Effective damping of the *isolation system* at the *design displacement* as prescribed by Eq. 13.9.5.2-1.
β_{eff}	Effective damping of the *isolation system* as prescribed by Eq. 13.9.3-2.
β_{HD}	Component of effective damping of the *structure* in the direction of interest due to post-yield hysteric behavior of the *seismic-force-resisting system* and elements of the *damping system* at effective ductility demand μ_D, Sec. A13.3.2.2.
β_{HM}	Component of effective damping of the *structure* in the direction of interest due to post-yield hysteric behavior of the *seismic-force-resisting*

system and elements of the *damping system* at effective ductility demand, μ_M, Sec. A13.3.2.2.

β_I Component of effective damping of the *structure* due to the inherent dissipation of energy by elements of the *structure*, at or just below the effective yield displacement of the *seismic-force-resisting system*, Sec. A13.3.2.1.

β_M Effective damping of the *isolation system* at the maximum *displacement* as prescribed by Eq. 13.9.5.2-2.

β_{mD} Total effective damping of the mth mode of vibration of the *structure* in the direction of interest at the *design displacement*, Sec. A13.3.2.

β_{mM} Total effective damping of the mth mode of vibration of the *structure* in the direction of interest at the *maximum displacement* , Sec. A13.3.2.

β_o The foundation damping factor as specified in Chapter 5.

β_R Total effective damping in the residual mode of vibration of the *structure* in the direction of interest, calculated in accordance with Sec. A13.3.2 (μ_D =1.0 and μ_M = 1.0).

β_{Vm} Component of effective damping of the mth mode of vibration of the *structure* in the direction of interest due to viscous dissipation of energy by the *damping system*, at or just below the effective yield displacement of the *seismic-force-resisting system*, Sec. A13.3.2.3.

γ Lightweight concrete factor

γ The average unit weight of soil (lb/ft^3 or kg/m^3).

Δ The design *story* drift as determined in Chapter 5 (in. or mm).

Δ The *displacement* of the dissipation device and device supports across the story.

Δ Suspended ceiling lateral deflection (calculated) in Chapter 6 (in. or mm).

Δ_a The allowable *story* drift as specified in Chapter 5 (in. or mm).

Δ_D Total *design earthquake* story drift of the *structure* in the direction of interest, Sec. A13.4.4.4 (in. or mm).

Δ_{ID} *Design earthquake* story drift due to the fundamental mode of vibration of the *structure* in the direction of interest, Sec. A13.4.4.4 (in. or mm).

Δ_M Total *maximum earthquake* story drift of the *structure* in the direction of interest, Sec. A13.4.4.6 (in. or mm).

Δ_m The design modal *story* drift determined in Chapter 5 (in. or mm).

Δ_{mD} *Design earthquake* story drift due to the mth mode of vibration of the *structure* in the direction of interest, Sec. A13.4.4.4 (in. or mm).

Δ_p	Relative *displacement* that the *component* must be designed to accommodate as defined in Chapter 6.
Δ_{RD}	*Design earthquake* story drift due to the residual mode of vibration of the *structure* in the direction of interest, Sec. A13.4.4.4 (in. or mm).
Δ^-	Maximum positive *displacement* of an *isolator unit* during each cycle of prototype testing.
Δ^-	Maximum negative *displacement* of an *isolator unit* during each cycle of prototype testing.
δ_{avg}	The average of the *displacements* at the extreme points of the *structure* at Level *x* (in. or mm).
δ_{cr}	Deflation based on cracked section properties (in. or mm) in Chapter 11.
δ_i	Elastic deflection of Level *i* of the *structure* due to applied lateral force, f_i, Sec. A13.4.3.3 (in. or mm).
δ_{iID}	Fundamental mode *design earthquake* deflection of Level *i* at the center of rigidity of the *structure* in the direction under consideration, Sec. A13.4.4.2 (in. or mm).
δ_{iD}	Total *design earthquake* deflection of Level *i* at the center of rigidity of the *structure* in the direction under consideration, Sec. A13.4.4.2 (in. or mm).
δ_{iM}	Total *maximum earthquake* deflection of Level *i* at the center of rigidity of the *structure* in the direction under consideration, Sec. A13.4.4.2 (in. or mm).
δ_{iRD}	Residual mode *design earthquake* deflection of Level *i* at the center of rigidity of the *structure* in the direction under consideration, Sec. A13.4.4.2 (in. or mm).
δ_{im}	Deflection of Level *i* in the mth mode of vibration at the center of rigidity of the *structure* in the direction under consideration, Sec. A13.5 (in. or mm).
δ_{max}	The maximum *displacement* at Level *x* (in. or mm).
δ_x	The deflection of Level *x* at the center of the mass at and above Level *x* as determined in Chapter 5 (in. or mm).
δ_{xe}	The deflection of Level *x* at the center of the mass at and above Level *x* determined by an elastic analysis as specified in Chapter 5 (in. or mm).
δ_{xem}	The modal deflection of Level *x* at the center of the mass at and above Level *x* determined by an elastic analysis as specified in Chapter 5 (in. or mm).

δ_{xmv} δ_{xm}	The modal deflection of Level x at the center of the mass at and above Level x as determined in Chapter 5 (in. or mm).
δ_x, δ_{xl}	The deflection of Level x at the center of the mass at and above Level x as determined in Chapter 5 (in. or mm).
ϵ_{mu}	Maximum useable compressive strain of masonry (in./in. or mm/mm) in Chapter 11.
μ	Effective ductility demand on the *seismic-force-resisting system* in the direction of interest.
μ_D	Effective ductility demand on the *seismic-force-resisting system* in the direction of interest due to the *design earthquake*, Sec. A13.4.
μ_M	Effective ductility demand on the *seismic-force-resisting system* in the direction of interest due to the *maximum considered earthquake*, Sec. A13.4.
μ_{max}	Maximum allowable effective ductility demand on the *seismic-force-resisting system* due to *design earthquake*, Sec. A13.3.5.
θ	The stability coefficient for *P-delta effects* as determined in Chapter 5.
τ	The overturning moment reduction factor.
ρ	A reliability coefficient based on the extent of structural redundancy present in a *building* as defined in Chapter 5.
ρ	Ratio of the area of reinforcement to the net cross-sectional area of masonry in a plane perpendicular to the reinforcement in Chapter 11.
ρ_b	Reinforcement ratio producing balanced strain conditions in Chapter 11.
ρ_h	Ratio of the area of shear reinforcement to the cross sectional area of masonry in a plane perpendicular to the reinforcement in Chapter 11.
ρ_s	Spiral reinforcement ratio for precast prestressed piles in Chapter 7.
ρ_v	Ratio of vertical or horizontal reinforcement in *walls*.
ρ_x	A reliability coefficient based on the extent of structural redundancy present in the *seismic-force-resisting system* of a *building* in the x direction.
λ	Time effect factor.
ϕ	The capacity reduction factor.
ϕ	Strength reduction factor in Chapters 6 and 11.
ϕ	Resistance factor for steel in Chapter 8 and wood in Chapter 12.

ϕ_{i1}	Displacement amplitude at Level *i* of the fundamental mode of vibration of the *structure* in the direction of interest, normalized to unity at the roof level, Sec. A13.4.3.3.
ϕ_{im}	The displacement amplitude at the ith level of the *structure* for the fixed base condition in the mth mode of vibration in the direction of interest normalized to unity at the roof level as determined in Chapter 5.
ϕ_{iR}	Displacement amplitude at Level *i* of the residual mode of vibration of the *structure* in the direction of interest normalized to unity at the roof level, Sec. A13.4.3.7.
Γ_1	Participation factor of fundamental mode of vibration of the *structure* in the direction of interest, Sec. A13.4.3.3 or Sec. A13.5.3.3 (m = 1).
Γ_m	Participation factor on the mth mode of vibration of the *structure* in the direction of interest, Sec. A13.5.3.3.
Γ_R	Participation factor of the residual mode of vibration of the *structure* in the direction of interest, Sec. A13.4.3.7.
∇_{1D}	*Design earthquake* story velocity due to the fundamental mode of vibration of the *structure* in the direction of interest, Sec. A13.4.4.5 (in/sec or mm/sec).
∇_D	Total *design earthquake* story velocity of the *structure* in the direction of interest, Sec. A13.4.4.5 (in/sec or mm/sec).
∇_M	Total *maximum earthquake* story velocity of the *structure* in the direction of interest, Sec. A13.4.4.6 (in/sec or mm/sec).
∇_{mD}	*Design earthquake* story velocity due to the mth mode of vibration of the *structure* in the direction of interest, Sec. A13.4.4.5 (in/sec or mm/sec).
Ω_0	Overstrength factor as defined in Table 5.2.2.
Ω	Factor of safety in Chapter 8.
$\sum E_D$	Total energy dissipated, in kip-inches (kN-mm), in the *isolation system* during a full cycle of response at the design *displacement*, D_D.
$\sum E_M$	Total energy dissipated, in kip-inches (kN-mm), on the *isolation system* during a full cycle of response at the maximum *displacement* , D_M.
$\sum \lvert F_D^+ \rvert_{max}$	Sum, for all *isolator units*, of the maximum absolute value of force, in kips (kN), at a positive *displacement* equal to D_D.
$\sum \lvert F_D^+ \rvert_{min}$	Sum, for all *isolator units,* of the minimum absolute value of force, in kips (kN), at a positive *displacement* equal to D_D.
$\sum \lvert F_D^- \rvert_{max}$	Sum, for all *isolator units*, of the maximum absolute value of force, in kips (kN), at a negative *displacement* equal to D_D.

$\sum \lvert F_D^- \rvert_{min}$	Sum, for all *isolator units*, of the minimum absolute value force , in kips (kN), at a negative *displacement* equal to D_D.
$\sum \lvert F_M^- \rvert_{max}$	Sum, for all *isolator units,* of the maximum absolute value of force, in kips (kN), at a positive *displacement* equal to D_M.
$\sum \lvert F_M^- \rvert_{min}$	Sum, for all *isolator units*, of the minimum absolute value of force, in kips (kN), at a positive *displacement* equal to D_M.
$\sum \lvert F_M^- \rvert_{max}$	Sum, for all *isolator units*, of the minimum absolute value of force, in kips (kN), at a negative *displacement* equal to D_M.
$\sum \lvert F_M^- \rvert_{min}$	Sum, for all *isolator units*, of the minimum absolute value of force, in kips (kN), at a negative *displacement* equal to D_M.

Chapter 3

QUALITY ASSURANCE

3.1 SCOPE: This chapter provides minimum requirements for quality assurance for *seismic-force-resisting systems* and *designated seismic systems*. These requirements supplement the testing and inspection requirements contained in the reference standards given in Chapters 8 through 14.

3.2 QUALITY ASSURANCE: A *quality assurance plan* shall be submitted to the authority having jurisdiction. A *quality assurance plan*, *special inspection(s)*, and testing as set forth in this chapter shall be provided for the following:

1. The *seismic-force-resisting systems* in *structures* assigned to *Seismic Design Categories* C, D, E, and F.

2. *Designated seismic systems* in *structures* assigned to *Seismic Design Categories* D, E, and F that are required in Table 6.1.7.

   Exception: *Structures* that comply with the following criteria are exempt from the preparation of a *quality assurance plan* but those *structures* are not exempt from *special inspection(s)* or testing requirements:

   1. The *structure* is constructed of light wood framing or light gauge cold-formed steel framing, S_{DS} does not exceed 0.50, the height of the *structure* does not exceed 35 ft above grade, and the *structure* meets the requirements in Items 3 and 4 below

   or

   2. The *structure* is constructed using a reinforced masonry structural system or *reinforced concrete* structural system, S_{DS} does not exceed 0.50, the height of the *structure* does not exceed 25 ft above grade, and the *structure* meets the requirements in Items 3 and 4 below.

   3. The *structure* is classified as *Seismic Use Group* I.

   4. The *structure* does not have any of the following plan irregularities as defined in Table 5.2.3.2 or any of the following vertical irregularities as defined in Table 5.2.3.3:

      a. Torsional irregularity,
      b. Extreme torsional irregularity,
      c. Nonparallel systems,
      d. Stiffness irregularity -- soft *story*,
      e. Stiffness irregularity -- extreme soft *story*,
      f. Discontinuity in capacity -- weak *story*.

3.2.1 Details of Quality Assurance Plan: The *registered design professional* in responsible charge of the design of a *seismic-force-resisting system* and a *designated seismic system* shall be responsible for the portion of the *quality assurance plan* applicable to that system. The *quality assurance plan* shall include:

1. The *seismic-force-resisting systems* and *designated seismic system*s in accordance with this chapter that are subject to quality assurance,
2. The *special inspections* and testing to be provided as required by the *Provisions* and the reference standards in Chapters 4 through 14,
3. The type and frequency of testing,
4. The type and frequency of *special inspections*,
5. The frequency and distribution of testing and *special inspection* reports,
6. The *structural observations* to be performed, and
7. The frequency and distribution of *structural observation* reports.

3.2.2 Contractor Responsibility: Each contractor responsible for the construction of a *seismic-force-resisting system*, *designated seismic system*, or *component* listed in the *quality assurance plan* shall submit a written contractor's statement of responsibility to the authority having jurisdiction and to the *owner* prior to the commencement of work on the system or *component*. The contractor's statement of responsibility shall contain the following:

1. Acknowledgment of awareness of the special requirements contained in the *quality assurance plan*;
2. Acknowledgment that control will be exercised to obtain conformance with the *construction documents* approved by the authority having jurisdiction;
3. Procedures for exercising control within the contractor's organization, the method and frequency of reporting, and the distribution of the reports; and
4. Identification and qualifications of the person(s) exercising such control and their position(s) in the organization.

3.3 SPECIAL INSPECTION: The *owner* shall employ a *special inspector(s)* to observe the construction for compliance with the requirements presented below.

3.3.1 Piers, Piles, Caissons: *Continuous special inspection* during driving of piles and placement of concrete in piers, piles, and caissons. *Periodic special inspection* during construction of drilled piles, piers, and caissons including the placement of reinforcing steel.

3.3.2 Reinforcing Steel:

3.3.2.1: *Periodic special inspection* during and upon completion of the placement of reinforcing steel in *intermediate moment frames*, in *special moment frames*, and in *shear walls*.

3.3.2.2: *Continuous special inspection* during the welding of reinforcing steel resisting flexural and axial forces in *intermediate moment frames* and *special moment frames*, in *boundary members* of concrete *shear walls*, and during welding of shear reinforcement.

3.3.3 Structural Concrete: *Periodic special inspection* during and upon completion of the placement of concrete in *intermediate moment frames*, in *special moment frames*, and in *boundary members* of *shear walls*.

3.3.4 Prestressed Concrete: *Periodic special inspection* during the placement and after completion of placement of prestressing steel and *continuous special inspection* is required during all stressing and grouting operations and during the placement of concrete.

3.3.5 Structural Masonry:

3.3.5.1: *Periodic special inspection* during the preparation of mortar, the laying of masonry units, and the placement of reinforcement and prior to the placement of grout

3.3.5.2: *Continuous special inspection* during the welding of reinforcement, grouting, consolidation, reconsolidation, and placement of bent-bar anchors as required by Sec. 11.3.12.2.

3.3.6 Structural Steel:

3.3.6.1: *Continuous special inspection* for all structural welding.

> **Exception:** *Periodic special inspection* is permitted for single-pass fillet or resistance welds and welds loaded to less than 50 percent of their *design strength* provided the qualifications of the welder and the welding electrodes are inspected at the beginning of the work and all welds are inspected for compliance with the approved *construction documents* at the completion of welding.

3.3.6.2: *Periodic special inspection* in accordance with AISC LRFD or AISC ASD for installation and tightening of fully tensioned high-strength bolts in slip-critical *connections* and in *connections* subject to direct tension. Bolts in *connections* identified as not being slip-critical or subject to direct tension need not be inspected for bolt tension other than to ensure that the plies of the connected elements have been brought into snug contact.

3.3.7 Structural Wood:

3.3.7.1: *Continuous special inspection* during all field gluing operations of elements of the *seismic-force-resisting system*.

3.3.7.2: *Periodic special inspection* for nailing, bolting, anchoring, and other fastening of *component*s within the *seismic-force-resisting system* including *drag struts*, braces, and *tie-downs*.

3.3.7.3: *Periodic Special Inspections* for wood *shear walls*, *shear panels*, and *diaphragms*, that are included in the *seismic force resisting system* when the *Provisions* require the spacing of nails, screws, or fasteners for wood sheathing to be 4 inches or less on center.

3.3.8 Cold–Formed Steel Framing:

3.3.8.1: *Periodic special inspection* during all welding operations of elements of the *seismic-force-resisting system*.

3.3.8.2: *Periodic special inspection* for screw attachment, bolting, anchoring, and other fastening of *components* within the *seismic-force-resisting system*, including struts, braces, and hold-downs.

3.3.9 Architectural Components: *Special inspection* for architectural *components* shall be as follows:

1. *Periodic special inspection* during the erection and fastening of exterior cladding, interior and exterior nonbearing *walls*, and interior and exterior *veneer* in *Seismic Design Categories* D, E, and F.

Exceptions:

a. Architectural components less than 30 ft (9 m) above grade or walking surface,

b. Cladding and *veneer* weighing 5 lb/ft^2 (24.5 N/m^2) or less, and

c. Interior nonbearing walls weighing 15 lb/ft^2 (73.5 N/m^2) or less.

2. *Periodic special inspection* during erection of glass 30 ft (9m) or more above an adjacent grade or walking surface in *glazed curtain walls, glazed storefronts*, and interior glazed *partitions* in *Seismic Design Categories* D, E, and F.

3. *Periodic special inspection* during the anchorage of access floors, suspended ceilings, and *storage racks* 8 ft (2.4 m) or greater in height in *Seismic Design Categories* D, E, and F.

3.3.10 Mechanical and Electrical Components: *Special inspection* for mechanical and electrical *components* shall be as follows:

1. *Periodic special inspection* during the anchorage of electrical equipment for emergency or standby power systems in *Seismic Design Categories* C, D, E, and F;
2. *Periodic special inspection* during the installation of anchorage of all other electrical equipment in *Seismic Design Categories* E and F;
3. *Periodic special inspection* during installation of flammable, combustible, or highly toxic piping systems and their associated mechanical units in *Seismic Design Categories* C, D, E, and F;
4. *Periodic special inspection* during the installation of HVAC ductwork that will contain hazardous materials in *Seismic Design Categories* C, D, E, and F; and
5. *Periodic special inspection* during the installation of vibration isolation systems when the *construction documents* indicate a maximum clearance (air gap) between the equipment support frame and restraint of less than or equal to 1/4 inch.

3.3.11 Seismic Isolation System: *Periodic special inspection* during the fabrication and installation of *isolator units* and energy dissipation devices if used as part of the seismic *isolation system*.

3.4 TESTING: The *special inspector(s)* shall be responsible for verifying that the testing requirements are performed by an approved *testing agency* for compliance with the requirements below.

3.4.1 Reinforcing and Prestressing Steel: Special testing of reinforcing and prestressing steel shall be as indicated in the requirements below.

3.4.1.1: Examine certified mill test reports for each shipment of reinforcing steel used to resist flexural and axial forces in *reinforced concrete intermediate frames, special moment frames,* and *boundary members* of reinforced concrete *shear walls* or reinforced masonry *shear walls* and determine conformance with the *construction documents*.

3.4.1.2: Where ASTM A615 reinforcing steel is used to resist earthquake-induced flexural and axial forces in *special moment frames* and in wall *boundary* elements of *shear walls* in *structures* of *Seismic Design Categories* D, E, and F, verify that the requirements of Sec. 21.2.5.1 of ACI 318 have been satisfied.

3.4.1.3: Where ASTM A615 reinforcing steel is to be welded, verify that chemical tests have been performed to determine weldability in accordance with Sec. 3.5.2 of ACI 318.

3.4.2 Structural Concrete: Samples of structural concrete shall be obtained at the project site and tested in accordance with requirements of ACI 318.

3.4.3 Structural Masonry: Quality assurance testing of structural masonry shall be in accordance with the requirements of ACI 350.

3.4.4 Structural Steel: The testing needed to establish that the construction is in conformance with these *Provisions* shall be included in a *quality assurance plan*. The minimum testing contained in the *quality assurance plan* shall be as required in AISC Seismic and the following requirements:

3.4.4.1 Base Metal Testing: Base metal thicker than 1.5 in. (38 mm), when subject to through-thickness weld shrinkage strains, shall be ultrasonically tested for discontinuities behind and adjacent to such welds after joint completion. Any material discontinuities shall be accepted or rejected on the basis of ASTM A435, *Specification for Straight Beam Ultrasound Examination of Steel Plates*, or ASTM A898, *Specification for Straight Beam Ultrasound Examination for Rolled Steel Shapes*, (Level 1 Criteria), and criteria as established by the *registered design professional(s)* in responsible charge and the *construction documents*.

3.4.5 Mechanical and Electrical Equipment: As required to ensure compliance with the seismic design requirements herein, the *registered design professional* in responsible charge shall clearly state the applicable requirements on the *construction documents*. Each manufacturer of *designated seismic system components* shall test or analyze the *component* and its mounting system or anchorage as required and shall submit evidence of compliance for review and acceptance by the *registered design professional* in responsible charge of the *designated seismic system* and for approval by the authority having jurisdiction. The evidence of compliance shall be by actual test on a shake table, by three-dimensional shock tests, by an analytical method using dynamic characteristics and forces, by the use of experience data (i.e., historical data demonstrating acceptable seismic performance), or by more rigorous analysis providing for

equivalent safety. The *special inspector* shall examine the *designated seismic system* and shall determine whether the anchorages and label conform with the evidence of compliance.

3.4.6 Seismically Isolated Structures: For required system tests, see Sec. 13.9.

3.5 STRUCTURAL OBSERVATIONS: *Structural observations* shall be provided for those *structures* included in *Seismic Design Categories* D, E, and F when one or more of the following conditions exist:

1. The *structure* is included in *Seismic Use Group* II or *Seismic Use Group* III or
2. The height of the *structure* is greater than 75 ft above the *base* or
3. The *structure* is in *Seismic Design Category* E or F and *Seismic Use Group* I and is greater than two *stories* in height.

Observed deficiencies shall be reported in writing to the *owner* and the authority having jurisdiction.

3.6 REPORTING AND COMPLIANCE PROCEDURES: Each *special inspector* shall furnish copies of inspection reports, noting any work not in compliance with the approved *construction documents* and corrections made to previously reported work to the authority having jurisdiction, *registered design professional* in responsible charge, the *owner*, the *registered design professional* preparing the *quality assurance plan*, and the contractor. All deficiencies shall be brought to the immediate attention of the contractor for correction.

At completion of construction, each *special inspector* shall submit a report certifying that all inspected work was completed substantially in compliance with the approved *construction documents*. Work not in compliance with the approved *construction documents* shall be described in the report.

At completion of construction, the contractor shall submit a final report to the authority having jurisdiction certifying that all construction work incorporated into the *seismic-force-resisting system* and other *designated seismic systems* was constructed substantially in compliance with the approved *construction documents*.

Chapter 4

GROUND MOTION

4.1 PROCEDURES FOR DETERMINING MAXIMUM CONSIDERED EARTHQUAKE AND DESIGN EARTHQUAKE GROUND MOTION ACCELERATIONS AND RESPONSE SPECTRA: Ground motion accelerations, represented by response spectra and coefficients derived from these spectra, shall be determined in accordance with the general procedure of Sec. 4.1.2 or the site-specific procedure of Sec. 4.1.3. The general procedure in which spectral response acceleration parameters for the *maximum considered earthquake ground motions* are derived using Maps 1 through 24, modified by site coefficients to include local site effects and scaled to design values, are permitted to be used for any *structure* except as specifically indicated in the *Provisions*. The site-specific procedure also is permitted to be used for any *structure* and shall be used where specifically required by the *Provisions*.

4.1.1 Maximum Considered Earthquake Ground Motions: The *maximum considered earthquake ground motions* shall be as represented by the mapped spectral response acceleration at short periods, S_S, and at 1 second, S_1, obtained from Maps 1 through 24 of the *Provisions*, respectively, and adjusted for *Site Class* effects using the site coefficients of Sec. 4.1.2.4. When a site-specific procedure is used, *maximum considered earthquake ground motion* shall be determined in accordance with Sec. 4.1.3.

4.1.2 General Procedure for Determining Maximum Considered Earthquake and Design Spectral Response Accelerations: The mapped *maximum considered earthquake* spectral response acceleration at short periods, S_S ,and at 1 second ,S_1, shall be determined from Maps 1 through 24.

For *structures* located within those regions of the maps having values of the short period spectral response acceleration, S_S, less than or equal to 0.15 and values of the 1 second period spectral response acceleration, S_1, less than or equal to 0.04, accelerations need not be determined. Such *structures* are permitted to be directly categorized as *Seismic Design Category* A in accordance with Sec. 4.2.1.

For all other *structures*, the *Site Class* shall be determined in accordance with Sec. 4.1.2.1. The *maximum considered earthquake* spectral response accelerations adjusted for *Site Class* effects, S_{MS} and S_{M1}, shall be determined in accordance with Sec. 4.1.2.4 and the design spectral response accelerations, S_{DS} and S_{D1}, shall be determined in accordance with Sec. 4.1.2.5. The general response spectrum, when required by the *Provisions*, shall be determined in accordance with Sec. 4.1.2.6.

4.1.2.1 Site Class Definitions: For all *structures* located within those regions of the maps having values of the short period spectral response acceleration, S_S, greater than 0.15 or values of the 1 second period spectral response acceleration, S_1, greater than 0.04, the site shall be classified as one of the following classes:

A Hard rock with measured shear wave velocity, $\bar{v}_s$ > 5,000 ft/sec (1500 m/s)

B Rock with 2,500 ft/sec < $\bar{v}_s \leq$ 5,000 ft/sec (760 m/s < $\bar{v}_s \leq$ 1500 m/s)

C Very dense soil and soft rock with 1,200 ft/sec < $\bar{v}_s \leq$ 2,500 ft/sec (360 m/s < $\bar{v}_s \leq$ 760 m/s) or with either $\bar{N}$ > 50 or $\bar{s}_u$ > 2,000 psf (100 kPa)

D Stiff soil with 600 ft/sec $\leq \bar{v}_s \leq$ 1,200 ft/sec (180 m/s $\leq \bar{v}_s \leq$ 360 m/s) or with either 15 $\leq \bar{N} \leq$ 50 or 1,000 psf $\leq \bar{s}_u \leq$ 2,000 psf (50 kPa $\leq \bar{s}_u \leq$ 100 kPa)

E A soil profile with $\bar{v}_s$ < 600 ft/sec (180 m/s) or with either

$\bar{N}$ < 15 $\bar{s}_u$ < 1,000 psf or any profile with more than 10 ft (3 m) of soft clay defined as soil with PI > 20, $w \geq$ 40 percent, and s_u < 500 psf (25 kPa)

F Soils requiring site-specific evaluations:

1. Soils vulnerable to potential failure or collapse under seismic loading such as liquefiable soils, quick and highly sensitive clays, and collapsible weakly cemented soils.

   Exception: For structures having fundamental periods of vibration equal to or less than 0.5 second, site-specific evaluations are not required to determine spectral accelerations for liquefiable soils. Rather, the *Site Class* may be determined in accordance with Sec. 4.1.2.2 and the corresponding values of F_a and F_v determined from Tables 4.1.2.4a and 4.1.2.4b.

2. Peats and/or highly organic clays (H > 10 ft [3 m] of peat and/or highly organic clay where H = thickness of soil)

3. Very high plasticity clays (H > 25 ft [8 m] with PI > 75)

4. Very thick soft/medium stiff clays (H > 120 ft [36 m])

When the soil properties are not known in sufficient detail to determine the *Site Class*, *Site Class* D shall be used. *Site Classes* E or F need not be assumed unless the authority having jurisdiction determines that *Site Classes* E or F could be present at the site or in the event that *Site Classes* E or F are established by geotechnical data.

4.1.2.2 Steps for Classifying a Site (also see Table 4.1.2.2 below):

Step 1: Check for the four categories of *Site Class* F requiring site-specific evaluation. If the site corresponds to any of these categories, classify the site as *Site Class* F and conduct a site-specific evaluation.

Step 2: Check for the existence of a total thickness of soft clay > 10 ft (3 m) where a soft clay layer is defined by: s_u < 500 psf (25 kPa), $w \geq$ 40 percent, and PI > 20. If these criteria are satisfied, classify the site as *Site Class* E.

Step 3: Categorize the site using one of the following three methods with $\bar{v}_s$, $\bar{N}$, and $\bar{s}_u$ computed in all cases as specified by the definitions in Sec. 4.1.2.2:

a. $\bar{v}_s$ for the top 100 ft (30 m) ($\bar{v}_s$ method)

b. $\bar{N}$ for the top 100 ft (30 m) ($\bar{N}$ method)

c. $\bar{N}_{ch}$ for cohesionless soil layers (PI < 20) in the top 100 ft (30 m) and average $\bar{s}_u$ for cohesive soil layers (PI > 20) in the top 100 ft (30 m) ($\bar{s}_u$ method).

TABLE 4.1.2.2 Site Classification

Site Class	$\bar{v}_s$	$\bar{N}$ **or** $\bar{N}_{ch}$	$\bar{s}_u$
E	< 600 fps (< 180 m/s)	< 15	< 1,000 psf (< 50 kPa)
D	600 to 1,200 fps (180 to 360 m/s)	15 to 50	1,000 to 2,000 psf (50 to 100 kPa)
C	> 1,200 to 2,500 fps (360 to 760 m/s)	> 50	> 2,000 (> 100 kPa)

NOTE: If the $\bar{s}_u$ method is used and the $\bar{N}_{ch}$ and $\bar{s}_u$ criteria differ, select the category with the softer soils (e.g., use *Site Class* E instead of D).

The shear wave velocity for rock, *Site Class* B, shall be either measured on site or estimated for competent rock with moderate fracturing and weathering. Softer and more highly fractured and weathered rock shall either be measured on site for shear wave velocity or classified as *Site Class* C.

The hard rock category, *Site Class* A, shall be supported by shear wave velocity measurements either on site or on profiles of the same rock type in the same formation with an equal or greater degree of weathering and fracturing. Where hard rock conditions are known to be continuous to a depth of 100 ft (30 m), surficial shear wave velocity measurements may be extrapolated to assess $\bar{v}_{s.}$

The rock categories, *Site Classes* A and B, shall not be used if there is more than 10 ft (3 m) of soil between the rock surface and the bottom of the spread footing or mat foundation.

4.1.2.3 Definitions of Site Class Parameters: The definitions presented below apply to the upper 100 ft (30 m) of the site profile. Profiles containing distinctly different soil layers shall be subdivided into those layers designated by a number that ranges from 1 to *n* at the bottom where there are a total of *n* distinct layers in the upper 100 ft (30 m). The symbol *i* then refers to any one of the layers between 1 and *n*.

v_{si} is the shear wave velocity in ft/sec (m/s).

d_i is the thickness of any layer between 0 and 100 ft (30 m),

$\bar{v}_s$ is:

$$\bar{v}_s = \frac{\sum_{i=1}^{n} d_i}{\sum_{i=1}^{n} \frac{d_i}{v_{si}}} \qquad (4.1.2.3\text{-}1)$$

where $\sum_{i=1}^{n} d_i$ is equal to 100 ft (30 m)

N_i is the Standard Penetration Resistance (ASTM D1586-84) not to exceed 100 blows/ft as directly measured in the field without corrections.

$\overline{N}$ is:

$$\overline{N} = \frac{\sum_{i=1}^{n} d_i}{\sum_{i=1}^{n} \frac{d_i}{N_i}} \qquad (4.1.2.3\text{-}2)$$

$\overline{N}_{ch}$ is:

$$\overline{N_{ch}} = \frac{d_s}{\sum_{i=1}^{m} \frac{d_i}{N_i}} \qquad (4.1.2.3\text{-}3)$$

where $\sum_{i=1}^{m} d_i = d_s$.

(Use only d_i and N_i for cohesionless soils.)

d_s is the total thickness of cohesionless soil layers in the top 100 ft (30 m).

s_{ui} is the undrained shear strength in psf (kPa), not to exceed 5,000 psf (250 kPa), ASTM D2166-91 or D2850-87.

$\overline{s}_u$ is:

$$\overline{s}_u = \frac{d_c}{\sum_{i=1}^{k} \frac{d_i}{s_{ui}}} \qquad (4.1.2.3\text{-}4)$$

where $\sum_{i=1}^{k} d_i = d_c$.

d_c is the total thickness (100 - d_s) of cohesive soil layers in the top 100 ft (30 m).

PI is the plasticity index, ASTM D4318-93.

w is the moisture content in percent, ASTM D2216-92.

4.1.2.4 Site Coefficients and Adjusted Maximum Considered Earthquake Spectral Response Acceleration Parameters: The *maximum considered earthquake* spectral response acceleration for short periods, S_{MS}, and at 1 second, S_{M1}, adjusted for *site class* effects, shall be determined by Eq. 4.1.2.4-1 and 4.1.2.4-2, respectively:

$$S_{MS} = F_a S_s \qquad (4.1.2.4\text{-}1)$$

and

$$S_{M1} = F_v S_1 \qquad (4.1.2.4\text{-}2)$$

where *site coefficients* F_a and F_v are defined in Tables 4.1.2.4a and b, respectively.

TABLE 4.1.2.4a Values of F_a as a Function of Site Class and Mapped Short-Period Maximum Considered Earthquake Spectral Acceleration

Site Class	Mapped Maximum Considered Earthquake Spectral Response Acceleration at Short Periods				
	$S_S \le 0.25$	$S_S = 0.50$	$S_S = 0.75$	$S_S = 1.00$	$S_S \ge 1.25$
A	0.8	0.8	0.8	0.8	0.8
B	1.0	1.0	1.0	1.0	1.0
C	1.2	1.2	1.1	1.0	1.0
D	1.6	1.4	1.2	1.1	1.0
E	2.5	1.7	1.2	0.9	0.9

Site Class	Mapped Maximum Considered Earthquake Spectral Response Acceleration at Short Periods				
	$S_S \le 0.25$	$S_S = 0.50$	$S_S = 0.75$	$S_S = 1.00$	$S_S \ge 1.25$
F	*a*	*a*	*a*	*a*	*a*

NOTE: Use straight line interpolation for intermediate values of S_S.

[a] Site-specific geotechnical investigation and dynamic site response analyses shall be performed. Exception: For structures with periods of vibration equal to or less than 0.5 second, values of F_a for liquefiable soils may be assumed equal to the values for the *Site Class* determined without regard to liquefaction in Step 3 of Sec. 4.1.2.2.

TABLE 4.1.2.4b Values of F_v as a Function of Site Class and Mapped 1 Second Period Maximum Considered Earthquake Spectral Acceleration

Site Class	Mapped Maximum Considered Earthquake Spectral Response Acceleration at 1 Second Periods				
	$S_1 \le 0.1$	$S_1 = 0.2$	$S_1 = 0.3$	$S_1 = 0.4$	$S_1 \ge 0.5$
A	0.8	0.8	0.8	0.8	0.8
B	1.0	1.0	1.0	1.0	1.0
C	1.7	1.6	1.5	1.4	1.3
D	2.4	2.0	1.8	1.6	1.5
E	3.5	3.2	2.8	2.4	2.4
F	*a*	*a*	*a*	*a*	*a*

NOTE: Use straight line interpolation for intermediate values of S_1.

[a] Site-specific geotechnical investigation and dynamic site response analyses shall be performed. Exception: For structures with periods of vibration equal to or less than 0.5 second, values of F_v for liquefiable soils may be assumed equal to the values for the *Site Class* determined without regard to liquefaction in Step 3 of Sec. 4.1.2.2.

4.1.2.5 Design Spectral Response Acceleration Parameters: *Design earthquake* spectral response acceleration at short periods, S_{DS} , and at 1 second period, S_{D1}, shall be determined from Eq. 4.1.2.5-1 and 4.1.2.5-2, respectively:

$$S_{DS} = \frac{2}{3} S_{MS} \qquad (4.1.2.5\text{-}1)$$

and

$$S_{D1} = \frac{2}{3} S_{M1} \qquad (4.1.2.5\text{-}2)$$

4.1.2.6 General Procedure Response Spectrum: Where a design response spectrum is required by the *Provisions* and site-specific procedures are not used, the design response spectrum curve shall be developed as indicated in Figure 4.1.2.6 and as follows:

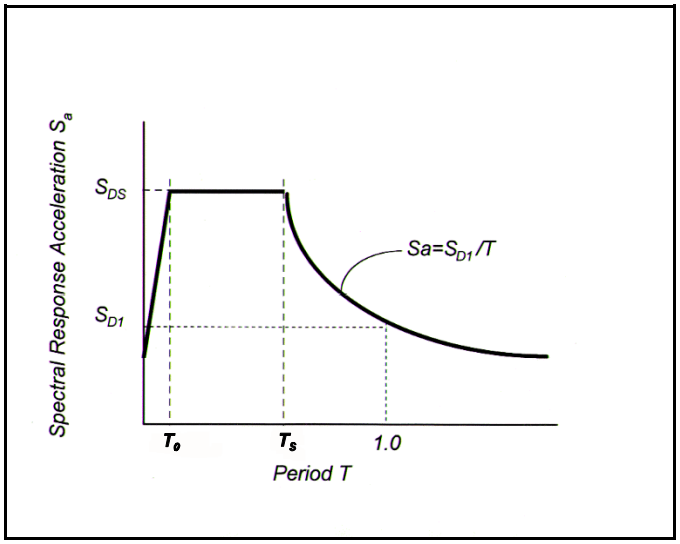

FIGURE 4.1.2.6 Design response spectrum.

1. For periods less than or equal to T_0, the design spectral response acceleration, S_a, shall be taken as given by Eq. 4.1.2.6-1:

$$S_a = 0.6\frac{S_{DS}}{T_o}T + 0.4\,S_{DS} \qquad (4.1.2.6\text{-}1)$$

2. For periods greater than or equal to T_0 and less than or equal to T_S, the design spectral response acceleration, S_a, shall be taken as equal to S_{DS}.

3. For periods greater than T_S, the design spectral response acceleration, S_a, shall be taken as given by Eq. 4.1.2.6-3:

$$S_a = \frac{S_{D1}}{T} \qquad (4.1.2.6\text{-}3)$$

where:

S_{DS} = the design spectral response acceleration at short periods,

S_{D1} = the design spectral response acceleration at 1 second period,

T = the fundamental period of the *structure* (sec),

T_0 = $0.2S_{D1}/S_{DS}$, and

T_S = S_{D1}/S_{DS}.

4.1.3 Site-Specific Procedure for Determining Ground Motion Accelerations: A site-specific study shall account for the regional seismicity and geology, the expected recurrence rates and maximum magnitudes of events on known faults and source zones, the location of the site with respect to these, near source effects if any, and the characteristics of subsurface site conditions.

4.1.3.1 Probabilistic Maximum Considered Earthquake: When site-specific procedures are utilized, the *maximum considered earthquake ground motion* shall be taken as that motion represented by a 5 percent damped acceleration response spectrum having a 2 percent probability of exceedance within a 50 year period. The *maximum considered earthquake* spectral response acceleration, S_{aM}, at any period, T, shall be taken from that spectrum.

> **Exception:** Where the spectral response ordinates for a 5 percent damped spectrum having a 2 percent probability of exceedance within a 50 year period at periods of 0.2 second or 1 second exceed the corresponding ordinate of the deterministic limit of Sec. 4.1.3.2, the *maximum considered earthquake ground motion* shall be taken as the lesser of the probabilistic *maximum considered earthquake ground motion* or the deterministic *maximum considered earthquake ground motion* of Sec. 4.1.3.3 but shall not be taken less than the deterministic limit ground motion of Sec. 4.1.3.2.

4.1.3.2 Deterministic Limit on Maximum Considered Earthquake Ground Motion: The deterministic limit on *maximum considered earthquake ground motion* shall be taken as the response spectrum determined in accordance with Figure 4.1.3.2, where F_a and F_v are determined in accordance with Sec. 4.1.2.4 with the value of S_S taken as 1.5 and the value of S_1 taken as 0.6.

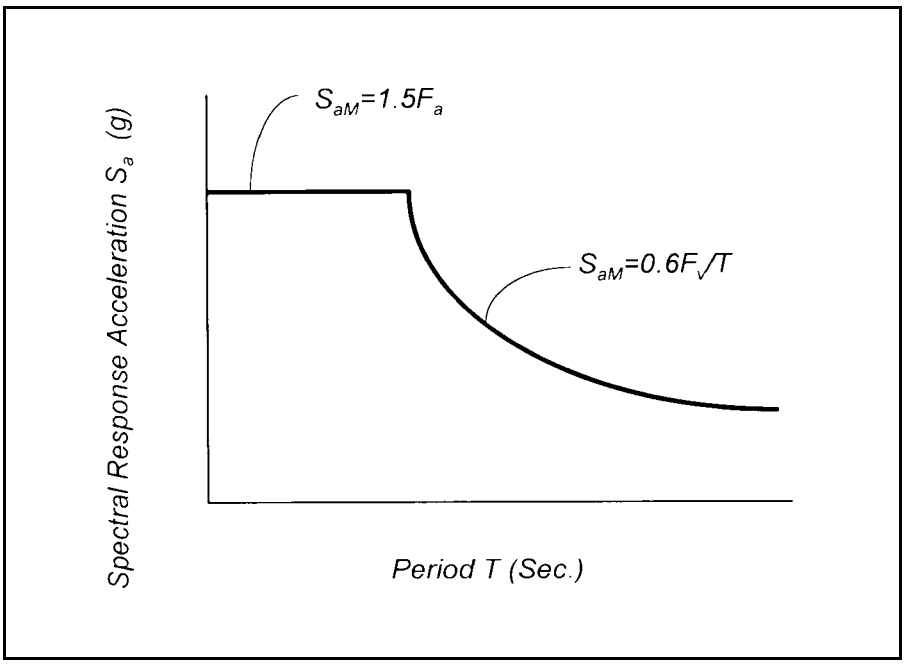

FIGURE 4.1.3.2 Deterministic limit on maximum considered earthquake response spectrum.

4.1.3.3 Deterministic Maximum Considered Earthquake Ground Motion: The deterministic *maximum considered earthquake ground motion* response spectrum shall be calculated as 150 percent of the median 5 percent damped spectral response accelerations, S_{aM}, at all periods resulting from a characteristic earthquake on any known active fault within the region.

4.1.3.5 Site-Specific Design Ground Motion: Where site-specific procedures are used to determine the *maximum considered earthquake ground motion* response spectrum, the design spectral response acceleration at any period shall be determined from Eq. 4.1.3.5:

$$S_a = \frac{2}{3} S_{aM} \qquad (4.1.3.5)$$

and shall be greater than or equal to 80 percent of the S_a determined by the general response spectrum in Sec. 4.1.2.6.

4.2 SEISMIC DESIGN CATEGORY: Each *structure* shall be assigned a *Seismic Design Category* in accordance with Sec. 4.2.1. *Seismic Design Categories* are used in the *Provisions* to determine permissible structural systems, limitations on height and irregularity, those components of the *structure* that must be designed for seismic resistance, and the types of lateral force analysis that must be performed.

4.2.1 Determination of Seismic Design Category: All *structures* shall be assigned to a *Seismic Design Category* based on their *Seismic Use Group* and the design spectral response acceleration coefficients, S_{DS} and S_{D1}, determined in accordance with Sec. 4.1.2.5. Each *building* and *structure* shall be assigned to the most severe *Seismic Design Category* in accordance with Table 4.2.1a or 4.2.1b, irrespective of the fundamental period of vibration of the *structure*, *T*.

TABLE 4.2.1a Seismic Design Category Based on Short Period Response Accelerations

Value of S_{DS}	Seismic Use Group		
	I	II	III
$S_{DS} < 0.167$	A	A	A
$0.167 \le S_{DS} < 0.33$	B	B	C
$0.33 \le S_{DS} < 0.50$	C	C	D
$0.50 \le S_{DS}$	D [a]	D [a]	D [a]

[a] *Seismic Use Group* I and II *structures* located on sites with mapped *maximum considered earthquake* spectral response acceleration at 1 second period, S_1, equal to or greater than 0.75 shall be assigned to *Seismic Design Category* E and *Seismic Use Group* III *structures* located on such sites shall be assigned to *Seismic Design Category* F.

TABLE 4.2.1b Seismic Design Category Based on 1 Second Period Response Accelerations

Value of S_{D1}	Seismic Use Group		
	I	**II**	**III**
$S_{D1} < 0.067$	A	A	A
$0.067 \leq S_{D1} < 0.133$	B	B	C
$0.133 \leq S_{D1} < 0.20$	C	C	D
$0.20 \leq S_{D1}$	D [a]	D [a]	D [a]

[a] *Seismic Use Group* I and II *structures* located on sites with mapped *maximum considered earthquake* spectral response acceleration at 1 second period, S_1, equal to or greater than 0.75 shall be assigned to *Seismic Design Category* E and *Seismic Use Group* III *structures* located on such sites shall be assigned to *Seismic Design Category* F.

4.2.2 Site Limitation for Seismic Design Categories E and F: A *structure* assigned to *Seismic Design Category* E or F shall not be sited where there is the potential for an active fault to cause rupture of the ground surface at the *structure*.

Exception: Detached one- and two-family dwellings of light-frame construction.

Chapter 5

STRUCTURAL DESIGN CRITERIA

5.1 REFERENCE DOCUMENT:

The following reference document shall be used for loads other than earthquake and for combinations of loads as indicated in this chapter:

ASCE 7 *Minimum Design Loads for Buildings and Other Structures*, ASCE 7, 1998

5.2 DESIGN BASIS:

5.2.1 General: The seismic analysis and design procedures to be used in the design of *buildings* and other *structures* and their *components* shall be as prescribed in this chapter.

The *structure* shall include complete lateral- and vertical-force-resisting systems capable of providing adequate *strength*, stiffness, and energy dissipation capacity to withstand the design ground motions within the prescribed limits of *deformation* and *strength* demand. The design ground motions shall be assumed to occur along any direction of the *structure*. The adequacy of the structural systems shall be demonstrated through construction of a mathematical model and evaluation of this model for the effects of the design ground motions. Unless otherwise required, this evaluation shall consist of a linear elastic analysis in which design *seismic forces* are distributed and applied throughout the height of the *structure* in accordance with the procedures in Sec. 5.3 or Sec. 5.4. The corresponding structural *deformations* and internal forces in all members of the *structure* shall be determined and evaluated against acceptance criteria contained in the *Provisions*. Approved alternative procedure based on general principles of engineering mechanics and dynamics are permitted to be used to establish the *seismic forces* and their distribution. If an alternative procedure is used, the corresponding internal forces and *deformations* in the members shall be determined using a model consistent with the procedure adopted.

Individual members shall be provided with adequate *strength* to resist the shears, axial forces, and moments determined in accordance with the *Provisions*, and connections shall develop the *strength* of the connected members or the forces indicated above. The *deformation* of the *structure* shall not exceed the prescribed limits.

A continuous load path, or paths, with adequate *strength* and stiffness shall be provided to transfer all forces from the point of application to the final point of resistance. The foundation shall be designed to accommodate the forces developed or the movements imparted to the *structure* by the design ground motions. In the determination of the foundation design criteria, special recognition shall be given to the dynamic nature of the forces, the expected ground motions, and the design basis for *strength* and energy dissipation capacity of the *structure*.

5.2.2 Basic Seismic-Force-Resisting Systems: The basic lateral and vertical *seismic-force-resisting system* shall conform to one of the types indicated in Table 5.2.2 subject to the

limitations on height based on *Seismic Design Category* indicated in the table. Each type is subdivided by the types of vertical element used to resist lateral *seismic forces*. The appropriate response modification coefficient, R, system overstrength factor, Ω_0, and deflection amplification factor, C_d, indicated in Table 5.2.2 shall be used in determining the *base shear*, element design forces, and design *story* drift as indicated in the *Provisions*.

Seismic-force-resisting systems that are not contained in Table 5.2.2 shall be permitted if analytical and test data are submitted that establish the dynamic characteristics and demonstrate the lateral force resistance and energy dissipation capacity to be equivalent to the structural systems listed in Table 5.2.2 for equivalent response modification coefficient, R, system o-verstrength coefficient, Ω_0, and deflection amplification factor, C_d, values.

Special framing requirements are indicated in Sec. 5.2.6 and in Chapters 8, 9, 10, 11, and 12 for *structures* assigned to the various *Seismic Design Categories*.

5.2.2.1 Dual System: For a dual system, the *moment frame* shall be capable of resisting at least 25 percent of the design forces. The total seismic force resistance is to be provided by the combination of the *moment frame* and the *shear walls* or *braced frames* in proportion to their rigidities.

5.2.2.2 Combinations of Framing Systems: Different *seismic-force-resisting systems* are permitted along the two orthogonal axes of the *structure*. Combinations of *seismic-force-resisting systems* shall comply with the requirements of this section.

5.2.2.2.1 R and Ω_0 Factors: The response modification coefficient, R, in the direction under consideration at any *story* shall not exceed the lowest response modification factor, R, for the *seismic-force-resisting system* in the same direction considered above that *story* excluding penthouses. For other than dual systems where a combination of different structural systems is utilized to resist lateral forces in the same direction, the value of R used in that direction shall not be greater than the least value of any of the systems utilized in the same direction. If a system other than a dual system with a response modification coefficient, R, with a value of less than 5 is used as part of the *seismic-force-resisting system* in any direction of the *structure*, the lowest such value shall be used for the entire *structure*. The system overstrength factor, Ω_0, in the direction under consideration at any *story* shall not be less than the largest value of this factor for the *seismic-force-resisting system* in the same direction considered above that *story*.

Exceptions:

1. Supported structural systems with a weight equal to or less than 10 percent of the weight of the *structure*.
2. Detached one- and two-family dwellings of light-frame construction.

5.2.2.2.2 Combination Framing Detailing Requirements: The detailing requirements of Sec. 5.2.6 required by the higher response modification coefficient, R, shall be used for structural *components* common to systems having different response modification coefficients.

5.2.2.3 Seismic Design Categories B and C: The structural framing system for *structures* assigned to *Seismic Design Categories* B and C shall comply with the *structure* height and structural limitations in Table 5.2.2.

Table 5.2.2 Design Coefficients and Factors for Basic *Seismic-Force-Resisting* Systems

Basic *Seismic-Force-Resisting System*	Detailing Reference Section	Response Modification Coefficient, R^a	System Overstrength Factor, Ω_0 [g]	Deflection Amplification Factor, C_d [b]	System Limitations and Building Height Limitations (ft) by Seismic Design Category[c]				
					B	C	D [d]	E [e]	F [e]
Bearing Wall Systems									
Ordinary steel concentrically braced frames -- Light framed wall	8.6	4	2	3½	NL	NL	65	65	65
Special *reinforced concrete shear walls*	9.3.2.4	5	2½	5	NL	NL	160	160	100
Ordinary *reinforced concrete shear walls*	9.3.2.3	4	2½	4	NL	NL	NP	NP	NP
Detailed *plain concrete shear walls*	9.3.2.2	2½	2½	2	NL	NL	NP	NP	NP
Ordinary *plain concrete shear walls*	9.3.2.1	1½	2½	1½	NL	NP	NP	NP	NP
Special reinforced masonry *shear walls*	11.11.5	3½	2½	3½	NL	NL	160	160	100
Intermediate reinforced masonry *shear walls*	11.11.4	2½	2½	2¼	NL	NL	NP	NP	NP
Ordinary reinforced masonry *shear walls*	11.11.3	2	2½	1¾	NL	NP	NP	NP	NP
Detailed plain masonry *shear walls*	11.11.2	2	2½	1¾	NL	160	NP	NP	NP
Ordinary plain masonry *shear walls*	11.11.1	1½	2½	1¼	NL	NP	NP	NP	NP
Light frame walls with *shear panels*	8.6, 12.3.4, 12.4	6½	3	4	NL	NL	65	65	65
Building Frame Systems									
Steel *eccentrically braced frames*, moment resisting, connections at columns away from links	AISC Seismic, Part I, Sec. 15	8	2	4	NL	NL	160	160	100
Steel *eccentrically braced frames*, nonmoment resisting, connections at columns away from links	AISC Seismic, Part I, Sec. 15	7	2	4	NL	NL	160	160	100

Basic *Seismic-Force-Resisting System*	Detailing Reference Section	Response Modification Coefficient, R^a	System Overstrength Factor, Ω_0 [g]	Deflection Amplification Factor, C_d [b]	System Limitations and Building Height Limitations (ft) by Seismic Design Category[c]				
					B	C	D [d]	E [e]	F [e]
Special steel *concentrically braced frames*	AISC Seismic, Part I, Sec. 13	6	2	5	NL	NL	160	160	100
Ordinary steel *concentrically braced frames*	8.4.4; AISC Seismic	5	2	4½	NL	NL	35[k]	35[k]	NP[k]
Special *reinforced concrete shear walls*	9.3.2.4	6	2½	5	NL	NL	160	160	100
Ordinary *reinforced concrete shear walls*	9.3.2.3	5	2½	4½	NL	NL	NP	NP	NP
Detailed *plain concrete shear walls*	9.3.2.2	3	2½	2½	NL	NL	NP	NP	NP
Ordinary *plain concrete shear walls*	9.3.2.1	2	2½	2	NL	NP	NP	NP	NP
Composite *eccentrically braced frames*	AISC Seismic, Part II, Sec. 14	8	2	4	NL	NL	160	160	100
Composite *concentrically braced frames*	AISC Seismic, Part II, Sec. 13	5	2	4½	NL	NL	160	160	100
Ordinary composite *braced frames*	AISC Seismic, Part II, Sec. 12	3	2	3	NL	NL	NP	NP	NP
Composite steel plate *shear walls*	AISC Seismic, Part II, Sec. 17	6½	2½	5½	NL	NL	160	160	100
Special composite *reinforced concrete shear walls* with steel elements	AISC Seismic, Part II, Sec. 16	6	2½	5	NL	NL	160	160	100
Ordinary composite *reinforced concrete shear walls* with steel elements	AISC Seismic. Part II, Sec. 15	5	2½	4½	NL	NL	NP	NP	NP
Special reinforced masonry *shear walls*	11.11.5	4½	2½	4	NL	NL	160	160	100
Intermediate reinforced masonry *shear walls*	11.11.4	3	2½	2½	NL	NL	NP	NP	NP
Ordinary reinforced masonry *shear walls*	11.11.3	2½	2½	2¼	NL	NP	NP	NP	NP

Basic *Seismic-Force-Resisting System*	Detailing Reference Section	Response Modification Coefficient, R^a	System Overstrength Factor, Ω_0 [g]	Deflection Amplification Factor, C_d [b]	System Limitations and Building Height Limitations (ft) by Seismic Design Category[c]				
					B	C	D [d]	E [e]	F [e]
Detailed plain masonry *shear walls*	11.11.2	2½	2½	2¼	NL	160	NP	NP	NP
Ordinary plain masonry *shear walls*	11.11.1	1½	2½	1¼	NL	NP	NP	NP	NP
Light frame walls with *shear panels*	8.6, 12.3.4, 12.4	7	2½	4½	NL	NL	160	160	160
Moment Resisting Frame Systems									
Special steel *moment frames*	AISC Seismic, Part I, Sec. 9	8	3	5½	NL	NL	NL	NL	NL
Special steel truss *moment frames*	AISC Seismic, Part I, Sec. 12	7	3	5½	NL	NL	160	100	NP
Intermediate steel *moment frames*	AISC Seismic, Part I, Sec. 10	4½.	3	4	NL	NL	35[i]	NP[i,j]	NP[i,j]
Ordinary steel *moment frames*	AISC Seismic, Part I, Sec. 11	3½	3	3	NL	NL	NP[i,j]	NP [i,j]	NP [i,j]
Special reinforced concrete moment frames	9.3.1.3	8	3	5½	NL	NL	NL	NL	NL
Intermediate reinforced concrete moment frames	9.3.1.2	5	3	4½	NL	NL	NP	NP	NP
Ordinary reinforced concrete moment frames	9.3.1.1	3	3	2½	NL	NP	NP	NP	NP
Special composite *moment frames*	AISC Seismic, Part II, Sec. 9	8	3	5½	NL	NL	NL	NL	NL
Intermediate composite *moment frames*	AISC Seismic, Part II, Sec. 10	5	3	4½	NL	NL	NP	NP	NP
Composite partially restrained *moment frames*	AISC Seismic, Part II, Sec. 8	6	3	5½	160	160	100	NP	NP
Ordinary composite *moment frames*	AISC Seismic, Part II, Sec. 11	3	3	2½	NL	NP	NP	NP	NP

Basic *Seismic-Force-Resisting System*	Detailing Reference Section	Response Modification Coefficient, R^a	System Overstrength Factor, Ω_0 [g]	Deflection Amplification Factor, C_d [b]	System Limitations and Building Height Limitations (ft) by Seismic Design Category[c]				
					B	C	D [d]	E [e]	F [e]
Special masonry moment frames	11.2	5½	3	5	NL	NL	160	160	100
Dual Systems with *Special Moment Frames* Capable of Resisting at Least 25% of Prescribed *Seismic Forces*									
Steel *eccentrically braced frames*, moment resisting connections, at columns away from links	AISC Seismic,Part I, Sec. 15	8	2½	4	NL	NL	NL	NL	NL
Steel *eccentrically braced frames*, non-moment resisting connections, at columns away from links	AISC Seismic, Part I, Sec. 15	7	2½	4	NL	NL	NL	NL	NL
Special steel *concentrically braced frames*	AISC Seismic, Part I, Sec. 13	8	2½	6½	NL	NL	NL	NL	NL
Special *reinforced concrete shear walls*	9.3.2.4	8	2½	6½	NL	NL	NL	NL	NL
Ordinary *reinforced concrete shear walls*	9.3.2.3	7	2½	6	NL	NL	NP	NP	NP
Composite *eccentrically braced frames*	AISC Seismic, Part II, Sec. 14	8	2½	4	NL	NL	NL	NL	NL
Composite *concentrically braced frames*	AISC Seismic, Part II, Sec. 13	6	2½	5	NL	NL	NL	NL	NL
Composite steel plate *shear walls*	AISC Seismic, Part II, Sec. 17	8	2½	6½	NL	NL	NL	NL	NL
Special composite *reinforced concrete shear walls* with steel elements	AISC Seismic, Part II, Sec. 16	8	2½	6½	NL	NL	NL	NL	NL
Ordinary composite *reinforced concrete shear walls* with steel elements	AISC Seismic, Part II, Sec. 15	7	2½	6	NL	NL	NP	NP	NP
Special reinforced masonry *shear walls*	11.11.5	7	3	6½	NL	NL	NL	NL	NL
Intermediate reinforced masonry *shear walls*	11.11.4	6½	3	5½	NL	NL	NL	NP	NP
Dual Systems with *Intermediate Moment Frames* Capable of Resisting at Least 25% of Prescribed *Seismic Forces*									

Basic *Seismic-Force-Resisting System*	Detailing Reference Section	Response Modification Coefficient, R^a	System Overstrength Factor, Ω_0 [g]	Deflection Amplification Factor, C_d [b]	System Limitations and Building Height Limitations (ft) by Seismic Design Category[c]				
					B	C	D [d]	E [e]	F [e]
Special steel *concentrically braced frames* [f]	AISC Seismic, Part I, Sec. 13	4½	2½	4	NL	NL	35[i]	NP[i,j]	NP[i,j]
Special *reinforced concrete shear walls*	9.3.2.4	6	2½	5	NL	NL	160	100	100
Ordinary *reinforced concrete shear walls*	9.3.2.3	5½	2½	4½	NL	NL	NP	NP	NP
Ordinary reinforced masonry *shear walls*	11.11.3	3	3	2½	NL	160	NP	NP	NP
Intermediate reinforced masonry *shear walls*	11.11.4	5	3	4½	NL	NL	160	NP	NP
Composite *concentrically braced frames*	AISC Seismic, Part II, Sec. 13	5	2½	4½	NL	NL	160	100	NP
Ordinary composite *braced frames*	AISC Seismic, Part II, Sec. 12	4	2½	3	NL	NL	NP	NP	NP
Ordinary composite *reinforced concrete shear walls* with steel elements	AISC Seismic, Part II, Sec. 15	5½	2½	4½	NL	NL	NP	NP	NP
Inverted Pendulum Systems and Cantilevered Column Systems									
Special steel *moment frames*	AISC Seismic, Part I, Sec. 9	2½	2	2½	NL	NL	NL	NL	NL
Ordinary steel *moment frames*	AISC Seismic, Part I, Sec. 11	1¼	2	2½	NL	NL	NP	NP	NP
Special reinforced concrete moment frames	9.3.1.3	2½	2	1¼	NL	NL	NL	NL	NL
Structural Steel Systems Not Specifically Detailed for Seismic Resistance	AISC-ASD, AISC-LRFD, AISI	3	3	3	NL	NL	NP	NP	NP

NOTES FOR TABLE 5.2.2

[a] Response modification coefficient, *R*, for use throughout the *Provisions*.

[b] Deflection amplification factor, C_d, for use in Sec. 5.4.6.1 and 5.4.6.2.

[c] NL = not limited and NP = not permitted. If using metric units, 100 ft approximately equals 30 m and 160 ft approximately equals 50 m. Heights are measured from the base of the structure as defined in Sec. 2.1.

[d] See Sec. 5.2.2.4.1 for a description of *building* systems limited to *buildings* with a height of 240 ft (70 m) or less.

[e] See Sec. 5.2.2.5 for *building* systems limited to *buildings* with a height of 160 ft (50 m) or less.

[f] An *ordinary moment frame* is permitted to be used in lieu of an *Intermediate moment frame* in *Seismic Design Categories* B and C.

[g] The tabulated value of the *overstrength factor,* Ω_0, may be reduced by subtracting ½ for structures with flexible *diaphragms* but shall not be taken as less than 2 for any structure.

[i] Steel *ordinary moment frames* and *intermediate moment frames* are permitted in *single-story buildings* up to a height of 60 ft when the moment *joints* of field connections are constructed of bolted end plates and the *dead load* of the roof does not exceed 15 psf.

[j] Steel *ordinary moment frames* are permitted in *buildings* up to a height of 35 ft where the *dead load* of the walls, floors, and roofs does not exceed 15 psf.

[k] *Steel ordinary braced frames* are permitted in single-story buildings up to a height of 60 ft when the dead load of the roof does not exceed 15 psf and in penthouse structures.

5.2.2.4 Seismic Design Categories D and E: The structural framing system for a *structure* assigned to *Seismic Design Categories* D and E shall comply with Sec. 5.2.2.3 and the additional requirements of this section.

5.2.2.4.1 Limited Building Height: The height limit in Table 5.2.2 is permitted to be increased to 240 ft (70 m) in *buildings* that have steel *braced frames* or concrete cast-in-place *shear walls*. Such *buildings* shall be configured such that the *braced frames* or *shear walls* arranged in any one plane conform to the following:

1. The *braced frames* or cast-in-place special reinforced concrete *shear walls* in any one plane shall resist no more than 60 percent of the total *seismic forces* in each direction, neglecting torsional effects, and
2. The seismic force in any *braced frame* or *shear wall* resulting from torsional effects shall not exceed 20 percent of the total seismic force in that *braced frame* or *shear wall*.

5.2.2.4.2 Interaction Effects: *Moment frames* that are enclosed or adjoined by more rigid elements not considered to be part of the *seismic-force-resisting system* shall be designed so that the action or failure of those elements will not impair the vertical load and *seismic-force*-resisting capability of the frame. The design shall consider and provide for the effect of these rigid elements on the structural system at *structure* deformations corresponding to the design *story* drift, Δ, as determined in Sec. 5.4.6. In addition, the effects of these elements shall be considered when determining whether a *structure* has one or more of the irregularities defined in Sec. 5.2.3.

5.2.2.4.3 Deformational Compatibility: Every structural *component* not included in the *seismic-force-resisting system* in the direction under consideration shall be designed to be adequate for the vertical load-carrying capacity and the induced moments and shears resulting from the design *story* drift, Δ, as determined in accordance with Sec. 5.4.6 (also see Sec. 5.2.7).

> **Exception:** Beams and columns and their connections not designed as part of the lateral-force-resisting system but meeting the detailing requirements for either *intermediate moment frames* or *special moment frames* are permitted to be designed to be adequate for the vertical load-carrying capacity and the induced moments and shears resulting from the deformation of the *building* under the application of the design *seismic forces*.

When determining the moments and shears induced in *components* that are not included in the *seismic-force-resisting system* in the direction under consideration, the stiffening effects of adjoining rigid structural and nonstructural elements shall be considered and a rational value of member and restraint stiffness shall be used.

5.2.2.4.4 Special Moment Frames: A *special moment frame* that is used but not required by Table 5.2.2 is permitted to be discontinued and supported by a more rigid system with a lower response modification coefficient, R, provided the requirements of Sec. 5.2.6.2.3 and 5.2.6.4.2 are met. Where a *special moment frame* is required by Table 5.2.2, the frame shall be continuous to the foundation.

5.2.2.5 Seismic Design Category F: The framing systems of *buildings* assigned to *Seismic Design Category* F shall conform to the requirements of Sec. 5.2.2.4 for *Seismic Design Categories* D and E and to the additional requirements and limitations of this section. The height limitation of Sec. 5.2.2.4.1 shall be reduced from 240 ft to 160 ft (70 to 50 m).

5.2.3 Structure Configuration: *Structures* shall be classified as regular or irregular based upon the criteria in this section. Such classification shall be based on the plan and vertical configuration.

5.2.3.1 Diaphragm Flexibility: *Diaphragms* constructed of untopped steel decking, *wood structural panels*, or similar panelized construction shall be considered flexible in *structures* having concrete or masonry *shear walls*. *Diaphragms* constructed of *wood structural panels* shall be considered rigid in light-frame *structures* using structural panels for lateral load resistance. *Diaphragms* of other types shall be considered flexible when the maximum lateral *deformation* of the *diaphragm* is more than two times the average *story* drift of the associated *story*. The loadings used for this calculation shall be those prescribed by Sec. 5.4

5.2.3.2 Plan Irregularity: *Structures* having one or more of the features listed in Table 5.2.3.2 shall be designated as having plan structural irregularity and shall comply with the requirements in the sections referenced in Table 5.2.3.2.

5.2.3.3 Vertical Irregularity: *Structures* having one or more of the features listed in Table 5.2.3.3 shall be designated as having vertical irregularity and shall comply with the requirements in the sections referenced in Table 5.2.3.3.

Exceptions:

1. Structural irregularities of Types 1a, 1b, or 2 in Table 5.2.3.3 do not apply where no *story drift ratio* under design lateral load is greater than 130 percent of the *story drift ratio* of the *story* immediately above. Torsional effects need not be considered in the calculation of *story* drifts for the purpose of this determination. The *story drift ratio* relationship for the top two *stories* of the *structure* are not required to be evaluated.

2. Irregularities Types 1a, 1b, and 2 of Table 5.2.3.3 are not required to be considered for one-*story structures* or for two-*story structures* in *Seismic Design Categories* A, B, C, or D.

TABLE 5.2.3.2 Plan Structural Irregularities

Irregularity Type and Description		Reference Section	Seismic Design Category Application
1a	**Torsional Irregularity – to be considered when diaphragms are not flexible** Torsional irregularity shall be considered to exist when the maximum *story* drift, computed including accidental torsion, at one end of the *structure* transverse to an axis is more than 1.2 times the average of the *story* drifts at the two ends of the *structure*.	5.2.6.4.2 5.4.4	D, E, and F C, D, E, and F
1b	**Extreme Torsional Irregularity -- to be considered when diaphragms are not flexible** Extreme torsional irregularity shall be considered to exist when the maximum *story* drift, computed including accidental torsion, at one end of the *structure* transverse to an axis is more than 1.4 times the average of the *story* drifts at the two ends of the *structure*.	5.2.6.4.2 5.4.4 5.2.6.5.1	D, E, and F C, D, E, and F E and F
2	**Re-entrant Corners** Plan configurations of a *structure* and its lateral-force-resisting system contain re-entrant corners where both projections of the *structure* beyond a re-entrant corner are greater than 15 percent of the plan dimension of the *structure* in the given direction.	5.2.6.4.2	D, E, and F
3	**Diaphragm Discontinuity** Diaphragms with abrupt discontinuities or variations in stiffness including those having cutout or open areas greater than 50 percent of the gross enclosed diaphragm area or changes in effective diaphragm stiffness of more than 50 percent from one *story* to the next.	5.2.6.4.2	D, E, and F
4	**Out-of-Plane Offsets** Discontinuities in a lateral force resistance path such as out-of-plane offsets of the vertical elements.	5.2.6.4.2 5.2.6.2.10	D, E, and F B, C, D, E, and F
5	**Nonparallel Systems** The vertical lateral-force-resisting elements are not parallel to or symmetric about the major orthogonal axes of the lateral-force-resisting system.	5.2.5.2	C, D, E, and F

TABLE 5.2.3.3 Vertical Structural Irregularities

Irregularity Type and Description		Reference Section	Seismic Design Category Application
1a	**Stiffness Irregularity – Soft Story** A soft *story* is one in which the lateral stiffness is less than 70 percent of that in the *story* above or less than 80 percent of the average stiffness of the three stories above.	5.2.5.1	D, E, and F
1b	**Stiffness Irregularity--Extreme Soft Story** An extreme soft *story* is one in which the lateral stiffness is less than 60 percent of that in the *story* above or less than 70 percent of the average stiffness of the three stories above.	5.2.5.1 5.2.6.5.1	D, E, and F E and F
2	**Weight (Mass) Irregularity** Mass irregularity shall be considered to exist where the effective mass of any *story* is more than 150 percent of the effective mass of an adjacent *story*. A roof that is lighter than the floor below need not be considered.	5.2.5.1	D, E, and F
3	**Vertical Geometric Irregularity** Vertical geometric irregularity shall be considered to exist where the horizontal dimension of the lateral-force-resisting system in any *story* is more than 130 percent of that in an adjacent *story*.	5.2.5.1	D, E, and F
4	**In-Plane Discontinuity in Vertical Lateral-Force Resisting Elements** An in-plane offset of the lateral-force-resisting elements greater than the length of those elements or a reduction in stiffness of the resisting element in the *story* below.	5.2.5.1 5.2.6.2.10 5.2.6.4.2	D, E, and F B, C, D, E, and F D, E, and F
5	**Discontinuity in Capacity – Weak Story** A weak *story* is one in which the *story* lateral *strength* is less than 80 percent of that in the *story* above. The *story strength* is the total *strength* of all seismic-resisting elements sharing the *story* shear for the direction under consideration.	5.2.6.2.3 5.2.5.1 5.2.6.5.1	B, C, D, E, and F D, E, and F E and F

5.2.4 Redundancy: A reliability factor, ρ, shall be assigned to all *structures* based on the extent of structural redundancy inherent in the lateral-force-resisting system.

5.2.4.1 Seismic Design Categories A, B, and C: For *structures* in *Seismic Design Categories* A, B and C, the value of ρ may be taken as 1.0.

5.2.4.2 Seismic Design Category D: For *structures* in *Seismic Design Category* D, ρ shall be taken as the largest of the values of ρ_x calculated at each *story* of the *structure* "x" in accordance with Eq. 5.2.4.2:

$$\rho_x = 2 - \frac{20}{r_{\max_x}\sqrt{A_x}} \qquad (5.2.4.2)$$

where:

r_{max_x} = the ratio of the design *story shear* resisted by the single element carrying the most shear force in the *story* to the total *story shear* for a given direction of loading. For *braced frames*, the value of r_{max_x} is equal to the lateral force *component* in the most heavily loaded brace element divided by the *story shear*. For *moment frames*, r_{max_x} shall be taken as the maximum of the sum of the shears in any two adjacent columns in the plane of a *moment frame* divided by the *story shear*. For columns common to two bays with moment resisting connections on opposite sides at the level under consideration, 70 percent of the shear in that column may be used in the column shear summation. For *shear walls*, r_{max_x} shall be taken equal to the maximum ratio, r_{ix}, calculated as the shear in each *wall* or *wall* pier multiplied by $10/l_w$ (the metric coefficient is $3.3/l_w$), where l_w is the *wall* or *wall* pier length in feet (m) divided by the *story* shear and where the ratio $10/l_w$ need not be taken greater than 1.0 for buildings of light frame construction. For dual systems, r_{max_x} shall be taken as the maximum value as defined above considering all lateral-load-resisting elements in the *story*. The lateral loads shall be distributed to elements based on relative rigidities considering the interaction of the dual system. For dual systems, the value of ρ need not exceed 80 percent of the value calculated above.

A_x = the floor area in square feet of the *diaphragm* level immediately above the *story*.

The value of ρ need not exceed 1.5, which is permitted to be used for any *structure*. The value of ρ shall not be taken as less than 1.0.

> **Exception**: For *structures* with lateral-force-resisting systems in any direction comprised solely of *special moment frames*, the lateral-force-resisting system shall be configured such that the value of ρ calculated in accordance with this section does not exceed 1.25.

The metric equivalent of Eq. 5.2.4.2 is:

$$\rho_x = 2 - \frac{6.1}{r_{\max_x}\sqrt{A_x}}$$

where A_x is in square meters.

5.2.4.3 Seismic Design Categories E and F: For *structures* in *Seismic Design Categories* E and F, the value of ρ shall be calculated as indicated in Section 5.2.4.2, above.

Exception: For *structures* with lateral-force-resisting systems in any direction comprised solely of *special moment frames*, the lateral-force-resisting system shall be configured such that the value of ρ calculated in accordance with Sec. 5.2.4.2 does not exceed 1.1.

5.2.5 Structural Analysis: A structural analysis conforming to one of the types permitted in Section 5.2.5.1 shall be made for all *structures*. Application of loading shall be as indicated in Sec. 5.2.5.2 and as required by the selected analysis procedure. All members of the *structure's seismic-force-resisting system* and their connections shall have adequate strength to resist the forces, Q_E, predicted by the analysis in combination with other loads as required by Sec. 5.2.7. Drifts predicted by the analysis shall be within the limits specified by Sec. 5.2.8. If a nonlinear analysis is performed, component deformation demands shall not exceed limiting values as indicated in Sec. 5.7.3.2.

Exception: For *structures* in *Seismic Design Category* A, drift need not be evaluated.

5.2.5.1 Analysis Procedures: The structural analysis required by Sec. 5.2.5 shall consist of one of the types permitted in Table 5.2.5.1 based on the *structure*'s *Seismic Design Category*, structural system, dynamic properties, and regularity or, with the approval of the authority having jurisdiction, an alternative generally accepted procedure shall be permitted to be used.

5.2.5.2 Application of Loading: The directions of application of *seismic forces* used in the design shall be those that will produce the most critical load effects. It shall be permitted to satisfy this requirement using the procedures of Sec. 5.2.5.2.1 for *Seismic Design Category* A or B, Sec. 5.2.5.2.2 for *Seismic Design Category* C, and Sec. 5.2.5.2.3 for *Seismic Design Category* D, E, or F.

5.2.5.2.1 Seismic Design Category A or B: For *structures* assigned to *Seismic Design Category* A or B, the design seismic forces are permitted to be applied separately in each of two orthogonal directions and orthogonal interaction effects may be neglected.

TABLE 5.2.5.1 Permitted Analytical Procedures

Seismic Design Category	**Structural Characteristics**	**Index Force Analysis, Sec. 5.3**	**Equivalent Lateral Force Analysis, Sec. 5.4**	**Modal Response Spectrum Analysis, Sec. 5.5**	**Linear Response History Analysis, Sec. 5.6**	**Nonlinear Response History Analysis, Sec. 5.7**
A	Regular or irregular	P	P	P	P	P
B, C	Regular or irregular	NP	P	P	P	P
D, E, F	Regular *structures* with $T < 3.5T_s$ and all *structures* of light frame construction	NP	P	P	P	P
	Irregular *structures* with $T < 3.5T_s$ and having only plan irregularities Type 2, 3, 4, or 5 Table 5.2.3.2 or vertical irregularities Type 4 or 5 of Table 5.2.3.3.	NP	P	P	P	P
	Irregular *structures* with $T < 3.5T_s$ and having either plan irregularities Type 1a or 1b of Table 5.2.3.2 or vertical irregularities Type 1a or 1b, 2, or 3 of Table 5.2.3.3.	NP	NP	P	P	P
	All other structures	NP	NP	P	P	P

Notes: P indicates permitted; NP indicates not permitted.

5.2.5.2.2 Seismic Design Category C: Loading applied to *structures* assigned to *Seismic Design Category* C shall, as a minimum, conform to the requirements of Sec. 5.2.5.2.1 for *Seismic Design Categories* A and B and the requirements of this section. *Structures* that have plan structural irregularity Type 5 in Table 5.2.3.2 shall be analyzed for *seismic forces* using a three-dimensional representation and either of the following procedures:

a. The *structure* shall be analyzed using the equivalent lateral force analysis procedure of Sec. 5.4, the modal response spectrum analysis procedure of Sec. 5.5, or the linear response history analysis procedure of Sec. 5.6 as permitted under Sec. 5.2.5.1 with the loading applied independently in any two orthogonal directions. The most critical load effect due to direction of application of *seismic forces* on the *structure* may be assumed to be satisfied if *components* and their foundations are designed for the following combination of prescribed loads: 100 percent of the forces for one direction plus 30 percent of the forces for the perpendicular direction; the combination requiring the maximum *component strength* shall be used.

b. The *structure* shall be analyzed using the linear response history analysis procedure of Sec. 5.6 or the nonlinear response history analysis procedure of Sec. 5.7 as permitted by Sec. 5.2.5.1 with simultaneous application of ground motion in each of two orthogonal directions.

5.2.5.2.3 Seismic Design Category D, E, or F: *Structures* assigned to *Seismic Design Category* D, E, or F shall be designed for the most critical load effect due to application of *seismic forces* in any direction. Either of the procedures of Sec. 5.2.5.2.2 shall be permitted to be used to satisfy this requirement. Two-dimensional analysis shall be permitted to be used where diaphragms are flexible and the structure does not have plan structural irregularity Type 5 of Table 5.2.3.2.

5.2.6 Design and Detailing Requirements: The design and detailing of the *components* of the *seismic-force-resisting system* shall comply with the requirements of this section. Foundation design shall conform to the applicable requirements of Chapter 7. The materials and the systems composed of those materials shall conform to the requirements and limitations of Chapters 8 through 12 for the applicable category.

5.2.6.1 Seismic Design Category A: The design and detailing of *structures* assigned to *Seismic Design Category* A shall comply with the requirements of this section.

5.2.6.1.1 Connections: All parts of the *structure* between separation *joints* shall be inter-connected, and the connections shall be capable of transmitting the *seismic force*, F_p, induced by the parts being connected. Any smaller portion of the *structure* shall be tied to the remainder of the *structure* with elements having a *strength* of 0.133 times the short period design spectral response acceleration coefficient, S_{DS}, times the weight of the smaller portion or 5 percent of the portion's weight, whichever is greater.

A positive connection for resisting a horizontal force acting parallel to the member shall be provided for each beam, girder, or truss to its support. The connection shall have a minimum *strength* of 5 percent of the *dead load* and *live load* reaction.

5.2.6.1.2 Anchorage of Concrete or Masonry Walls: Concrete and masonry *walls* shall be anchored to the roof and all floors and to members that provide lateral support for the *wall* or which are supported by the *wall*. The anchorage shall provide a direct connection between the

walls and the roof or floor construction. The connections shall be capable of resisting a seismic lateral force, F_p, induced by the *wall* of 400 times the short period design spectral response acceleration coefficient, S_{DS}, in pounds per lineal ft (5840 times S_{DS} in N/m) of *wall* multiplied by the *occupancy importance factor, I*. *Walls* shall be designed to resist bending between anchors where the anchor spacing exceeds 4 ft (1.2 m).

5.2.6.2 Seismic Design Category B: *Structures* assigned to *Seismic Design Category* B shall conform to the requirements of Sec. 5.2.6.1 for *Seismic Design Category* A and the requirements of this section.

5.2.6.2.1 P-Delta Effects: *P-delta effects* shall be included as required by Sec. 5.4.6.2

5.2.6.2.2 Openings: Where openings occur in *shear walls*, *diaphragms* or other plate-type elements, reinforcement at the edges of the openings shall be designed to transfer the stresses into the structure. The edge reinforcement shall extend into the body of the *wall* or *diaphragm* a distance sufficient to develop the force in the reinforcement.

5.2.6.2.3 Discontinuities in Vertical System: *Structures* with a discontinuity in lateral capacity, vertical irregularity Type 5 as defined in Table 5.2.3.3, shall not be over 2 stories or 30 ft (9 m) in height where the "weak" *story* has a calculated *strength* of less than 65 percent of the strength of the *story* above.

> **Exception:** The height limitation shall not apply when the "weak" *story* is capable of resisting a total *seismic force* equal to 75 percent of the deflection amplification factor, C_d, times the design force prescribed in Sec. 5.3.

5.2.6.2.4 Nonredundant Systems: The design of a *structure* shall consider the potentially adverse effect that the failure of a single member, connection, or *component* of the *seismic-force-resisting system* would have on the stability of the *structure*.

5.2.6.2.5 Collector Elements: Collector elements shall be provided that are capable of transferring the *seismic forces* originating in other portions of the *structure* to the element providing the resistance to those forces.

5.2.6.2.6 Diaphragms: The deflection in the plane of the *diaphragm*, as determined by engineering analysis, shall not exceed the permissible deflection of the attached elements. Permissible deflection shall be a deflection that permits the attached element to maintain its structural integrity under the individual loading and to continue to support the prescribed loads.

Floor and roof *diaphragms* shall be designed to resist the following *seismic forces*: A minimum force equal to 20 percent of the short period design spectral response acceleration, S_{DS}, times the weight of the *diaphragm* and other elements of the *structure* attached thereto plus the portion of the seismic shear force at that level, V_x, required to be transferred to the *components* of the vertical *seismic-force-resisting system* because of offsets or changes in stiffness of the vertical *components* above and below the *diaphragm*.

Diaphragms shall provide for both the shear and bending stresses resulting from these forces. *Diaphragms* shall have ties or struts to distribute the *wall* anchorage forces into the *diaphragm*. *Diaphragm* connections shall be positive, mechanical, or welded type connections.

5.2.6.2.7 Bearing Walls: Exterior and interior *bearing walls* and their anchorage shall be designed for a force equal to 40 percent of the short period design spectral response acceleration, S_{DS}, times the weight of *wall*, W_c, normal to the surface, with a minimum force of 10 percent of the weight of the *wall*. Interconnection of *wall* elements and connections to supporting framing systems shall have sufficient ductility, rotational capacity, or *strength* to resist shrinkage, thermal changes, and differential foundation settlement when combined with *seismic forces*.

5.2.6.2.8 Inverted Pendulum-Type Structures: Supporting columns or piers of *inverted pendulum-type structures* shall be designed for the bending moment calculated at the *base* determined using the procedures given in Sec. 5.3 and varying uniformly to a moment at the top equal to one-half the calculated bending moment at the *base*.

5.2.6.2.9 Anchorage of Nonstructural Systems: When required by Chapter 6, all portions or *components* of the *structure* shall be anchored for the *seismic force*, F_p, prescribed therein.

5.2.6.2.10 Columns Supporting Discontinuous Walls or Frames: Columns supporting discontinuous *walls* or frames of *structures* having plan irregularity Type 4 of Table 5.2.3.2 or vertical irregularity Type 4 of Table 5.2.3.3 shall have the *design strength* to resist the maximum axial force that can develop in accordance with the special combination of loads of Sec. 5.2.7.1.

5.2.6.3 Seismic Design Category C: *Structures* assigned to *Seismic Design Category* C shall conform to the requirements of Sec. 5.2.6.2 for *Seismic Design Category* B and to the requirements of this section.

5.2.6.3.1 Collector Elements: Collector elements shall be provided that are capable of transferring the *seismic forces* originating in other portions of the *structure* to the element providing the resistance to those forces. Collector elements, splices, and their connections to resisting elements shall resist the of Sec. 5.2.7.1.

> **Exception:** In *structures* or portions thereof braced entirely by light frame *shear walls*, collector elements, splices, and connections to resisting elements are permitted to be designed to resist forces in accordance with Eq. 5.2.6.4.4.

The quantity $\Omega_0 E$ in Eq. 5.2.7.1-1 need not exceed the maximum force that can be transferred to the collector by the *diaphragm* and other elements of the lateral-force-resisting system.

5.2.6.3.2 Anchorage of Concrete or Masonry Walls: Concrete or masonry *walls* shall be anchored to all floors, roofs, and members that provide out-of-plane lateral support for the *wall* or that are supported by the *wall*. The anchorage shall provide a positive direct connection between the *wall* and the floor, roof, or supporting member capable of resisting the horizontal forces specified in this section for *structures* with flexible *diaphragms* or of Sec. 6.1.3 for *structures* with *diaphragms* that are not flexible.

Anchorage of *walls* to flexible *diaphragms* shall have the *strength* to develop the out-of-plane force given by Eq. 5.2.6.3.2:

$$F_p = 1.2 S_{DS} I W_p \qquad (5.2.6.3.2)$$

where:

F_p = the design force in the individual anchors,

S_{DS} = the design spectral response acceleration at short periods in accordance with Sec. 4.1.2.5,

I = the *occupancy importance factor* in accordance with Sec. 1.4, and

W_p = the weight of the *wall* tributary to the anchor.

Diaphragms shall be provided with continuous ties or struts between *diaphragm* chords to distribute these anchorage forces into the *diaphragms*. Added chords are permitted to be used to form *subdiaphragms* to transmit the anchorage forces to the main continuous cross-ties. The maximum length to width ratio of the structural *subdiaphragm* shall be 2-1/2 to 1. Connections and anchorages capable of resisting the prescribed forces shall be provided between the *diaphragm* and the attached *components*. Connections shall extend into the *diaphragm* a sufficient distance to develop the force transferred into the *diaphragm*.

In wood *diaphragms*, the continuous ties shall be in addition to the diaphragm sheathing. Anchorage shall not be accomplished by use of toe nails or nails subject to withdrawal nor shall wood ledgers of framing be used in cross-grain bending or cross-grain tension. The *diaphragm* sheathing shall not be considered as effectively providing the ties or struts required by this section.

In metal deck *diaphragms*, the metal deck shall not be used as the continuous ties required by this section in the direction perpendicular to the deck span.

Diaphragm-to-*wall* anchorage using embedded straps shall be attached to or hooked around the reinforcing steel or otherwise terminated so as to effectively transfer forces to the reinforcing steel.

5.2.6.4 Seismic Design Category D: *Structures* assigned to *Seismic Design Category* D shall conform to the requirements of Sec. 5.2.6.3 for *Seismic Design Category* C and to the requirements of this section.

5.2.6.4.1 Collector Elements: Collector elements shall be provided that are capable of transferring the *seismic forces* originating in other portions of the *structure* to the element providing the resistance to those forces. Collector elements, splices, and their connections to resisting elements shall resist the forces determined in accordance with Eq. 5.2.6.4.4. In addition, collector elements, splices, and their connections to resisting elements shall have the *design strength* to resist the earthquake loads defined in the special load combination of Sec. 5.2.7.1.

> **Exception:** In *structures* or portions thereof braced entirely by light *shear walls*, collector elements, splices, and connections to resisting elements are permitted to be designed to resist forces in accordance with Eq. 5.2.5.4.

The quantity $\Omega_0 E$ in Eq. 5.2.7.1-1 need not exceed the maximum force that can be transferred to the collector by the *diaphragm* and other elements of the lateral-force-resisting system.

5.2.6.4.2 Plan or Vertical Irregularities: The design shall consider the potential for adverse effects when the ratio of the *strength* provided in any *story* to the *strength* required is significantly less than that ratio for the *story* immediately above and the *strengths* shall be adjusted to compensate for this effect.

For *structures* having a plan structural irregularity of Type 1a, 1b, 2, 3, or 4 in Table 5.2.3.2 or a vertical structural irregularity of Type 4 in Table 5.2.3.3, the design forces determined from Sec. 5.4.1 shall be increased 25 percent for connections of *diaphragms* to vertical elements and to collectors and for connections of collectors to the vertical elements. Collectors also shall be designed for these increased forces unless subject to the requirements of Sec. 5.2.6.4.1 or Sec. 8.6.2.

5.2.6.4.3 Vertical Seismic Forces: The vertical *component* of earthquake ground motion shall be considered in the design of horizontal cantilever and horizontal prestressed *components*. The load combinations used in evaluating such *components* shall include E as defined by Eq. 5.2.7-1 and 5.2.7-2. Horizontal cantilever structural *components* shall be designed for a minimum net upward force of 0.2 times the *dead load* in addition to the applicable load combinations of Sec. 5.2.7.

5.2.6.4.4 Diaphragms: *Diaphragms* shall be designed to resist design *seismic forces* determined in accordance with Eq. 5.2.6.4.4 as follows:

$$F_{px} = \frac{\sum_{i=x}^{n} F_i}{\sum_{i=x}^{n} w_i} w_{px} \qquad (5.2.6.4.4)$$

where:

F_{px} = the *diaphragm* design force,

F_i = the design force applied to Level i,

w_i = the weight tributary to Level I, and

w_{px} = the weight tributary to the *diaphragm* at Level x.

The force determined from Eq. 5.2.6.4.4 need not exceed $0.4S_{DS}Iw_{px}$ but shall not be less than $0.2S_{DS}Iw_{px}$. When the *diaphragm* is required to transfer design *seismic forces* from the vertical-resisting elements above the *diaphragm* to other vertical-resisting elements below the *diaphragm* due to offsets in the placement of the elements or to changes in relative lateral stiffness in the vertical elements, these forces shall be added to those determined from Eq. 5.2.6.4.4.

5.2.6.5 Seismic Design Categories E and F: *Structures* assigned to *Seismic Design Categories* E and F shall conform to the requirements of Sec. 5.2.6.4 for *Seismic Design Category* D and to the requirements of this section.

5.2.6.5.1 Plan or Vertical Irregularities: *Structures* having plan irregularity Type 1b of Table 5.2.3.2 or vertical irregularities Type 1b or 5 of Table 5.2.3.3 shall not be permitted.

5.2.7 Combination of Load Effects: The effects on the *structure* and its *components* due to *gravity loads* and *seismic forces* shall be combined in accordance with the factored load combinations as presented in ASCE7- 98 except that the effect of seismic loads, *E*, shall be as defined herein.

The effect of seismic load *E* shall be defined by Eq. 5.2.7-1 as follows for load combinations in which the effects of *gravity loads* and seismic loads are additive:

$$E = \rho Q_E + 0.2 S_{DS} D \qquad (5.2.7\text{-}1)$$

where:

E	=	the effect of horizontal and vertical earthquake-induced forces,
S_{DS}	=	the design spectral response acceleration at short periods obtained from Sec. 4.1.2.5.
D	=	the effect of dead load,
ρ	=	the reliability factor, and
Q_E	=	the effect of horizontal *seismic forces*.

The effect of seismic load *E* shall be defined by Eq. 5.2.7-2 as follows for load combinations in which the effects of gravity counteract seismic load:

$$E = \rho Q_E - 0.2 S_{DS} D \qquad (5.2.7\text{-}2)$$

where E, ρ, Q_E, S_{DS}, and D are as defined above.

5.2.7.1 Special Combination of Loads: When specifically required by the *Provisions*, the design *seismic force* on *components* sensitive to the effects of structural overstrength shall be as defined by Eq. 5.2.7.1-1 and 5.2.7.1-2 when seismic load is, respectively, additive or counteractive to the gravity forces as follows:

$$E = \Omega_0 Q_E + 0.2 S_{DS} D \qquad (5.2.7.1\text{-}1)$$

$$E = \Omega_0 Q_E - 0.2 S_{DS} D \qquad (5.2.7.1\text{-}2)$$

where E, Q_E, S_{DS}, and D are as defined above and Ω_0 is the system overstrength factor as given in Table 5.2.2. The term $\Omega_0 Q_E$ calculated in accordance with Eq. 5.2.7.1-1 and 5.2.7.1-2 need not exceed the maximum force that can develop in the element as determined by a rational plastic mechanism analysis or nonlinear response analysis utilizing realistic expected values of material *strengths*.

Exception: The special load combination of Eq. 5.2.7.1-1 need not apply to the design of *components* in *structures* in *Seismic Design Category* A.

5.2.8 Deflection and Drift Limits: The design *story* drift, Δ, as determined in Sec. 5.3.7 or 5.4.6 shall not exceed the allowable *story* drift, Δ_a, as obtained from Table 5.2.8 for any *story*. For *structures* with significant torsional deflections, the maximum drift shall include torsional effects. All portions of the *structure* shall be designed and constructed to act as an integral unit in resisting *seismic forces* unless separated structurally by a distance sufficient to avoid damaging contact under total deflection, δ_x, as determined in Sec. 5.3.7.1.

TABLE 5.2.8 Allowable Story Drift, Δ_a [a] (in. or mm)

Structure	Seismic Use Group		
	I	II	III
Structures, other than masonry *shear wall* or masonry *wall* frame *structures*, four stories or less in height with interior *walls*, *partitions*, ceilings, and exterior *wall* systems that have been designed to accommodate the *story* drifts	0.025 h_{sx} [b]	0.020 h_{sx}	0.015 h_{sx}
Masonry cantilever *shear wall structures* [c]	0.010 h_{sx}	0.010 h_{sx}	0.010 h_{sx}
Other masonry *shear wall structures*	0.007 h_{sx}	0.007 h_{sx}	0.007 h_{sx}
Masonry *wall* frame *structures*	0.013 h_{sx}	0.013 h_{sx}	0.010 h_{sx}
All other *structures*	0.020 h_{sx}	0.015 h_{sx}	0.010 h_{sx}

[a] h_{sx} is the *story* height below Level x.

[b] There shall be no drift limit for single-*story structures* with interior *walls*, *partitions*, ceilings, and exterior *wall* systems that have been designed to accommodate the *story* drifts.

[c] *Structures* in which the basic structural system consists of masonry *shear walls* designed as vertical elements cantilevered from their *base* or foundation support which are so constructed that moment transfer between *shear walls* (coupling) is negligible.

5.3 INDEX FORCE ANALYSIS PROCEDURE: An index force analysis shall consist of the application of static lateral index forces to a linear mathematical model of the *structure* independently in each of two orthogonal directions. For purposes of analysis, the *structure* shall be considered to be fixed at the base. The lateral index forces shall be as given by Eq. 5.3 and shall be applied simultaneously at each floor level:

$$F_x = 0.01 w_x \tag{5.3}$$

where:

F_x = the design lateral force applied at *Story x*,

w_x = the portion of the total gravity load of the *structure*, *W*, located or assigned to Level *x*, and

W = the total *dead load* and applicable portions of other loads listed below:

1. In areas used for storage, a minimum of 25 percent of the floor *live load* shall be applicable. Floor *live load* in public garages and open parking *structures* is not applicable.
2. Where an allowance for *partition* load is included in the floor load design, the actual *partition* weight or a minimum weight of 10 psf (500 Pa/m^2) of floor area, whichever is greater, shall be applicable.
3. Total operating weight of permanent equipment.
4. In areas where the design flat roof snow load does not exceed 30 pounds per square ft, the effective snow load is permitted to be taken as zero. In areas where the design snow load is greater than 30 pounds per square ft and where siting and load duration conditions warrant and when approved by the authority having jurisdiction, the effective snow load is permitted to be reduced to not less than 20 percent of the design snow load.

5.4 EQUIVALENT LATERAL FORCE PROCEDURE: An equivalent lateral force analysis shall consist of the application of equivalent static lateral forces to a linear mathematical model of the *structure*. The directions of application of lateral forces shall be as indicated in Sec. 5.2.5.2. The lateral forces applied in each direction shall sum to a total seismic base shear given by Sec. 5.4.1 and shall be distributed vertically in accordance with Sec. 5.4.3. For purposes of analysis, the *structure* shall be considered fixed at the *base*.

5.4.1 Seismic Base Shear: The seismic *base shear*, *V*, in a given direction shall be determined in accordance with the following equation:

$$V = C_s W \tag{5.4.1}$$

where:

C_s = the *seismic response coefficient* determined in accordance with Sec. 5.4.1.1 and

W = the total *dead load* and applicable portions of other loads as defined in Sec. 5.3.

5.4.1.1 Calculation of Seismic Response Coefficient: The *seismic response coefficient*, C_s, shall be determined in accordance with the following equation:

$$C_s = \frac{S_{DS}}{R/I} \qquad (5.4.1.1\text{-}1)$$

where:

S_{DS} = the design spectral response acceleration in the short period range as determined from Sec. 4.1.2.5,

R = the response modification factor from Table 5.2.2, and

I = the *occupancy importance factor* determined in accordance with Sec. 1.4.

The value of the *seismic response coefficient* computed in accordance with Eq. 5.4.1.1-1 need not exceed the following:

$$C_s = \frac{S_{D1}}{T(R/I)} \qquad (5.4.1.1\text{-}2)$$

where I and R are as defined above and

S_{D1} = the design spectral response acceleration at a period of 1.0 second as determined from Sec. 4.1.2.5,

T = the fundamental period of the *structure* (sec) determined in Sec. 5.4.2, and

S_1 = the mapped *maximum considered earthquake* spectral response acceleration determined in accordance with Sec. 4.1.

C_s shall not be taken less than:

$$C_s = 0.044 I S_{DS} \qquad (5.4.1.1\text{-}3)$$

For *structures* in *Seismic Design Categories* E and F, the value of the seismic response coefficient, C_s, shall not be taken less than:

$$C_s = \frac{0.5 S_1}{R/I} \qquad (5.4.1.1\text{-}4)$$

For regular *structures* 5 *stories* or less in height and having a period, T, of 0.5 seconds or less, the *seismic response coefficient*, C_s, shall be permitted to be calculated using values of 1.5 and 0.6,

respectively, for the mapped *maximum considered earthquake* spectral response accelerations, S_S and S_1.

A soil-*structure* interaction reduction is permitted when determined using Sec. 5.8 or other generally accepted procedures approved by the authority having jurisdiction.

5.4.2 Period Determination: The fundamental period of the *building*, T, in the direction under consideration shall be established using the structural properties and deformational characteristics of the resisting elements in a properly substantiated analysis. The fundamental period, T, so calculated, shall not exceed the product of the coefficient for the upper limit on calculated period, C_u, from Table 5.4.2 and the approximate fundamental period, T_a, calculated in accordance with Sec. 5.4.2.1. The approximate period formulae of Sec. 5.4.2.1 is permitted to be used directly as an alternative to performing an analysis to determine the fundamental period of the *building*, T.

TABLE 5.4.2 Coefficient for Upper Limit on Calculated Period

Design Spectral Response Acceleration at 1 Second, S_{D1}	**Coefficient C_u**
Greater than or equal to 0.4	1.4
0.3	1.4
0.2	1.5
0.15	1.6
0.1	1.7
Less than or equal to 0.05	1.7

5.4.2.1 Approximate Fundamental Period: The approximate fundamental period, T_a, in seconds, shall be determined from the following equation:

$$T_a = C_r h_n^x \qquad (5.4.2.1\text{-}1)$$

where h_n is the height (ft or m) above the *base* to the highest level of the *structure* and the values of C_r and x shall be determined from Table 5.4.2.1.

TABLE 5.4.2.1 Values of Approximate Period Parameters C_r and x

Structure Type	C_{OT}	x
Moment resisting frame systems of steel in which the frames resist 100 percent of the required *seismic force* and are not enclosed or adjoined by more rigid *components* that will prevent the frames from deflecting when subjected to *seismic forces*.	0.028 (metric 0.0724)	0.8
Moment resisting frame systems of *reinforced concrete* in which the frames resist 100 percent of the required *seismic force* and are not enclosed or adjoined by more rigid *components* that will prevent the frames from deflecting when subjected to *seismic forces*.	0.016 (metric 0.0466)	0.9
Eccentrically braced steel frames	0.03 (metric 0.0731)	0.75
All other structural systems	0.02 (metric 0.0488)	0.75

Alternatively, the approximate fundamental period, T_a, in seconds, is permitted to be determined from the following equation for concrete and steel moment resisting frame *structures* not exceeding 12 *stories* in height and having a minimum *story* height of 10 ft (3 m):

$$T_a = 0.1N \qquad (5.4.2.1\text{-}2)$$

where N = number of stories.

The approximate fundamental period, T_a, in seconds, for masonry or concrete shear wall *structures* is permitted to be determined from the following equation:

$$T_a = \frac{0.0019}{\sqrt{C_w}} h_n \quad T_a = \frac{0.0062}{\sqrt{C_W}} h_n \qquad (5.4.2.1\text{-}3)$$

where C_w is a coefficient related to the effective shear wall area and h_n is as defined above. The coefficient C_w shall be calculated from the following equation:

$$C_w = \frac{100}{A_B} \sum_{i=1}^{n} \left(\frac{h_n}{h_i} \right) \frac{A_i}{\left[1 + 0.83 \left(\frac{h_n}{D} \right)^2 \right]} \qquad (5.4.2.1\text{-}4)$$

where:

A_B = the base area of the structure (ft^2. or m^2),

A_i = the area of shear wall *i* (ft^2. or m^2),

D_i = the length of shear wall *i* (ft or m),

h_i = the height of shear wall *i* (ft or m), and

n = the number of shear walls in the building effective in resisting lateral forces in the direction under consideration.

5.4.3 Vertical Distribution of Seismic Forces: The lateral force, F_x (kip or kN), induced at any level shall be determined from the following equations:

$$F_x = C_{vx} V \qquad (5.4.3\text{-}1)$$

and

$$C_{vx} = \frac{w_x h_x^k}{\sum_{i=1}^{n} w_i h_i^k} \qquad (5.4.3\text{-}2)$$

where:

C_{vx} = vertical distribution factor,

V = total design lateral force or shear at the *base* of the *structure* (kip or kN),

w_i and w_x = the portion of the total *gravity load* of the *structure*, *W*, located or assigned to Level *i* or *x*,

h_i and h_x = the height (ft or m) from the *base* to Level *i* or *x*, and

k = an exponent related to the *structure* period as follows:

For *structures* having a period of 0.5 seconds or less, $k = 1$

For *structures* having a period of 2.5 seconds or more, $k = 2$

For *structures* having a period between 0.5 and 2.5 seconds, *k* shall be 2 or shall be determined by linear interpolation between 1 and 2

5.4.4 Horizontal Shear Distribution: The seismic design *story shear* in any *story*, V_x (kip or kN), shall be determined from the following equation:

$$V_x = \sum_{i=x}^{n} F_i \qquad (5.4.4)$$

where F_i = the portion of the seismic *base shear*, V (kip or kN), induced at Level i.

The seismic design *story shear*, V_x (kip or kN), shall be distributed to the various vertical elements of the *seismic-force-resisting system* in the *story* under consideration based on the relative lateral stiffnesses of the vertical-resisting elements and the *diaphragm*.

5.4.4.1 Inherent Torsion: The distribution of lateral forces at each level shall consider the effect of the inherent torsional moment, M_t (kip·ft or kN·m), resulting from eccentric location of the masses.

5.4.4.2. Accidental Torsion: In addition to the inherent torsional moment, the distribution of lateral forces also shall include accidental torsional moments, M_{ta} (kip·ft or kN·m), caused by an assumed *displacement* of the mass each way from its actual location by a distance equal to 5 percent of the dimension of the *structure* perpendicular to the direction of the applied forces.

5.4.4.3 Dynamic Amplification of Torsion: For *structures* of *Seismic Design Categories* C, D, E and F where Type 1a or 1b torsional irregularity exists as defined in Table 5.2.3.1, the effects of torsional irregularity shall be accounted for by multiplying the sum of M_t plus M_{ta} at each level by a torsional amplification factor, A_x, determined from the following equation:

$$A_x = \left(\frac{\delta_{max}}{1.2\,\delta_{avg}} \right)^2 \qquad (5.4.4.3\text{-}1)$$

where:

δ_{max} = the maximum *displacement* at Level x (in. or mm) and

δ_{avg} = the average of the *displacements* at the extreme points of the *structure* at Level x (in. or mm).

The torsional amplification factor, A_x, is not required to exceed 3.0. The more severe loading for each element shall be considered for design.

5.4.5 Overturning: The *structure* shall be designed to resist overturning effects caused by the *seismic forces* determined in Sec. 5.3.4. At any *story*, the increment of overturning moment in the *story* under consideration shall be distributed to the various vertica- force-resisting elements in the same proportion as the distribution of the horizontal shears to those elements.

The overturning moments at Level x, M_x (kip·ft or kN·m), shall be determined from the following equation:

$$M_x = \sum_{i=x}^{n} F_i (h_i - h_x) \qquad (5.4.5)$$

where:

F_i = the portion of the seismic *base shear*, V, induced at Level i and

h_i and h_x = the height (ft or m) from the *base* to Level i or x,

The foundations of *structures*, except *inverted pendulum-type structures*, shall be permitted to be designed for three-fourths of the foundation overturning design moment, M_f (kip·ft or kN·m), determined using Eq. 5.4.5 at the foundation-soil interface.

5.4.6 Drift Determination and *P*-Delta Effects: *Story* drifts and, where required, member forces and moments due to *P-delta effects* shall be determined in accordance with this section. Determination of *story* drifts shall be based on the application of the design *seismic forces* to a mathematical model of the physical *structure*. The model shall include the stiffness and *strength* of all elements that are significant to the distribution of forces and *deformations* in the *structure* and shall represent the spatial distribution of the mass and stiffness of the *structure*. In addition, the model shall comply with the following:

1. Stiffness properties of *reinforced concrete* and masonry elements shall consider the effects of cracked sections and
2. For steel *moment resisting frame* systems, the contribution of panel zone *deformations* to overall *story* drift shall be included.

5.4.6.1 Story Drift Determination: The design *story* drift, Δ, shall be computed as the difference of the deflections at the center of mass at the top and bottom of the *story* under consideration.

> **Exception:** For *structures* of *Seismic Design Categories* C, D, E and F having plan irregularity Type 1a or 1b of Table 5.4.3.2-2, the design *story* drift, Δ, shall be computed as the largest difference of the deflections along any of the edges of the *structure* at the top and bottom of the *story* under consideration.

The deflections of Level x, δ_x (in. or mm), shall be determined in accordance with following equation:

$$\delta_x = \frac{C_d \delta_{xe}}{I} \qquad (5.4.6.1)$$

where:

C_d = the deflection amplification factor in Table 5.2.2,

δ_{xe} = the deflections determined by an elastic analysis (in. or mm), and

I = the *occupancy importance factor* determined in accordance with Sec. 1.4.

The elastic analysis of the *seismic-force-resisting system* shall be made using the prescribed seismic design forces of Sec. 5.4.3. For the purpose of this section, the value of the base shear, V, used in Eq. 5.3.2 need not be limited by the value obtained from Eq. 5.3.2.1-3.

For determining compliance with the *story* drift limitation of Sec. 5.2.8, the deflections of Level x, δ_x (in. or mm), shall be calculated as required in this section. For purposes of this drift analysis only, it is permissible to use the computed fundamental period, T (secs), of the *structure* without the upper bound limitation specified in Sec. 5.4.2 when determining drift level seismic design forces.

Where applicable, the design *story* drift, Δ (in. or mm), shall be increased by the incremental factor relating to the *P-delta effects* as determined in Sec. 5.4.6.2.

5.4.6.2 *P*-Delta Effects: *P-delta effects* on *story shears* and moments, the resulting member forces and moments, and the *story* drifts induced by these effects are not required to be considered when the stability coefficient, θ, as determined by the following equation is equal to or less than 0.10:

$$\theta = \frac{P_x \Delta}{V_x h_{sx} C_d} \qquad (5.4.6.2\text{-}1)$$

where:

P_x = the total vertical design load at and above Level x (kip or kN). When calculating the vertical design load for purposes of determining *P*-delta, the individual load factors need not exceed 1.0.

Δ = the design *story* drift occurring simultaneously with V_x (in. or mm).

V_x = the seismic shear force acting between Level x and x - 1 (kip or kN).

h_{sx} = the *story* height below Level x (in. or mm).

C_d = the deflection amplification factor in Table 5.2.2.

The stability coefficient, θ, shall not exceed θ_{max} determined as follows:

$$\theta_{max} = \frac{0.5}{\beta C_d} \leq 0.25 \qquad (5.4.6.2\text{-}2)$$

where β is the ratio of shear demand to shear capacity for the *story* between Levels x and x - 1. This ratio is permitted to be conservatively taken as 1.0.

When the stability coefficient, θ, is greater than 0.10 but less than or equal to θ_{max}, the incremental factor related to *P-delta effects*, a_d, shall be determined by rational analysis (see Part 2, *Commentary*). To obtain the *story* drift for including the *P-delta effects*, the design *story* drift determined in Sec. 5.4.6.1 shall be permitted to be multiplied by 1.0/(1 - θ).

When θ is greater than θ_{max}, the *structure* is potentially unstable and shall be redesigned.

5.5 MODAL RESPONSE SPECTRUM ANALYSIS PROCEDURE: A modal response spectrum analysis shall consist of the analysis of a linear mathematical model of the *structure* to

determine the maximum accelerations, forces, and displacements resulting from the dynamic response to ground shaking represented by the design response spectrum. The analysis shall be performed in accordance with the requirements of this section. For purposes of analysis, the *structure* shall be permitted to be considered to be fixed at the *base* or, alternatively, it shall be permitted to use realistic assumptions with regard to the stiffness of foundations. The symbols used in this section have the same meaning as those for similar terms used in Sec. 5.4 but with the subscript m denoting quantities relating to the mth mode.

5.5.1 Modeling: A mathematical model of the *structure* shall be constructed that represents the spatial distribution of mass and stiffness throughout the *structure*. For regular *structures* with independent orthogonal *seismic-force-resisting systems*, independent two-dimensional models are permitted to be constructed to represent each system. For irregular *structures* or *structures* without independent orthogonal systems, a three-dimensional model incorporating a minimum of three dynamic degrees of freedom consisting of translation in two orthogonal plan directions and torsional rotation about the vertical axis shall be included at each level of the *structure*. Where the *diaphragms* are not rigid compared to the vertical elements of the lateral-force-resisting system, the model should include representation of the diaphragm's flexibility and such additional dynamic degrees of freedom as are required to account for the participation of the *diaphragm* in the *structure's* dynamic response. In addition, the model shall comply with the following:

1. Stiffness properties of concrete and masonry elements shall consider the effects of cracked sections and
2. The contribution of panel zone *deformations* to overall *story* drift shall be included for steel moment frame resisting systems.

5.5.2 Modes: An analysis shall be conducted to determine the natural modes of vibration for the *structure* including the period of each mode, the modal shape vector ϕ, the modal participation factor, and modal mass. The analysis shall include a sufficient number of modes to obtain a combined modal mass participation of at least 90 percent of the actual mass in each of two orthogonal directions.

5.5.3 Modal Properties: The required periods, mode shapes, and participation factors of the *structure* shall be calculated by established methods of structural analysis for the fixed-*base* condition using the masses and elastic stiffnesses of the *seismic-force-resisting system*.

5.5.4 Modal Base Shear: The portion of the *base shear* contributed by the mth mode, V_m, shall be determined from the following equations:

$$V_m = C_{sm}\overline{W_m} \qquad (5.5.4\text{-}1)$$

$$\overline{W_m} = \frac{\left(\sum_{i=1}^{n} w_i \phi_{im}\right)^2}{\sum_{i=1}^{n} w_i \phi_{im}^2} \qquad (5.5.4\text{-}2)$$

where:

C_{sm} = the modal *seismic response coefficient* as determined by Eq. 5.5.4-3,

$\overline{W}_m$ = the effective modal *gravity load* including portions of the *live load* as defined in Sec. 5.3,

w_i = the portion of the total *gravity load* of the *structure* at Level *i*, and

ϕ_{im} = the *displacement* amplitude at the ith level of the *structure* when vibrating in its mth mode.

The modal *seismic response coefficient*, C_{sm}, shall be determined in accordance with the following equation:

$$C_{sm} = \frac{S_{am}}{R/I} \qquad (5.5.4\text{-}3)$$

where:

S_{am} = The design spectral response acceleration at period T_m determined from either the general design response spectrum of Sec. 4.1.2.5 or a site-specific response spectrum determined in accordance with Sec. 4.1.3,

R = the response modification factor determined from Table 5.2.2,

I = the *occupancy importance factor* determined in accordance with Sec. 1.4, and

T_m = the modal period of vibration (in seconds) of the mth mode of the *structure*.

Exceptions:

1. When the general design response spectrum of Sec. 4.1.2.6 is used for *structures* on *Site Class* D, E or F soils, the modal seismic design coefficient, C_{sm}, for modes other than the fundamental mode that have periods less than 0.3 seconds is permitted to be determined by the following equation:

   where S_{DS} is as defined in Sec. 4.1.2.5 and R, I, and T_m are as defined above.

$$C_{sm} = \frac{0.4 S_{DS}}{(R/I)}(1.0 + 5.0 T_m) \qquad (5.5.4\text{-}4)$$

2. When the general design response spectrum of Sec. 4.1.2.6 is used for *structures* where any modal period of vibration, T_m, exceeds 4.0 seconds, the modal seismic design coefficient, C_{sm}, for that mode is permitted to be determined by the following equation:

$$C_{sm} = \frac{4S_{D1}}{(R/I)T_m^2} \qquad (5.5.4\text{-}5)$$

where R, I, and T_m are as defined above and and S_{D1} is the design spectral response acceleration at a period of 1 second as determined in Sec. 4.1.2.5.

The reduction due to soil-*structure* interaction as determined in Sec. 5.8.3 shall be permitted to be used.

5.5.5 Modal Forces, Deflections, and Drifts: The modal force, F_{xm}, at each level shall be determined by the following equations:

$$F_{xm} = C_{vxm} V_m \qquad (5.5.5\text{-}1)$$

and

$$C_{vxm} = \frac{w_x \phi_{xm}}{\sum_{i=1}^{n} w_i \phi_{im}} \qquad (5.5.5\text{-}2)$$

where:

C_{vxm}	=	the vertical distribution factor in the mth mode,
V_m	=	the total design lateral force or shear at the *base* in the mth mode,
w_i, w_x	=	the portion of the total *gravity load*, W, located or assigned to Level i or x,
ϕ_{xm}	=	the *displacement* amplitude at the xth level of the *structure* when vibrating in its mth mode, and
ϕ_{im}	=	the *displacement* amplitude at the ith level of the *structure* when vibrating in its mth mode.

The modal deflection at each level, δ_{xm}, shall be determined by the following equations:

$$\delta_{xm} = \frac{C_d \delta_{xem}}{I} \qquad (5.5.5\text{-}3)$$

and

$$\delta_{xem} = \left(\frac{g}{4\pi^2}\right)\left(\frac{T_m^2 F_{xm}}{w_x}\right) \qquad (5.5.5\text{-}4)$$

where:

C_d	=	the deflection amplification factor determined from Table 5.2.2,
δ_{xem}	=	the deflection of Level x in the mth mode at the center of the mass at Level x determined by an elastic analysis,
g	=	the acceleration due to gravity (ft/s^2 or m/s^2),
I	=	the *occupancy importance factor* determined in accordance with Sec. 1.4,
T_m	=	the modal period of vibration, in seconds, of the mth mode of the *structure*,
F_{xm}	=	the portion of the seismic *base shear* in the mth mode, induced at Level x, and
w_x	=	the portion of the total *gravity load* of the *structure*, W, located or assigned to Level x.

The modal drift in a *story*, Δ_m, shall be computed as the difference of the deflections, δ_{xm}, at the top and bottom of the *story* under consideration.

5.5.6 Modal Story Shears and Moments: The *story shears*, *story* overturning moments, and the shear forces and overturning moments in vertical elements of the structural system at each level due to the *seismic forces* determined from the appropriate equation in Sec. 5.5.5 shall be computed for each mode by linear static methods.

5.5.7 Design Values: The design value for the modal *base shear*, V_t; each of the *story shear*, moment, and drift quantities; and the deflection at each level shall be determined by combining their modal values as obtained from Sec. 5.5.5 and 5.5.6. The combination shall be carried out by taking the square root of the sum of the squares of each of the modal values or by the complete quadratic combination technique. The complete quadratic combination shall be used where closely spaced periods in the translational and torsional modes will result in cross-correlation of the modes.

A *base shear*, V, shall be calculated using the equivalent lateral force procedure in Sec. 5.4. For the purpose of this calculation, the fundamental period of the *structure*, T (sec), shall not exceed the coefficient for upper limit on the calculated period, C_u, times the approximate fundamental period of the *structure*, T_a. Where the design value for the modal *base shear*, V_t, is less than 85 percent of the calculated *base shear*, V, using the equivalent lateral force procedure, the design *story shears*, moments, drifts, and floor deflections shall be multiplied by the following modification factor:

$$0.85\frac{V}{V_t} \qquad (5.5.7.1)$$

where:

V = the equivalent lateral force procedure *base shear* calculated in accordance with Sec. 5.4 and

V_t = the modal *base shear* calculated in accordance with this section.

Where soil-*structure* interaction in accordance with Sec. 5.8 is considered, the reduced value of V calculated in accordance with that section may be used for V in Eq. 5.5.7.1.

5.5.8 Horizontal Shear Distribution: The horizontal distribution of shear shall be in accordance with the requirements of Sec. 5.4.4 except that amplification of torsion per Sec. 5.4.4.1.3 is not required for that portion of the torsion included in the dynamic analysis model.

5.5.9 Foundation Overturning: The foundation overturning moment at the foundation-soil interface shall be permitted to be reduced by 10 percent.

5.5.10 P-Delta Effects: The *P-delta effects* shall be determined in accordance with Sec. 5.4.6. The *story* drifts and *story shears* shall be determined in accordance with Sec. 5.4.6.1.

5.6 LINEAR RESPONSE HISTORY ANALYSIS PROCEDURE: A linear response history analysis shall consist of an analysis of a linear mathematical model of the *structure* to determine its response, through methods of numerical integration, to suites of ground motion acceleration histories compatible with the design response spectrum for the site. The analysis shall be performed in accordance with the provisions of this section. For the purposes of analysis, the *structure* shall be permitted to be considered to be fixed at the *base* or, alternatively, it shall be permitted to use realistic assumptions with regard to the stiffness of foundations.

5.6.1 Modeling: Mathematical models shall conform to the requirements of Sec. 5.5.1.

5.6.2 Ground Motion: A suite of not less than three appropriate ground motions shall be used in the analysis. Ground motion shall conform to the requirements of this section.

5.6.2.1 Two-Dimensional Analysis: When two-dimensional analyses are performed, each ground motion shall consist of a horizontal acceleration history selected from an actual recorded event. Appropriate acceleration histories shall be obtained from records of events having magnitudes, fault distances, and source mechanisms that are consistent with those that control the *maximum considered earthquake*. Where the required number of appropriate recorded ground motion records are not available, appropriate simulated ground motion records shall be used to make up the total number required. The ground motions shall be scaled such that the average value of the 5 percent damped response spectra for the suite of motions is not less than the design response spectrum for the site determined in accordance with Sec. 4.1.3 for periods ranging from $0.2T$ to $1.5T$ seconds where T is the natural period of the *structure* in the fundamental mode for the direction of response being analyzed.

5.6.2.2 Three-Dimensional Analysis: When three-dimensional analysis is performed, ground motions shall consist of pairs of appropriate horizontal ground motion acceleration components that shall be selected and scaled from individual recorded events. Appropriate ground motions shall be selected from events having magnitudes, fault distances, and source mechanisms that are consistent with those that control the *maximum considered earthquake*. Where the required

number of recorded ground motion pairs are not available, appropriate simulated ground motion pairs shall be used to make up the total number required. For each pair of horizontal ground motion components, the square root of the sum of the squares (SRSS) of the 5 percent damped response spectrum of the scaled horizontal components shall be constructed. Each pair of motions shall be scaled such that the average value of the SRSS spectra from all horizontal component pairs is not less than 1.3 times the 5 percent damped design response spectrum determined in accordance with Sec. 4.1.3 for periods ranging from $0.2T$ to $1.5T$ seconds where T is the natural period of the fundamental mode of the *structure*.

5.6.3 Response Parameters: For each ground motion analyzed, the individual response parameters shall be scaled by the quantity I/R where I is the occupancy importance factor determined in accordance with Sec. 1.4 and R is the response modification coefficient selected in accordance with Sec. 5.2.2. The maximum value of the base shear, V_j, member forces, Q_{Ej}, and the interstory drifts, δ_{ij}, at each *story* scaled as indicated above shall be determined. When the maximum scaled base shear predicted by the analysis, V_j, is less than given by Eq. 5.4.1.1-3 or, in *Seismic Design Categories* E and F, Eq. 5.4.1.1-4, the scaled member forces, Q_{Ej}, shall be additionally scaled by the factor V/V_j where V is the minimum base shear determined in accordance with Eq. 5.4.1.1-3 or, for *structures* in Seismic Design Category E or F, Eq. 5.4.1.1-4.

If at least seven ground motions are analyzed, the design member forces, Q_E, used in the load combinations of Sec. 5.2.7 and the design interstory drift, Δ, used in the evaluation of drift in accordance with Sec. 5.2.8 shall be permitted to be taken, respectively, as the average of the scaled Q_{Ej} and δ_{ij} values determined from the analyses and scaled as indicated above. If less than seven ground motions are analyzed, the design member forces, Q_E, and the design interstory drift, Δ, shall be taken as the maximum value of the scaled Q_{Ej} *and* δ_{ij} values determined from the analyses.

Where the *Provisions* require the consideration of the special load combinations of Sec. 5.2.7.1, the value of $\Omega_0 Q_E$ need not be taken larger than the maximum of the unscaled value, Q_{Ej}, obtained from the suite of analyses.

5.7 NONLINEAR RESPONSE HISTORY ANALYSIS PROCEDURE : A nonlinear response history analysis shall consist of an analysis of a mathematical model of the *structure* that directly accounts for the nonlinear hysteretic behavior of the structure's *components* to determine its response, through methods of numerical integration, to suites of ground motion acceleration histories compatible with the design response spectrum for the site. The analysis shall be performed in accordance with the requirements of this section.

5.7.1 Modeling: A mathematical model of the *structure* shall be constructed that represents the spatial distribution of mass throughout the *structure*. The hysteretic behavior of elements shall be modeled consistent with suitable laboratory test data and shall account for all significant yielding, strength degradation, stiffness degradation, and hysteretic pinching indicated by such test data. Strength of elements shall be based on expected values considering material overstrength, strain hardening, and hysteretic strength degradation. Linear properties consistent with the provisions of Sec. 5.5.1 shall be permitted to be used for those elements demonstrated by the analysis to remain within their linear range of response. The *structure* shall be assumed to have a fixed *base* or, alternatively, it shall be permitted to use realistic assumptions with regard to the

stiffness and load carrying characteristics of the foundations consistent with site-specific soils data and rational principles of engineering mechanics.

For regular *structures* with independent orthogonal *seismic-force-resisting systems*, independent two-dimensional models shall be permitted to be constructed to represent each system. For *structures* having plan irregularity Type 1a, 1b, 4, or 5 of Table 5.2.3.2 or *structures* without independent orthogonal systems, a three-dimensional model incorporating a minimum of three dynamic degrees of freedom consisting of translation in two orthogonal plan directions and torsional rotation about the vertical axis at each level of the *structure* shall be used. Where the *diaphragms* are not rigid compared to the vertical elements of the lateral-force-resisting system, the model shall include representation of the diaphragm's flexibility and such additional dynamic degrees of freedom as are required to account for the participation of the *diaphragm* in the *structure's* dynamic response.

5.7.2 Ground Motion and Other Loading: Ground motion shall conform to the requirements of Sec. 5.6.2. The *structure* shall be analyzed for the effects of these ground motions simultaneously with the effects of dead load in combination with not less than 25 percent of the required live loads.

5.7.3 Response Parameters: For each ground motion analyzed, individual response parameters consisting of the maximum value of the individual member forces, Q_{Ej}, member inelastic deformations, γ_j, and interstory drifts, δ_{ij}, at each story shall be determined.

If at least seven ground motions are analyzed, the design values of member forces, Q_E, member inelastic deformations, γ_i, and interstory drift, Δ , shall be taken, respectively, as the average of the scaled Q_{Ej}, γ_i, and δ_i values determined from the analyses. If less than seven ground motions are analyzed, the design member forces, Q_E, design member inelastic deformations, γ_i and the design interstory drift, Δ, shall be taken as the maximum value of the scaled Q_{Ej}, γ_j, and δ_{ij} values determined from the analyses.

5.7.3.1 Member Strength: The adequacy of members to resist the load combinations of Sec 5.2.7 need not be evaluated.

> **Exception:** Where the *Provisions* requires the consideration of the special load combinations of Sec. 5.2.7.1, the maximum value of Q_{Ej} obtained from the suite of analyses shall be taken in place of the quantity $\Omega_0 Q_E$.

5.7.3.2 Member Deformation:. The adequacy of individual members and their connections to withstand the design deformation values, γ_i, predicted by the analyses shall be evaluated based on laboratory test data for similar components. The effects of gravity and other loads on member deformation capacity shall be considered in these evaluations. Member deformation shall not exceed two thirds of the value that results in loss of ability to carry gravity loads or that results in deterioration of member strength to less than the 67 percent of the peak value.

5.7.3.3 Interstory Drift: The design interstory drift obtained from the analyses shall not exceed 125 percent of the drift limit specified in Sec. 5.2.8.

5.7.4 Design Review: A design review of the *seismic-force-resisting system* and the structural analysis shall be performed by an independent team of *registered design professionals* in the

appropriate disciplines and others experienced in seismic analysis methods and the theory and application of nonlinear seismic analysis and structural behavior under extreme cyclic loads. The design review shall include, but not be limited to, the following:

1. Review of any site-specific seismic criteria employed in the analysis including the development of site-specific spectra and ground motion time histories,
2. Review of acceptance criteria used to demonstrate the adequacy of structural elements and systems to withstand the calculated force and deformation demands, together with that laboratory and other data used to substantiate these criteria,
3. Review of the preliminary design including the determination of the target displacement of the structure and the margins remaining beyond these displacements, and
4. Review of the final design of the entire structural system and all supporting analyses.

5.8 SOIL-STRUCTURE INTERACTION EFFECTS:

5.8.1 General: The requirements set forth in this section are permitted to be used to incorporate the effects of soil-*structure* interaction in the determination of the *design earthquake* forces and the corresponding *displacements* of the *structure*. The use of these requirements will decrease the design values of the *base shear*, lateral forces, and overturning moments but may increase the computed values of the lateral *displacements* and the secondary forces associated with the *P*-delta effects.

The requirements for use with the equivalent lateral force procedure are given in Sec. 5.8.2 and those for use with the modal analysis procedure are given in Sec. 5.8.3.

5.8.2 Equivalent Lateral Force Procedure: The following requirements are supplementary to those presented in Sec. 5.4.

5.8.2.1 Base Shear: To account for the effects of soil-*structure* interaction, the *base shear*, V, determined from Eq. 5.4.1-1 may be reduced to:

$$\tilde{V} = V - \Delta V \qquad (5.8.2.1\text{-}1)$$

The reduction, ΔV, shall be computed as follows:

$$\Delta V = \left[C_s - \tilde{C}_s \left(\frac{0.05}{\tilde{\beta}} \right)^{0.4} \right] \overline{W} \qquad (5.8.2.1\text{-}2)$$

where:

C_s = the *seismic response coefficient* computed from Eq. 5.4.1.1-1 using the fundamental natural period of the fixed-*base structure* (T or T_a) as specified in Sec.5.4.2,

$\tilde{C}_s$ = the *seismic response coefficient* computed from Eq. 5.4.1.1-1 using the fundamental natural period of the flexibly supported *structure* ($\tilde{T}$) defined in Sec. 5.8.2.1.1,

$\tilde{B}$ = the fraction of critical damping for the *structure*-foundation system determined in Sec. 5.8.2.1.2, and

$\overline{W}$ = the effective *gravity load* of the *structure*, which shall be taken as $0.7W$, except that for *structures* where the *gravity load* is concentrated at a single level, it shall be taken equal to W.

The reduced *base shear*, $\tilde{V}$, shall in no case be taken less than $0.7V$.

5.8.2.1.1 Effective Building Period: The effective period, $\tilde{T}$, shall be determined as follows:

$$\tilde{T} = T\sqrt{1 + \frac{\overline{k}}{K_y}\left(1 + \frac{K_y \overline{h}^2}{K_\theta}\right)} \qquad (5.8.2.1.1\text{-}1)$$

where:

T = the fundamental period of the *structure* as determined in Sec. 5.4.2;

$\overline{k}$ = the stiffness of the *structure* when fixed at the *base*, defined by the following:

$$\overline{k} = 4\pi^2\left(\frac{\overline{W}}{gT^2}\right) \qquad (5.8.2.1.1\text{-}2)$$

$\overline{h}$ = the effective height of the *structure,* which shall be taken as 0.7 times the total height, h_n, except that for *structures* where the *gravity load* is effectively concentrated at a single level, it shall be taken as the height to that level;

K_y = the lateral stiffness of the foundation defined as the horizontal force at the level of the foundation necessary to produce a unit deflection at that level, the force and the deflection being measured in the direction in which the *structure* is analyzed;

K_θ = the rocking stiffness of the foundation defined as the moment necessary to produce a unit average rotation of the foundation, the moment and rotation being measured in the direction in which the *structure* is analyzed; and

g = the acceleration of gravity.

The foundation stiffnesses, K_y and K_θ, shall be computed by established principles of foundation mechanics (see the *Commentary*) using soil properties that are compatible with the soil strain levels associated with the design earthquake motion. The average shear modulus, G, for the soils beneath the foundation at large strain levels and the associated shear wave velocity, v_s, needed in these computations shall be determined from Table 5.8.2.1.1 where:

v_{so} = the average shear wave velocity for the soils beneath the foundation at small strain levels (10^{-3} percent or less),

G_o = $\gamma v^2_{so}/g$ = the average shear modulus for the soils beneath the foundation at small strain levels, and

γ = the average unit weight of the soils.

TABLE 5.8.2.1.1 Values of G/G_o and v_s/v_{so}

	Peak Ground Acceleration, (g)			
	≤ 0.10	**≤ 0.15**	**0.20**	**≥ 0.30**
Value of G/G_o	0.81	0.64	0.49	0.42
Value of v_s/v_{so}	0.90	0.80	0.70	0.65

Alternatively, for *structures* supported on mat foundations that rest at or near the ground surface or that are embedded in such a way that the side *wall* contact with the soil cannot be considered to remain effective during the design ground motion, the effective period of the *structure* may be determined from:

$$\tilde{T} = T\sqrt{1 + \frac{25\alpha r_a \overline{h}}{v_s^2 T^2}\left(1 + \frac{1.12 r_a \overline{h}^2}{\alpha_\theta r_m^3}\right)} \qquad (5.8.2.1.1\text{-}3)$$

where:

α = the relative weight density of the *structure* and the soil defined by:

$$\alpha = \frac{\overline{W}}{\gamma A_o \overline{h}} \qquad (5\ 8.2.1.1\text{-}4)$$

r_a and r_m = characteristic foundation lengths defined by:

$$r_a = \sqrt{\frac{A_o}{\pi}} \qquad (5.8.2.1.1\text{-}5)$$

and

$$r_m = \sqrt[4]{\frac{4 I_o}{\pi}} \qquad (5.8.2.1.1\text{-}6)$$

where:

A_o = the area of the foundation,

I_o = the static moment of the foundation about a horizontal centroidal axis normal to the direction in which the *structure* is analyzed, and

5.8.2.1.2 Effective Damping: The *effective damping* factor for the *structure*-foundation system, $\tilde{\beta}$, shall be computed as follows:

$$\tilde{\beta} = \beta_o + \frac{0.05}{\left(\frac{\tilde{T}}{T}\right)^3} \qquad (5.8.2.1.2\text{-}1)$$

where β_o = the foundation damping factor as specified in Figure 5.8.2.1.2.

The values of β_o corresponding to S_{DS} = 0.375 in Figure 5.8.2.1.2 shall be determined by averaging the results obtained from the solid lines and the dashed lines.

The quantity r in Figure 5.8.2.1.2 is a characteristic foundation length that shall be determined as follows:

For $\overline{h}/L_o \leq 0.5$,

$$r = r_a = \sqrt{\frac{A_o}{\pi}} \qquad (5.8.2.1.2\text{-}2)$$

For $\overline{h}/L_o \geq 1$,

$$r = r_m = \sqrt[4]{\frac{4I_o}{\pi}} \qquad (5.8.2.1.2\text{-}3)$$

where:

L_o = the overall length of the side of the foundation in the direction being analyzed,

A_o = the area of the load-carrying foundation, and

I_o = the static moment of inertia of the load-carrying foundation.

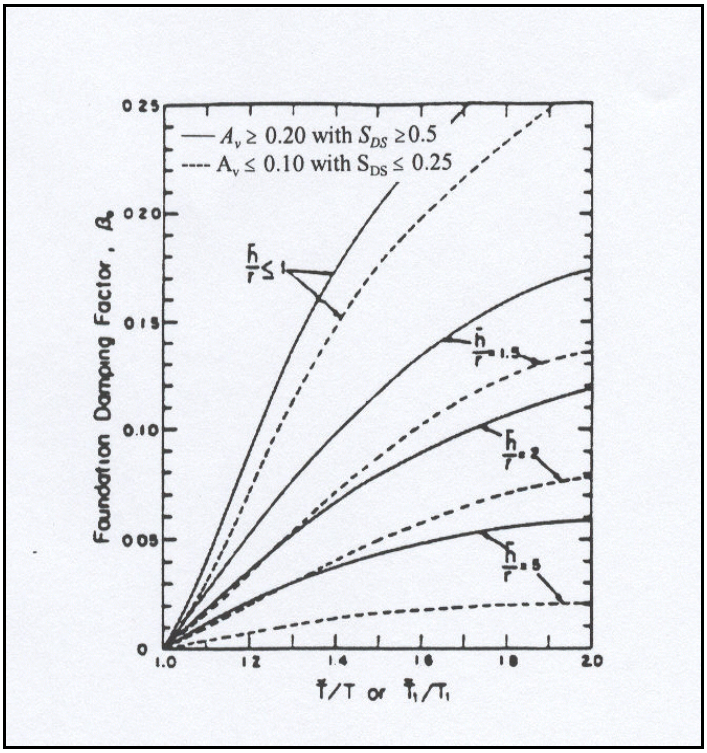

FIGURE 5.8.2.1.2 Foundation damping factor.

For intermediate values of $\bar{h}/L_0$, the value of r shall be determined by linear interpolation.

Exception: For *structures* supported on point bearing piles and in all other cases where the foundation soil consists of a soft stratum of reasonably uniform properties underlain by a much stiffer, rock-like deposit with an abrupt increase in stiffness, the factor β_o in Eq. 5.8.2.1.2-1 shall be replaced by:

$$\beta_o^{/} = \left(\frac{4D_s}{V_s \tilde{T}} \right)^2 \beta_o \qquad (5.8.2.1.2\text{-}4)$$

if $4D_s/v_s\tilde{T} < 1$ where D_s is the total depth of the stratum.

The value of $\tilde{\beta}$ computed from Eq. 5.8.2.1.2-1, both with or without the adjustment represented by Eq. 5.8.2.1.2-4, shall in no case be taken as less than $\tilde{\beta}$ = 0.05 or greater than $\tilde{\beta}$ = 0.20.

5.8.2.2 Vertical Distribution of Seismic Forces: The distribution over the height of the *structure* of the reduced total *seismic force*, $\tilde{V}$, shall be considered to be the same as for the *structure* without interaction.

5.8.2.3 Other Effects: The modified *story shears*, overturning moments, and torsional effects about a vertical axis shall be determined as for *structure*s without interaction using the reduced lateral forces.

The modified deflections, $\tilde{\delta}_x$, shall be determined as follows:

$$\tilde{\delta}_x = \frac{\tilde{V}}{V}\left(\frac{M_o h_x}{K_\theta} + \delta_x\right) \qquad (5.8.2.3)$$

where:

M_o = the overturning moment at the *base* determined in accordance with Sec. 5.4.5 using the unmodified *seismic forces* and not including the reduction permitted in the design of the foundation,

h_x = the height above the *base* to the level under consideration, and

δ_x = the deflections of the fixed-*base structure* as determined in Sec. 5.4.6.1 using the unmodified *seismic forces*.

The modified *story* drifts and *P-delta effects* shall be evaluated in accordance with the requirements of Sec. 5.4.6.2 using the modified *story shears* and deflections determined in this section.

5.8.3 Modal Analysis Procedure: The following requirements are supplementary to those presented in Sec. 5.5.

5.8.3.1 Modal Base Shears: To account for the effects of soil-*structure* interaction, the *base shear* corresponding to the fundamental mode of vibration, V_1, is permitted to be reduced to:

$$\tilde{V}_1 = V_1 - \Delta V_1 \qquad (5.8.3.1\text{-}1)$$

The reduction, ΔV_1, shall be computed in accordance with Eq. 5.8.2.1-2 with $\overline{W}_1$ taken as equal to the *gravity load* $\overline{W}_1$ defined by Eq. 5.5.4-2, C_s computed from Eq. 5.5.4-3 using the fundamental period of the fixed-*base structure*, T_1, and $\tilde{C}_s$ computed from Eq. 5.5.4-3 using the fundamental period of the elastically supported *structure*, $\tilde{T}_1$.

The period $\tilde{T}_1$ shall be determined from Eq. 5.8.2.1.1-1, or from Eq. 5.8.2.1.1-3 when applicable, taking $T = \tilde{T}_1$, evaluating $\overline{K}$ from Eq. 5.8.2.1.1-2 with $\overline{W} = \overline{W}_1$, and computing $\overline{h}$ as follows:

$$\overline{h} = \frac{\sum_{i=1}^{n} w_i \phi_{i1} h_i}{\sum_{i=1}^{n} w_i \phi_{i1}} \qquad (5.8.3.1\text{-}2)$$

The above designated values of $\overline{W}, \overline{h}$, T, and $\tilde{T}$ also shall be used to evaluate the factor α from Eq. 5.8.2.1.1-4 and the factor β_o from Figure 5.8.2.1.2. No reduction shall be made in the shear *components* contributed by the higher modes of vibration. The reduced *base shear*, $\tilde{V}_1$, shall in no case be taken less than $0.7V_1$.

5.8.3.2 Other Modal Effects: The modified modal *seismic forces*, *story shears*, and overturning moments shall be determined as for *structures* without interaction using the modified *base shear*, $\tilde{V}_1$, instead of V_1. The modified modal deflections, $\tilde{\delta}_{xm}$, shall be determined as follows:

$$\tilde{\delta}_{xm} = \frac{\tilde{V}_1}{V_1}\left[\frac{M_{o1} h_x}{K_\theta} + \delta_{xl}\right] \qquad (5.8.3.2\text{-}1)$$

and

$$\tilde{\delta}_{xm} = \delta_x \qquad \text{for } m = 2, 3, \ldots\ldots \qquad (5.8.3.2\text{-}2)$$

where:

M_{o1} = the overturning *base* moment for the fundamental mode of the fixed-*base structure*, as determined in Sec. 5.5.6 using the unmodified modal *base shear* V_1, and

δ_{xm} = the modal deflections at Level x of the fixed-*base structure* as determined in Sec. 5.5.5 using the unmodified modal shears, V_m.

The modified modal drift in a *story*, Δ_m, shall be computed as the difference of the deflections, δ_{xm}, at the top and bottom of the *story* under consideration.

5.8.3.3 Design Values: The design values of the modified shears, moments, deflections, and *story* drifts shall be determined as for *structures* without interaction by taking the square root of the sum of the squares of the respective modal contributions. In the design of the foundation, the overturning moment at the foundation-soil interface determined in this manner may be reduced by 10 percent as for *structures* without interaction.

The effects of torsion about a vertical axis shall be evaluated in accordance with the requirements of Sec. 5.5.8 and the *P-delta effects* shall be evaluated in accordance with the requirements of Sec. 5.4.6.2, using the *story shears* and drifts determined in Sec. 5.8.3.2.

Appendix to Chapter 5

NONLINEAR STATIC ANALYSIS

PREFACE: This appendix introduces nonlinear static analysis, a new seismic analysis procedure sometimes known as pushover analysis, for review and comment and for later adoption into the body of the *NEHRP Recommended Provisions*.

Although nonlinear static analysis has not previously been included in design provisions for new building construction, the procedure itself is not new and has been used for many years in both research and design applications. For example, nonlinear static analysis has been used for many years as a standard methodology in the design of offshore platform structures. It also has been adopted in several standard methodologies for the seismic evaluation and retrofit of building structures, including the *NEHRP Guidelines for the Seismic Rehabilitation of Buildings* (FEMA 273) and *Methodolgies for Post-earthquake Evaluation and Repair of Concrete and Masonry Buildings* (ATC 40). Nonlinear static analysis also forms the basis for earthquake loss estimation procedures contained in HAZUS, FEMA's nationally applicable earthquake loss estimation model. Finally, although it does not explicitly appear in the *NEHRP Recommended Provisions*, the nonlinear static analysis methodology forms the basis for the equivalent lateral force procedures contained in the *Provisions* for base-isolated structures and proposed for inclusion for energy-dissipated structures.

One of the key controversies surrounding the introduction of this methodology into the *Provisions* relates to the determination of the limit *deformation*, sometimes also called a target *displacement*. Several methodologies for estimating the amount of *deformation* induced in a *structure* by the *design earthquake* have been proposed and are included in various adoptions of the procedure. The approach presented in this appendix is based on statistical correlations of the *displacements* predicted by linear and nonlinear dynamic analyses of *structures* similar, but not identical, to the approach contained in FEMA 273.

A second controversy relates to the lack of consensus-backed acceptance criteria to be used to determine the adequacy of a design once the forces and *deformations* produced by *design earthquake* ground shaking are estimated. It should be noted that this same lack of acceptance criteria applies equally to the nonlinear response history approach, which already has been adopted into building codes.

Nonlinear static analysis provides a simplified method of directly evaluating nonlinear response of *structures* to strong earthquake ground shaking that can be an attractive alternative to the more complex procedures of nonlinear response history analysis. It is hoped that exposure of this approach through inclusion in this

appendix will allow the necessary consensus to be developed to permit later integration into the *Provisions* as such.

Users of this appendix also should consult the *Commentary* for guidance. Please direct all feedback on this appendix and its commentary to the BSSC.

5A.1 NONLINEAR STATIC ANALYSIS: A nonlinear static analysis shall consist of an analysis of a mathematical model of the *structure* that directly accounts for the nonlinear behavior of the *structure's* components under an incrementally increased pattern of lateral forces. In this procedure, a mathematical model of the *structure* is incrementally displaced to a target *displacement* through application of a series of lateral forces or until the *structure* collapses and the resulting internal forces, Q_{Ej}, and member *deformations*, γ_I, at each increment of loading are determined. At the target displacement for the *structure*, the resulting internal forces and deflections should be less than the capacity of each element calculated according to the applicable acceptance criteria in Sec. 5A.1.3. The analysis shall be performed in accordance with this section.

5A.1.1 Modeling: A mathematical model of the *structure* shall be constructed to represent the spatial distribution of mass and stiffness of the structural system considering the effects of component nonlinearity at *deformation* levels that exceed their elastic limit.

The nonlinear force-*deformation* characteristics of *components* shall be represented by suitable multilinear models. Unless analysis indicates that a *component* remains elastic, as a minimum a bilinear model shall be used for each *component*. The multilinear force-*deformation* characteristics for each *component*, termed a backbone, should include representation of the linear stiffness of the *component* before onset of yield, the yield strength, and the stiffness properties of the *component* after yield at various levels of *deformation*. These properties shall be consistent with principles of mechanics or laboratory data. Linear properties representing component behavior before yield shall be consistent with the provisions of Sec. 5.5.1. Strength of elements shall be based on expected values considering material overstrength and strain hardening. The properties of elements and components after yielding should account for strength and stiffness degradation due to softening or fracture as indicated by principles of mechanics or test data. The model for columns should reflect the influence of axial load when axial loads exceed 15 percent of the buckling load. The *structure* shall be assumed to have a fixed *base* or, alternatively, it shall be permitted to use realistic assumptions with regard to the stiffness and load-carrying characteristics of the foundations, consistent with site-specific soil data and rational principles of engineering mechanics.

For regular *structures* with independent orthogonal *seismic-force-resisting systems*, independent two-dimensional models shall be permitted to be constructed to represent each system. For *structures* having plan irregularities Types 4 and 5 of Table 5.2.3.2 or *structures* without independent orthogonal systems, a three-dimensional model incorporating a minimum of three degrees of freedom, consisting of translation in two orthogonal plan directions and torsional rotation about the vertical axis to each level of the *structure*, shall be used. Where the *diaphragms* are not rigid compared to the vertical elements of the lateral-force-resisting system, the model should include representation of the diaphragm's flexibility. A control point shall be selected for each model. This control point normally shall be taken as the center of mass of the

highest level of the *structure*. For *structures* with penthouses, the control point shall be taken as the center of mass of the level at the base of the penthouse. This level shall be termed the control level.

5A.1.2 Lateral Loads: A pattern of lateral loads shall be applied incrementally at the mass centroid of each level *I*. The pattern of lateral loads applied in each direction should follow the distribution obtained from a modal analysis for the fundamental mode of response in the direction under consideration as given by Sec. 5.5.5.

At each increment of lateral loading, *k*, the total force applied to the model shall be characterized by the base shear, V_k. The base shear at the initial increment of load, V_1, shall be taken as the design base shear calculated in accordance with Sec. 5.4.1. The base shear, *V*, should be incremented in steps that are sufficiently small to permit significant changes in individual *component* behavior, such as yielding, buckling or failure, to be detected. The *structure* shall be analyzed for these lateral forces simultaneously with the effects of *dead load* in combination with not less than 25 percent of the required *live loads*, reduced as permitted for the area of a single floor.

Loading shall be applied independently in each of two directions. At each load step, the total applied force, V_k, the lateral displacement of the control point, Δ_k, and the forces and deformations in each component shall be recorded.

5A.1.3 Limit Deformation: The incremental nonlinear analysis should be continued by increasing the base shear until the deflection at the control point exceeds 150 percent of the inelastic deflection. The expected inelastic *deformation* of the control panel shall be taken as the deflection predicted for the control point from a modal response spectrum analysis using a 5 percent damped design level response spectrum, considering only the fundamental mode of response in the direction under consideration, and factored by the coefficient C_i. When the ratio for the period, T_s, as defined in Sec. 4.1.2.6, to the fundamental period of the *structure* in the direction under consideration, T_1, is less than or equal to a value of 1.0, the coefficient C_i shall be taken as having a value of 1.0. Otherwise, the value of the coefficient C_i shall be calculated from the following equation:

$$C_i = \frac{(1 - T_s/T_1)}{R_d} + (T_s/T_1) \qquad \text{(5A.1.3-1)}$$

where T_s and T_i are as defined above and R_d is given by the following equation:

$$R_d = \frac{1.5R}{\Omega_0} \qquad \text{(5A.1.3-2)}$$

where *R* and Ω_0 are, respectively, the response modification and overstrength coefficients from Table 5.2.2.

5A.1.4 Design Response Parameters: For each lateral force analyzed, the design response parameters including interstory drift and member force and deformation shall be taken as the value obtained from the analysis at the expected inelastic displacement.

5A.1.4.1 Member Strength: The adequacy of members to resist the load combinations of Sec. 5.2.7 need not be evaluated.

> **Exception:** Where the *Provisions* require the consideration of the special load combinations of Sec. 5.2.7.1, the value of Ω_{Ei} obtained from the analysis at the expected inelastic deformation, as calculated from Sec. 5A.1.3, shall be taken in place of the quantity $\Omega_0 Q_E$.

5A.1.4.2 Member Deformation: The adequacy of individual members and their connections to withstand the design deformation values, γ_i, predicted by the analyses shall be evaluated based on laboratory test data for similar *components*. The effects of gravity and other loads on member deformation capacity shall be considered in these evaluations. Member deformation shall not exceed two thirds of a value that results in loss of ability to carry gravity loads or that results in deterioration of member strength to less than 67 percent of the peak value.

5A.1.4.3 Interstory Drift: The design interstory drift obtained from the analysis shall not exceed 125 percent of the drift limit specified in Sec. 5.2.8.

5A.1.5 Design Review: When the nonlinear static analysis method is used to design the *structure*, a design review of the *seismic-force-resisting system* and the structural analysis shall be performed by an independent team of *registered design professionals* in the appropriate disciplines and others experienced in seismic analysis methods and the theory and application of nonlinear seismic analysis and structural behavior under extreme cyclic loads. The design review shall include, but not be limited to, the following:

1. Review of any site-specific seismic criteria employed in the analysis including the development of site-specific spectra.,
2. Review of acceptance criteria used to demonstrate the adequacy of structural elements and systems to withstand the calculated force and deformation demands togther with that laboratory and other data used to substantiate these criteria,
3. Review the preliminary design including the determination of the expected inelastic displacement of the *structure* and the margins remaining beyond these *displacements*, and
4. Review of the final design of the entire structural system and all supporting analyses.

Chapter 6

ARCHITECTURAL, MECHANICAL, AND ELECTRICAL COMPONENTS DESIGN REQUIREMENTS

6.1 GENERAL: This chapter establishes minimum design criteria for architectural, mechanical, electrical, and nonstructural systems, *components*, and elements permanently attached to *structures*, including supporting *structures* and attachments (hereinafter referred to as "*components*"). The design criteria establish minimum equivalent static force levels and relative displacement demands for the design of *components* and their attachments to the *structure*, recognizing ground motion and structural amplification, *component* toughness and weight, and performance expectations.

This chapter also establishes minimum seismic design force requirements for *nonbuilding structures* that are supported by other *structures*. Seismic design requirements for *nonbuilding structures* that are supported at grade are prescribed in Chapter 14. However, the minimum seismic design forces for *nonbuilding structures* that are supported by another *structure* shall be determined in accordance with the requirements of Sec. 6.1.3 with R_p equal to the value of R specified in Chapter 14 and a_p = 2.5 for *nonbuilding structures* with flexible dynamic characteristics and a_p = 1.0 for *nonbuilding structures* with rigid dynamic characteristics. The distribution of lateral forces for the supported *nonbuilding structure* and all nonforce requirements specified in Chapter 14 shall apply to supported *nonbuilding structures*.

> **Exception:** For *structures* in *Seismic Design Categories* D, E and F if the combined weight of the supported *components* and *nonbuilding structures* with flexible dynamic characteristics exceeds 25 percent of the weight of the *structure*, the *structure* shall be designed considering interaction effects between the *structure* and the supported items.

Seismic Design Categories for *structures* are defined in Sec. 4.2. For the purposes of this chapter, *components* shall be considered to have the same *Seismic Design Category* as that of the *structure* that they occupy or to which they are attached unless otherwise noted.

In addition, all *components* are assigned a *component* importance factor (I_p) in this chapter. The default value for I_p is 1.00 for typical *components* in normal service. Higher values for I_p are assigned for *components* that contain hazardous substances, must have a higher level of assurance of function, or otherwise require additional attention because of their life-safety characteristics. *Component* importance factors are prescribed in Sec. 6.1.5.

All architectural, mechanical, electrical, and other nonstructural *components* in *structures* shall be designed and constructed to resist the equivalent static forces and displacements determined in accordance with this chapter. The design and evaluation of support *structures* and architectural *components* and equipment shall consider their flexibility as well as their strength.

> **Exception:** The following *components* are exempt from the requirements of this chapter:

1. All *components* in *Seismic Design Category* A,
2. Architectural *components* in *Seismic Design Category* B other than parapets supported by bearing walls or shear walls when the importance factor (I_p) is equal to 1.00,
3. Mechanical and electrical *components* in *Seismic Design Category* B,
4. Mechanical and electrical *components* in *Seismic Design Category* C when the importance factor (I_p) is equal to 1.00,
5. Mechanical and electrical *components* in *Seismic Design Categories* D, E, and F where I_p= 1.0 and flexible connections between the *components* and associated ductwork, piping, and conduit are provided or that are mounted at 4 ft (1.22 m) or less above a floor level and weigh 400 lb (1780 N) or less, or
6. Mechanical and electrical *components* in *Seismic Design Categories* C, D, E, and F where I_p= 1.0 and flexible connections between the *components* and associated ductwork, piping, and conduit are provided that weigh 20 lb (95 N) or less or, for distribution systems, weight 5 lb/ft (7 N/m) or less.

The functional and physical interrelationship of *components* and their effect on each other shall be considered so that the failure of an essential or nonessential architectural, mechanical, or electrical *component* shall not cause the failure of an essential architectural, mechanical, or electrical *component*.

6.1.1 References and Standards:

6.1.1.1 Consensus Standards: The following references are consensus standards and are to be considered part of these provisions to the extent referred to in this chapter:

ASME A17.1	American Society of Mechanical Engineers (ASME), ASME A17.1, *Safety Code For Elevators And Escalators*, 1996.
ASTM C635	American Society For Testing And Materials (ASTM), ASTM C635, *Standard Specification for the Manufacture, Performance, and Testing of Metal Suspension Systems for Acoustical Tile and Lay-in Panel Ceilings*, 1997.
ASME/BPV	American Society of Mechanical Engineers (ASME/BPV), *Boiler and Pressure Vessel Code*, including addendums through 2000.
ASTM C636	American Society for Testing and Materials (ASTM), ASTM C636, *Standard Practice for Installation of Metal Ceiling Suspension Systems for Acoustical Tile and Lay-in Panels*, 1996.

ANSI/ASME B31.1	American National Standards Institute/American Society of Mechanical Engineers, ANSI/ASME B31.1-98, *Power Piping*
ANSI/ASME B31.3	American National Standards Institute/American Society of Mechanical Engineers, ANSI/ASME B31.3-96, *Process Piping*
ANSI/ASME B31.4	American National Standards Institute/American Society of Mechanical Engineers, ANSI/ASME B31.4-92, *Liquid Transportation Systems for Hydrocarbons, Liquid Petroleum Gas, Anhydrous Ammonia, and Alcohols*
ANSI/ASME B31.5	American National Standards Institute/American Society of Mechanical Engineers, ANSI/ASME B31.5-92, *Refrigeration Piping*
ANSI/ASME B31.8	American National Standards Institute/American Society of Mechanical Engineers, ANSI/ASME B31.8-95, *Gas Transmission and Distribution Piping Systems*
ANSI/ASME B31.9	American National Standards Institute/American Society of Mechanical Engineers, ANSI/ASME B31.9-96, *Building Services Piping*
ANSI/ASME B.31.11	American National Standards Institute/American Society of Mechanical Engineers, ANSI/ASME B31.11-89 (Reaffirmed, 1998), *Slurry Transportation Piping Systems*
NFPA-13	National Fire Protection Association (NFPA), NFPA-13, *Standard for the Installation of Sprinkler Systems*, 1999.
IEEE- 344	Institute of Electrical and Electronic Engineers (IEEE). Standard 344, *Recommended Practice for Seismic Qualification of Class I E Equipment for Nuclear Power Generating Stations*, 1987.

6.1.1.2 Accepted Standards: The following references are standards developed within the industry and represent acceptable procedures for design and construction:

ASHRAE SRD	American Society of Heating, Ventilating, and Air Conditioning (ASHRAE), *Handbook*, "Seismic Restraint Design,"1999.
CISCA Recs./Zones 0-2	Ceilings and Interior Systems Construction Association (CISCA), *Recommendations for Direct-Hung Acoustical Tile and Lay-in Panel Ceilings, Seismic Zones 0-2*, 1991.
CISCA Recs/ Zones 3-4	Ceilings and Interior Systems Construction Association (CISCA), *Recommendations for Direct-Hung Acoustical Tile and Lay-in Panel Ceilings, Seismic Zones 3-4*, 1991.
SMACNA HVAC	Sheet Metal and Air Conditioning Contractors National Association (SMACNA), *HVAC Duct Construction Standards, Metal and Flexible*, 1995.

SMACNA Rectangular	Sheet Metal and Air Conditioning Contractors National Association (SMACNA), *Rectangular Industrial Duct Construction Standards*, 1980.
SMACNA Restraint	Sheet Metal and Air Conditioning Contractors National Association (SMACNA), *Seismic Restraint Manual Guidelines for Mechanical Systems*, 1991, including Appendix B, 1998.
AAMA 501.4	American Architectural Manufacturers Association (AAMA), *Recommended Static Test Method for Evaluating Curtain Wall and Storefront Systems Subjected to Seismic and Wind Induced Interstory Drifts*. Publication No. AAMA 501.4-2000.

6.1.2 Component Force Transfer: *Components* shall be attached such that the *component* forces are transferred to the *structure*. *Component* seismic *attachments* shall be bolted, welded, or otherwise positively fastened without consideration of frictional resistance produced by the effects of gravity. A continuous load path of sufficient strength and stiffness between the *component* and the supporting *structure* shall be verified. Local elements of the supporting structure shall be verified for the *component* forces where they control the design of the elements or their connections. The *component* forces shall be those determined in Section 6.1.3, except that modifications to F_p and R_p due to anchorage conditions need not be considered. The design documents shall include sufficient information relating to the *attachments* to verify compliance with the requirements of these provisions.

6.1.3 Seismic Forces: Seismic forces (F_p) shall be determined in accordance with Eq. 6.1.3-1:

$$F_p = \frac{0.4 a_p S_{DS} W_p}{\frac{R_p}{I_p}} \left(1 + 2\frac{z}{h} \right) \tag{6.1.3-1}$$

$$F_p = 1.6 S_{DS} I_p W_p \tag{6.1.3-2}$$

F_p is not required to be taken as greater than:

and F_p shall not be taken as less than:

$$F_p = 0.3 S_{DS} I_p W_p \tag{6.1.3-3}$$

where:

F_p = Seismic design force centered at the *component*'s center of gravity and distributed relative to *component*'s mass distribution.

S_{DS} = Spectral acceleration, short period, as determined from Sec. 4.1.2.5.

a_p = *Component* amplification factor that varies from 1.00 to 2.50 (select appropriate value from Table 6.2.2 or Table 6.3.2).

I_p = *Component* importance factor that is either 1.00 or 1.50 (see Sec.).

W_p = *Component* operating weight.

R_p = *Component* response modification factor that varies from 1.0 to 5.0 (select appropriate value from Table 6.2.2 or Table 6.3.2).

z = Height in *structure* of point of attachment of *component*. For items at or below the base, z shall be taken as 0. The value of z/h need not exceed 1.0.

h = Average roof height of *structure* relative to grade elevation.

The force, F_p, shall be applied independently longitudinally and laterally in combination with service loads associated with the *component*. Combine horizontal and vertical load effects as indicated in Sec. 5.2.7 substituting F_p for the term Q_E. The reliability/redundancy factor, ρ, is permitted to be taken equal to 1.

When positive and negative wind loads exceed F_p for nonstructural exterior walls, these wind loads shall govern the design. Similarly, when the building code horizontal loads exceed F_p for interior partitions, these building code loads shall govern the design.

In lieu of the forces determined in accordance with Eq. 6.1.3-1, accelerations at any level may be determined by the modal analysis procedures of Sec. 5.5 with R = 1.0. Seismic forces shall be in accordance with Eq. 6.1.3-4:

$$F_p = \frac{a_i a_p W_p}{R_p / I_p} A_x \qquad (6.1.3\text{-}4)$$

Where a_i is the acceleration at level I obtained from the modal analysis.

The upper and lower limits of F_p determined by Eq. 6.1.3-2 and 3 apply.

6.1.4 Seismic Relative Displacements: Seismic relative displacements (D_p) shall be determined in accordance with the following equations:

$$D_p = \delta_{xA} - \delta_{yA} \qquad (6.1.4\text{-}1)$$

D_p is not required to be taken as greater than:

$$D_p = (X - Y)\frac{\Delta_{aA}}{h_{sx}} \qquad (6.1.4\text{-}2)$$

For two connection points on separate *Structures* A and B or separate structural systems, one at level x and the other at level y, D_p shall be determined as:

$$D_p = \left|\delta_{xA}\right| + \left|\delta_{yB}\right| \qquad (6.1.4\text{-}3)$$

D_p is not required to be taken as greater than:

$$D_p = \frac{X\Delta_{aA}}{h_{sx}} + \frac{Y\Delta_{aB}}{h_{sx}} \qquad (6.1.4\text{-}4)$$

where:

D_p = Relative seismic displacement to the *component* must be designed to accommodate.

δ_{xA} = Deflection at building level x of *Structure* A, determined by an elastic analysis as defined in Sec. 5.2.8 and multiplied by the C_d factor.

δ_{yA} = Deflection at building level y of *Structure* A, determined by an elastic analysis as defined in Sec. 52.8 and multiplied by the C_d factor.

δ_{yB} = Deflection at building level y of *Structure* B, determined by an elastic analysis as defined in Sec. 5.2.8 and multiplied by the C_d factor.

X = Height of upper support attachment at level x as measured from the base.

Y = Height of lower support attachment at level y as measured from the base.

Δ_{aA} = Allowable story drift for *Structure* A as defined in Table 5.2.8.

Δ_{aB} = Allowable story drift for *Structure* B as defined in Table 5.2.8.

h_{sx} = Story height used in the definition of the allowable drift, Δ_a, in Table 5.2.8. Note that Δ_a/h_{sx} = the allowable drift index.

The effects of seismic relative displacements shall be considered in combination with displacement caused by other loads as appropriate.

6.1.5 Component Importance Factor: The *component* importance factor, I_p, shall be selected as follows:

$I_p = 1.5$ Life safety *component* is required to function after an earthquake.

$I_p = 1.5$ *Component* contains *hazardous contents*.

$I_p = 1.5$ Storage racks in occupancies open to the general public (e.g., warehouse retails stores).

$I_p = 1.0$ All other *components*.

In addition, for *structures* in *Seismic Use Group* III:

$I_p = 1.5$ All *components* needed for continued operation of the facility or whose failure could impair the continued operation of the facility.

6.1.6 Component Anchorage: *Components* shall be anchored in accordance with the following provisions.

6.1.6.1: The force in the connected part shall be determined based on the prescribed forces for the *component* specified in Sec. 6.1.3. Where *component* anchorage is provided by shallow expansion anchors, shallow chemical anchors or shallow (low deformability) cast-in-place anchors, a value of $R_p = 1.5$ shall be used in Sec. 6.1.3 to determine the forces in the connected part.

6.1.6.2: Anchors embedded in concrete or masonry shall be proportioned to carry the least of the following:

a. The design strength of the connected part,

b. 1.3 times the force in the connected part due to the prescribed forces, and

c. The maximum force that can be transferred to the connected part by the *component* structural system.

6.1.6.3: Determination of forces in anchors shall take into account the expected conditions of installation including eccentricities and prying effects.

6.1.6.4: Determination of force distribution of multiple anchors at one location shall take into account the stiffness of the connected system and its ability to redistribute loads to other anchors in the group beyond yield.

6.1.6.5: Power driven fasteners shall not be used for tension load applications in *Seismic Design Categories* D, E, and F unless approved for such loading.

6.1.6.6: The design strength of the anchors shall be determined in accordance with the provisions in Chapter 9.

6.1.6.7: For additional requirements for anchors to steel, see Chapter 10.

6.1.6.8: For additional requirements for anchors in masonry, see Chapter 11.

6.1.6.9: For additional requirements for anchors in wood, see Chapter 12.

6.1.7 Construction Documents: Construction documents shall be prepared by a registered design professional in a manner consistent with the requirements of the *Provisions*, as indicated

in Table 6.1.7, in sufficient detail for use by the *owner*, building officials, contractors, and inspectors.

TABLE 6.1.7 Construction Documents

Component Description	Provisions Reference		Required Seismic Design Categories
	Quality Assurance	Design	
Exterior nonstructural wall elements, including anchorage	3.2.8 No. 1	6.2.4	D, E, F
Suspended ceiling system, including anchorage	3.2.8 No. 3	6.2.6	D, E, F
Access Floors, including anchorage	3.8 No. 2	6.2.7	D, E, F
Steel storage racks, including anchorage	3.2.8 No. 2	6.2.9	D, E, F
Glass in *glazed curtain walls, glazed storefronts* and interior glazed *partitions*, including anchorage.	3.3.9 No. 3	6.2.10	D, E, F
HVAC ductwork containing hazardous materials, including anchorage.	3.2.9 No. 4	6.3.10	C, D, E, F
Piping systems and mechanical units containing flammable, combustible, or highly toxic materials.	3.2.9 No. 3	6.3.11 6.3.12 6.3.13	C, D, E, F
Anchorage of electrical equipment for emergency standby power systems	3.2.9 No. 1	6.3.14	C, D, E, F
Anchorage for all other electrical equipment	3.2.9 No. 2	6.3.14	E, F
Project-specific requirements for mechanical and electrical *components* and their anchorage	3.3.5	6.30	C, D, E, F

6.2 ARCHITECTURAL COMPONENT DESIGN:

6.2.1 General: Architectural systems, *components*, or elements (hereinafter referred to as "*components*") listed in Table 6.2.2 and their attachments shall meet the requirements of Sec. 6.2.2 through Sec. 6.2.9.

6.2.2 Architectural Component Forces and Displacements: Architectural *components* shall meet the force requirements of Sec. 6.1.3 and 6.4 and Table 6.2.2.

Exception: *Components* supported by chains or otherwise suspended from the structural system above are not required to meet the lateral seismic force requirements and seismic relative *displacement* requirements of this section provided that they cannot be damaged or cannot damage any other *component* when subject to seismic motion and they have ductile or articulating connections to the *structure* at the point of attachment. The gravity design load for these items shall be three times their operating load.

TABLE 6.2.2 Architectural Components Coefficients

Architectural Component or Element	$\mathbf{a_p}^{a}$	R_p^{b}
Interior Nonstructural Walls and Partitions (See also Sec. 6.8)		
Plain (unreinforced) masonry walls	1.0	1.5
All other walls and partitions	1.0	2.5
Cantilever Elements (Unbraced or braced to structural frame below its center of mass)		
Parapets and cantilever interior nonstructural walls	2.5	2.5
Chimneys and stacks where laterally supported by *structures*.	2.5	2.5
Cantilever elements (Braced to structural fame above its center of mass)		
Parapets	1.0	2.5
Chimneys and Stacks	1.0	2.5
Exterior Nonstructural Walls	1.0[b]	2.5
Exterior Nonstructural Wall Elements and Connections (see also Sec. 6.2.4)		
Wall Element	1.0	2.5
Body of wall panel connections	1.0	2.5
Fasteners of the connecting system	1.25	1
Veneer		
High deformabiliy elements and attachments	1.0	2.5
Low deformability and attachments	1.0	1.5
Penthouses (except when framed by an extension of the building frame)	2.5	3.5
Ceilings (see also Sec. 6.2.6)		
All	1.0	2.5
Cabinets		
Storage cabinets and laboratory equipment	1.0	2.5
Access floors (see also Sec. 6.2.7)		
Special access floors (designed in accordance with Sec. 6.2.7.2)	1	2.5
All other	1	1.5

Appendages and Ornamentations	2.5	2.5
Signs and Billboards	2.5	2.5
Other Rigid *Components*		
High deformability elements and attachments	1.0	3.5
Limited deformability elements and attachments	1.0	2.5
Low deformability elements and attachments	1.0	1.5
Other flexible *components*		
High deformability elements and attachments	2.5	3.5
Limited deformability elements and attachments	2.5	2.5
Low deformability elements and attachments	2.5	1.5

[a] A lower value for a_p may be justified by detailed dynamic analysis. The value for a_p shall not be less than 1.00. The value of $a_p = 1$ is for equipment generally regarded as rigid and rigidly attached. The value of $a_p = 2.5$ is for flexible *components* or flexibility attached *components*. See Chapter 2 for definitions of rigid flexible *components* including attachments.

[b] Where flexible diaphragms provide lateral support for walls and partitions, the design forces for anchorage to the diaphragm shall be specified in Sec. 5.2.5.

6.2.3 Architectural Component: Architectural *components* that could pose a life-safety hazard shall be designed for the seismic relative displacement requirements of Sec. 6.1.4. Architectural *components* shall be designed for vertical deflection due to joint rotation of cantilever structural members.

6.2.4 Exterior Nonstructural Wall Elements and Connections:

6.2.4.1 General: Exterior nonstructural wall panels or elements that are attached to or enclose the *structure* shall be designed to resist the forces in accordance with Eq. 6.1.3-1 or 6.1.3-2 and shall accommodate movements of the *structure* resulting from response to the design basis ground motion, D_p, or temperature changes. Such elements shall be supported by means of positive and direct structural supports or by mechanical connections and fasteners in accordance with the following requirements:

a. Connections and panel joints shall allow for a relative movement between stories for not less than the calculated story drift D_p or ½ in. (13 mm), whichever is greater..

b. Connections to permit movement in the plane of the panel for story drift shall be sliding connections using slotted or oversize holes, connections that permit movements by bending of steel, or other connections that provide equivalent sliding or ductile capacity.

c. Bodies of connectors shall have sufficient deformability and rotation capacity to preclude fracture of the concrete of low deformation failures at or near welds.

d. All fasteners in the connecting system such as bolts, inserts, welds, and dowels and the body of the connectors shall be designed for the force, F_p, determined in by Eq. 6.1.3-2 with vallues of R_p and a_p taken from Table 6.2.2 applied at the center of mass of the panel.

e. Anchorage using flat straps embedded in concrete or masonry shall be attached to or hooked around reinforcing steel or otherwise terminated so as to effectively transfer forces to the reinforcing steel.

6.2.4.2 Glass: Glass is a *glazed curtain walls and storefronts* shall be designed and installed in accordance with sec. 6.2.10.

6.2.5 Out-of-Plane-Bending: Transverse or out-of-plane bending or deformation of a *component* or system that is subjected to forces as determined in Sec. 6.1.3 shall not exceed the deflection capacity of the *component* or system.

6.2.6 Suspended Ceilings: Suspended ceilings shall be designed to meet the seismic force requirements of Sec. 6.2.6.1. In addition, suspended ceilings shall meet the requirements of either Industry Standard Construction as modified in Sec. 6.2.6.2 or integral construction as specified in Sec. 6.2.6.3.

6.2.6.1 Seismic Forces: Suspended ceilings shall be designed to meet the force requirements of Sec. 6.1.3.

The weight of the ceiling, W_p, shall include the ceiling grid and panels; light fixtures if attached to, clipped to, or laterally supported by the ceiling grid; and other *components* that are laterally supported by the ceiling. W_p shall be taken as not less than 4 psf (19 N/m^2).

The seismic force, F_p, shall be transmitted through the ceiling attachments to the building structural elements or the ceiling-*structure* boundary.

Design of anchorage and connections shall be in accordance with these provisions.

6.2.6.2 Industry Standard Construction: Unless designed in accordance with Sec. 6.2.6.3, suspended ceilings shall be designed and constructed in accordance with this section.

6.2.6.2.1 Seismic Design Category C: Suspended ceilings in Seismic Design Category C shall be designed and installed in accordance with CISCA Rec for Zones 0-2, except that seismic forces shall be determined in accordance with Sec. 6.1.3 and 6.2.6.1.

Sprinkler heads and other penetrations in Seismic Design Category C shall have a minimum of 1/4 inch (6 mm) clearance on all sides.

6.2.6.2.2 Seismic Design Categories D, E, and F: Suspended ceilings in *Seismic Design Categories* D, E, and F be designed and installed in accordance with CISCA Rec for Zones 3-4 and the additional requirements listed in this subsection.

a. A heavy duty T-bar grid system shall be used.

b. The width of the perimeter supporting closure angle shall be not less than 2 in. (50 mm). In each orthogonal horizontal direction, one end of the ceiling grid shall be attached to the

closure angle. The other end in each horizontal direction shall have a 3/4 in. (19 mm) clearance from the wall and shall rest upon and be free to slide on a closure angle.

c. For ceiling areas exceeding 1000 ft^2 (92.9 m^2), horizontal restraint of the ceiling to the structural system shall be provided. The tributary areas of the horizontal restraints shall be approximately equal.

> **Exception:** Rigid braces are permitted to be used instead of diagonal splay wires. Braces the attachments to the structural system above shall be adequate to limit relative lateral deflections at point of attachment of ceiling grid to less than 1/4 in. (6 mm) for the loads prescribed in Sec. 6.1.3.

d. For ceiling areas exceeding 2500 ft^2 (232 m^2), a seismic separation joint or full height partition that breaks the ceiling up into areas not exceeding 2500 ft^2 shall be provided unless structural analyses are performed of the ceiling bracing system for the prescribed seismic forces which demonstrate ceiling system penetrations and closure angles provide sufficient clearance to accommodate the additional movement. Each areas shall be provided with closure angles in accordance with Item b and horizontal restraints or bracing in accordance with Item c.

e. Except where rigid braces are used to limit lateral deflections, sprinkler heads and other penetrations shall have a 2 in. (50 mm) oversize ring, sleeve, or adapter through the ceiling tile to allow for free movement of at least 1 in. (25 mm) in all horizontal directions. Alternatively, a swing joint can accommodate 1 in. (25 mm) of ceiling movements in all horizontal directions are permitted to be provided at the top of the sprinkler head extension.

f. Changes in ceiling plan elevation shall be provided with positive bracing.

g. Cable trays and electrical conduits shall be supported independently of the ceiling.

h. Suspended ceilings shall be subject to the special inspection requirements of Sec. 3.3.9 of the *Provisions*.

6.2.6.3 Integral Ceiling/Sprinkler Construction: As a alternative to providing large clearances around sprinkler system penetrations through ceiling systems, the sprinkler system and ceiling grid are permitted to be designed and tied together as an integral unit. Such a design shall consider the mass and flexibility of all elements involved, including: ceiling system, sprinkler system, light fixtures, and mechanical (HVAC) appurtenances. The design shall be performed by a *registered design professional*.

6.2.7 Access Floors:

6.2.7.1 General: Access floors shall be designed to meet the force provisions of Sec. 6.1.3 and the additional provisions of this section. The weight of the access floor, W_p, shall include the weight of the floor system, 100 percent of the weight of all equipment fastened to the floor, and 25 percent of the weight of all equipment supported by but not fastened to the floor. The seismic force, F_p, shall be transmitted from the top surface of the access floor to the supporting *structure*.

Overturning effects of equipment fastened to the access floor panels also shall be considered. The ability of "slip on" heads for pedestals shall be evaluated for suitability to transfer overturning effects of equipment.

When checking individual pedestals for overturning effects, the maximum concurrent axial load shall not exceed the portion of W_p assigned to the pedestal under construction.

6.2.7.2 Special Access Floors: Access floors shall be considered to be "special access floors" if they are designed to comply with the following considerations:

1. Connections transmitting seismic loads consist of mechanical fasteners, concrete anchors, welding, or bearing. Design load capacities comply with recognized design codes and/or certified test results.
2. Seismic loads are not transmitted by friction produced solely by the effects of gravity, powder-actuated fasteners (shot pins), or adhesives.
3. The bracing system shall be designed considering the destabilizing effects of individual members buckling in compression.
4. Bracing and pedestals are of structural or mechanical shape produced to ASTM specifications that specify minimum mechanical properties. Electrical tubing shall be used.
5. Floor stingers that are designed to carry axial seismic loads that are mechanically fastened to the supporting pedestals are used.

6.2.8 Partitions:

6.2.8.1 General: *Partitions* that are tied to the ceiling and all partitions greater than 6 ft (1.8 m) in height shall be laterally braced to the building *structure*. Such bracing shall be independent o f any ceiling splay bracing. Bracing shall be spaced to limit horizontal deflection at the partition head to comparable with ceiling deflection requirements as determined in Sec. 6.2.6 for suspended ceilings and Sec. 6.2.2 for other systems.

6.2.8.2 Glass: Glass in glazed *partitions* shall be designed and installed in accordance with Sec. 6.2.10.

6.2.9 Steel Storage Racks: Steel storage racks shall be designed to meet the force requirements of Chapter 14.

6.2.10 Glass in Glazed Curtain Walls, Glazed Storefronts, and Glazed Partitions:

6.2.10.1 General: Glass in *glazed curtain walls, glazed storefronts* and glazed partitions shall meet the relative displacement requirement of Eq. 6.2.10.1-1:

$$\Delta_{fallout} \geq 1.25 ID_p \qquad (6.2.10.1\text{-}1)$$

or 0.5 inch (13 mm), whichever is greater, where:

$\Delta_{fallout}$ = the relative seismic displacement (drift) causing glass fallout from the curtain wall, storefront wall or partition (Section 6.2.10.2).

D_p = the relative seismic displacement that the *component* must be designed to accommodate (Eq. 6.1.4-1). D_p shall be determined over the height of the glass *component* under consideration.

I = the occupancy importance factor (Table 1.4).

Exceptions:

1. Glass with sufficient clearances from its frame such that physical contact between the glass and frame will not occur at the design drift, as demonstrated by Eq. 6.2.10.1-2, shall be exempt from the provisions of Eq. 6.2.10.1-1:

$$D_{clear} \geq 1.25 D_p \qquad (6.2.10.1\text{-}2)$$

or 0.5 inch (13 mm); whichever is greater, where:

$$D_{clear} = 2c_1\left(1+\frac{h_p c_2}{b_p c_1}\right)$$

h_p = the height of the rectangular glass,

b_p = the width of the rectangular glass,

c_1 = the clearance (gap) between the vertical glass edges and the frame, and

c_2 = the clearance (gap) between the horizontal glass edges and the frame.

2. Fully tempered monolithic glass in *Seismic Use Groups I* and *II* located no more than 10 ft (3 m) above a walking surface shall be exempt from the provisions of Eq. 6.2.10.1-1.

3. Annealed or heat-strengthened laminated glass in single thickness with interlayer no less than 0.030 in. (0.76 mm) that is captured mechanically in a wall system glazing pocket, and whose perimeter is secured to the frame by a wet glazed gunable curing elastomeric sealant perimeter bead of ½ in. (13 mm) minimum glass contact width, or other approved anchorage system, shall be exempt from the provisions of Eq. 6.2.10.1-1.

6.2.10.2 Seismic Drift Limits for Glass Components: $\Delta_{fallout}$, the drift causing glass fallout from the curtain wall, storefront or partition, shall be determined in accordance with SMACNA Restraint, or by engineering analysis.

6.3 MECHANICAL AND ELECTRICAL COMPONENT DESIGN:

6.3.1 General: Attachments and equipment supports for the mechanical and electrical systems, *components*, or elements (hereinafter referred to as "*components*") shall meet the requirements of Sec. 6.3.2 through Sec. 6.3.16.

6.3.2 Mechanical and Electrical Component Forces and Displacements: Mechanical and electrical *components* shall meet the force and seismic relative displacement requirements of Sec. 6.1.3, Sec. 6.1.4, and Table 6.3.2.

Some complex equipment such as valve operators, turbines and generators, and pumps and motors are permitted to be functionally connected by mechanical links not capable of transferring the seismic loads or accommodating seismic relative displacements and may require special design considerations such as a common rigid support or skid.

> **Exception:** *Components* supported by chains or similarly suspended from the *structure* above or not required to meet the lateral seismic force requirements and seismic relative displacement requirements of this section provided that they cannot be damaged or cannot damage any other *component* when subject to seismic motion and they have high deformation or articulating connections to the building at the point of attachment. The gravity design load for these items shall be three times their operating load.

TABLE 6.3.2 Mechanical and Electrical Components Coefficients

Mechanical and Electrical Component or Element[b]	a_p[a]	R_p
General Mechanical		
Boilers and Furnaces	1.0	2.5
Pressure vessels on skirts and free-standing	2.5	2.5
Stacks	2.5	2.5
Cantilevered chimneys	2.5	2.5
Other	1.0	2.5
Manufacturing and Process Machinery		
General	1.0	2.5
Conveyors (nonpersonnel)	2.5	2.5
Piping Systems		
High deformability elements and attachments	1.0	3.5
Limited deformability elements and attachments	1.0	2.5
Low deformability elements and attachments	1.0	1.5

Mechanical and Electrical Component or Element[b]	a_p[a]	R_p
HVAC System Equipment		
Vibration isolated	2.5	2.5
Non-vibration isolated	1.0	2.5
Mounted in-line with ductwork	1.0	2.5
Other	1.0	2.5
Elevator *Components*	1.0	2.5
Escalator *Components*	1.0	2.5
Trussed Towers (free-standing or guyed)	2.5	2.5
General Electrical		
Distributed systems (bus ducts, conduit, cable tray)	2.5	5
Equipment	1.0	2.5
Lighting Fixtures	1.0	1.5

[a] A lower value for a_p is permitted provided a detailed dynamic analysis is performed which justifies a lower limit. The value for a_p shall not be less than 1.00. The value of $a_p = 1$ is for equipment generally regarded as rigid or rigidly attached. The value of $a_p = 2.5$ is for flexible *components* or flexibly attached *components*. See Chapter 2 for definitions of rigid and flexible *components* including attachments.

[b] *Components* mounted on vibration isolation systems shall have a bumper restraint or snubber in each horizontal direction. The design force shall be taken as $2F_p$ if the maximum clearance (air gap) between the equipment support frame and restraint is greater than 1/4 inch. If the maximum clearance is specified on the *construction documents* to be not greater than 1/4 inch, the design force may be taken as F_p.

6.3.3 Mechanical and Electrical Component Period: The fundamental period of the mechanical and electrical *component* (and its attachment to the building), T_p, may be determined by the following equation provided that the *component* and attachment can be reasonably represented analytically by a simple spring and mass single-degree-of-freedom system:

$$T_p = 2\pi\sqrt{\frac{W_p}{K_p g}} \tag{6.3.3}$$

where:

T_p = *Component* fundamental period,

W_p = *Component* operating weight,

g = Gravitational acceleration, and

K_p = Stiffness of resilient support system of the *component* and attachment, determined in terms of load per unit deflection at the center of gravity of the *component*.

Note that consistent units must be used.

Alternatively, determine the fundamental period of the *component* in seconds, T_p, from experimental test data or by a properly substantiated analysis.

6.3.4 Mechanical and Electrical Component Attachments: The stiffness of mechanical and electrical *component* attachments shall be designed such that the load path for the *component* performs its intended function.

6.3.5 Component Supports: Mechanical and electrical *component* supports and the means by which they are attached to the *component* shall be designed for the forces determined in Sec. 6.1.3 and in conformance with Chapters 5 though 9, as appropriate, for the materials comprising the means of attachment. Such supports include structural members, braces, frames, skirts, legs, saddles, pedestals, cables, guys, stays, snubbers, ans tethers. *Component* supports may be forged or cast as a part of the mechanical or electrical *component*. If standard or proprietary supports are used, they shall be designed by either load rating (i.e., testing) or for the calculated seismic forces. In addition, the stiffness of the support, when appropriate, shall be designed such that the seismic load path for the *component* performs its intended function.

Component supports shall be designed to accommodate the seismic relative displacements between points of support determined in accordance with Sec. 6.1.4.

In addition, the means by which supports are attached to the *component*, except when integral (i.e., cast or forged), shall be designed to accommodate both the forces and displacements determined in accordance with Sec. 6.1.3 and 6.1.4. If the value of I_p = 1.5 for the *component*, the local region of the support attachment point to the *component* shall be evaluated for the effect of the load transfer on the *component* wall.

6.3.6 Component Certification: The manufacturer's certificate of compliance with the force requirements of the *Provisions* shall be submitted to the regulatory agency when required by the contract documents or when required by the regulatory agency.

6.3.7 Utility and Service Lines at Structure Interfaces: At the interface of adjacent *structures* or portions of the same *structure* that may move independently, utility lines shall be provided with adequate flexibility to accommodate the anticipated differential movement between the ground and the *structure*. Differential displacement calculations shall be determined in accordance with Sec. 6.1.4.

6.3.8 Site-Specific Considerations: The possible interruption of utility service shall be considered in relation to designated seismic systems in *Seismic Use Group III* as defined in Sec. 1.3.1. Specific attention shall be given to the vulnerability of underground utilities and utility interfaces between the *structure* and the ground in all situations where *Site Class* E and F soil is present and where the seismic coefficient C_a is equal to or greater than 0.15.

6.3.9 Storage Tanks:

6.3.9.1 Above-Grade Storage Tanks: For storage tanks mounted above grade in *structures*, attachments, supports, and the tank shall be designed to meet the force requirements of Chapter 14.

6.3.10 HVAC Ductwork: Attachments and supports for HVAC ductwork systems shall be designed to meet the force and displacement requirements of Sec. 6.1.3 and 6.1.4 and the additional requirements of this section. In addition to their attachments and supports, ductwork systems designated as having I_p greater than 1.0 shall be designed to meet the force and displacement requirements of Sec. 6.1.3 and 6.1.4 and the additional requirements of this section. Where HVAC ductwork runs between *structures* that could displace relative to one another and for isolated *structures* where the HVAC ductwork crosses the isolation interface, the HVAC ductwork shall be designed to accommodate the seismic relative displacements specified in Sec. 6.1.4.

Seismic restraints are not required for HVAC ducts with $I_p = 1.0$ if either of the following conditions are met for the full length of each duct run:

a. HVAC ducts are suspended from hangers, and all hangers are 12 in. (305 mm) or less in length from the top of the duct to the supporting *structure* and the hangers are detailed to avoid significant bending of the hangers and their attachments.

or

b. HVAC ducts have a cross-sectional area of less than 6 ft^2 (0.557 m^2).

HVAC duct systems fabricated and installed in accordance with the SMACNA HVAC, SMACNA Rectangular, and SMACNA Restraint shall be deemed to meet the lateral bracing requirements of this section.

Equipment items installed in-line with the duct system (e.g., fans, heat exchangers, and humidifiers) with an operating weight greater than 75 lb (334 N) shall be supported and laterally braced independently of the duct system and shall meet the force requirements of Sec. 6.1.3. Appurtenances such as dampers, louvers, and diffusers shall be positively attached with mechanical fasteners. Unbraced piping attached to in-line equipment shall be provided with adequate flexibility to accommodate differential displacements.

6.3.11 Piping Systems: Attachments and supports for piping systems shall be designed to meet the force and displacement requirements of Sec. 6.1.3 and 6.1.4 and the additional requirements of this section. In addition to their attachments and supports, piping systems designated as having I_p greater than 1.0 shall be designed to meet the force and displacement provisions of Sec. 6.1.3 and 6.1.4 and the additional requirements of this section. When piping systems are attached to *structures* that could displace relative to one another and for isolated *structures*, including foundations, where the piping system crosses the isolation interface, the piping system shall be designed to accommodate the seismic relative displacements specified in Sec. 6.1.4.

Seismic effects that shall be considered in the design of a piping system include the dynamic effects of the piping system, its contents, and, when appropriate, its supports. The interaction between the piping system and the supporting *structures*, including other mechanical and electrical equipment, also shall be considered.

See Sec. 6.3.16 for elevator system piping requirements.

6.3.11.1 Fire Protection Sprinkler Systems: Fire protection sprinkler systems designed and constructed in accordance with NFPA 13 shall be deemed to meet the force, displacement, and other requirements of this section provided that the seismic design force and displacement calculated in accordance with NFPA 13, multiplied by a factor of 1.4, is not less than that determined using the *Provisions*.

6.3.11.2 Other Piping Systems. The following documents have been adopted as national standards by the American National Standards Institute (ANSI) and are appropriate for use in the seismic design of piping systems provided that the seismic design forces and displacements used are comparable to those determined using the *Provisions*: ANSI/ASME B31.1, ANSI/ASME B31.3, ANSI/ASME B31.4, ANSI/ASME B31.5, ANSI/ASME B31.9, ANSI/ASME B31.11, and ANSI/ASME 31.8.

> **Exception:** Piping systems designated as having an I_p greater than 1.0 shall not be designed using the simplified analysis procedures of ANSI/ASME B31.9, Sec. 919.4.1 (a).

The following requirements shall also be met for piping systems designated as having an I_p greater than 1.0.

a. Under design loads and displacements, piping shall not be permitted to impact other *components*.

b. Piping shall accommodate the effects of relative displacements that may occur between piping support points on the *structure* on the ground, other mechanical and/or electrical equipment, and other piping

6.3.11.2.1 Supports and Attachments for Other Piping: In addition to meeting the force, displacement, and other requirements of this section, attachments and supports for piping shall be subject to the following other requirements and limitations.

a. Attachments shall be designed in accordance with Sec. 6.1.6.

b. Seismic supports are not required for:

    1. Piping supported by rod hangers provided that all hangers in the pipe run are 12 in. (305 mm) or less in length from the top of the pipe to the supporting *structure* and the pipe can accommodate the expected deflections. Rod hangers shall not be constructed in a manner that would subject the rod to bending moments.

    2. High deformability piping in *Seismic Design Categories* D, E, and F designated as having I_p greater than 1.0 and a nominal pipe size of 1 in. (25 mm) or less when

provisions are made to protect the piping from impact or to avoid the impact of larger piping or other mechanical equipment.

3. High deformability piping in *Seismic Design Category* C designated as having an I_p greater than 1.0 and a nominal pipe size of 2 in. (51 mm) or less when provisions are made to protect the piping from impact or to avoid the impact of larger piping or other mechanical equipment.

4. High deformability piping in *Seismic Design Categories* D, E, and F designated as having an I_p equal to 1.0 and a nominal pipe size of 3 in. (76 mm) or less.

c. Seismic supports shall be constructed so that support engagement is maintained.

6.3.12 Boilers and Pressure Vessels: Attachments and supports for boilers and pressure vessels shall be designed to meet the force and displacement provisions of Sec. 6.1.3 and 6.1.4 and the additional provisions of this section. In addition to their attachments and supports, boilers and pressure vessels designated as having an I_p = 1.5 themselves shall be designed to meet the force and displacement provisions of Sec. 6.1.3 and 6.1.4.

Seismic effects that shall be considered in the design of a boiler or pressure vessel include the dynamic effects of the boiler or pressure vessel and it supports, sloshing of liquid contents, loads from attached *components* such as piping, and the interaction between the boiler or pressure vessel and its support.

6.3.12.1 ASME Boilers and Pressure Vessels: Boilers or pressure vessels designed in accordance with ANSI/ASME B31.9 shall be deemed to meet the force, displacement, and other requirements of this section. In lieu of the specific force and displacement provisions provided in the ASME code, the force and displacement provisions of Sec. 6.1.3 and 6.1.4 shall be used.

6.3.12.2 Other Boilers and Pressure Vessels: Boilers and pressure vessels designated as having an I_p = 1.5 but not constructed in accordance with the provisions of ANSI/ASME B31.9 shall meet the following provisions:

a. The design strength for seismic loads of combination with other service loads and appropriate environmental effects shall not exceed the following:

   (1) For boilers and pressure vessels constructed with ductile materials (e.g., steel aluminum or copper), 90 percent of the material minimum specified yield strength .

   (2) For threaded connections in boilers or pressure vessels or their supports constructed with ductile materials, 70 percent of the material minimum specified yield strength.

   (3) For boilers and pressure vessels constructed with nonductile materials (e.g., plastic, cast iron, or ceramics), 25 percent of the material minimum specified tensile strength.

   (4) For threaded connections in boilers or pressures vessels or their supports constructed with nonductile materials, 20 percent of the material minimum specified tensile strength.

b. Provisions shall be made to mitigate seismic impact for boiler and pressure vessel *components* constructed of nonductile materials or in cases where material ductility is reduced (e.g., low temperature applications).

c. Boilers and pressure vessels shall be investigated to ensure that the interaction effects between them and other constructions are acceptable.

6.3.12.3 Supports and Attachments for Boilers and Pressure Vessels: Attachments and supports for boilers and pressure vessels shall meet the following provisions:

a. Attachments and supports transferring seismic loads shall be constructed of materials suitable for the application and designed and constructed in accordance with nationally recognized structural code such as, when constructed of steel, AISC LRFD and AISC ASD (see Chapter 8 for full references).

b. Attachments embedded in concrete shall be suitable for cyclic loads.

c. Seismic supports shall be constructed so that support engagement is maintained.

6.3.13 Mechanical Equipment Attachments and Supports: Attachments and supports for mechanical equipment not covered in Sec. 6.3.8 through 6.3.12 or 6.3.16 shall be designed to meet the force and displacement requirements of Sec. 6.1.3 and 6.1.4 and the additional requirements of this section. In addition, mechanical equipment designated as having an I_p greater than 1.0 shall be designed to meet the force and displacement requirements of Sec. 6.1.3 and 6.1.4 and the additional requirements of this section.

When required, seismic effects that shall be considered in the design of mechanical equipment, attachments and their supports include dynamic effects of the equipment, its contents, and when appropriate its supports. The interaction between the equipment and the supporting *structures*, including other mechanical and electrical equipment, also shall be considered.

6.3.13.1 Mechanical Equipment: Mechanical equipment having an I_p greater than 1.0 shall meet the following requirements:

a. Provisions shall be made to eliminate seismic impact for equipment *components* vulnerable to impact, equipment *components* constructed of nonductile materials, and in cases where material ductility is reduced (e.g., low temperature applications).

b. The possibility for loadings imposed on the equipment by attached utility or service lines due to differential motions of points of support from separate *structures* shall be evaluated.

In addition, *components* of mechanical equipment designated as having an I_p greater than 1.0 and containing sufficient material that would be hazardous if released shall be designed for seismic loads. The design strength for seismic loads in combination with other service loads and appropriate environmental effects such as corrosion shall be based on the following:

a. For mechanical equipment constructed with ductile materials (e.g., steel, aluminum, or copper), 90 percent of the equipment material minimum specified yield strength.

b. For threaded connections in equipment constructed with ductile materials, 70 percent of the material minimum specified yield strength.

c. For mechanical equipment constructed with nonductile materials (e.g., plastic, cast iron, or ceramics), 25 percent of the equipment material minimum tensile strength.

d. For threaded connections in equipment constructed with nonductile, 20 percent of the material minimum specified yield strength.

6.3.13.2 Attachments and Supports for Mechanical Equipment: Attachments and supports for mechanical equipment shall meet the following requirements:

a. Attachments and supports transferring seismic loads shall be constructed of materials suitable for the application and designated and constructed in accordance with a nationally recognized standard specification such as, when constructed of steel, AISC LRFD and AISC ASD.

b. Friction clips shall not be used for anchorage attachment.

c. Expansion anchors shall not be used for non-vibration isolated mechanical equipment rated over 10 hp (7.45 kW).

Exception: Undercut expansion anchors are permitted.

d. Supports shall be specifically evaluated if weak-axis bending of cold-formed support steel is relied on for the seismic load path.

e. *Components* mounted on vibration isolation systems shall have a bumper restraint or snubber in each horizontal direction, and vertical restraints shall be provided where required to resist overturning. Isolator housings and restraints shall be constructed of ductile materials. (See additional design force requirements in Table 6.3.2.) A viscoelastic pad or similar material of appropriate thickness shall be used between the bumper and equipment item to limit the impact load.

f. Seismic supports shall be constructed so that support engagement is maintained.

6.3.14 Electrical Equipment Attachments and Supports: Attachments and supports for electrical equipment shall be designed to meet the force and displacement requirements of Sec. 6.1.3 and 6.1.4 and the additional requirements of this section. In addition, electrical equipment designated as having I_P greater than 1.0 shall be designed to meet the force displacement requirements of Sec. 6.1.3 and 6.1.4 and the additional requirements of this section.

Seismic effects that shall be considered in the design of other electrical equipment include the dynamic effects of the equipment, its contents, and, when appropriate, its supports. The interaction between the equipment and the supporting *structures*, including other mechanical and electrical equipment, also shall be considered. When conduit, cable trays, or similar electrical distribution *components* are attached to *structures* that could displace relative to one another and for isolated *structures* where the conduit or cable trays cross the isolation interface, the conduit

or cable trays shall be designed to accommodate the seismic relative displacements specified in Sec. 6.1.4.

6.3.14.1 Electrical Equipment: Electrical equipment designed as having an I_p greater than 1.0 shall meet the following requirements:

a. Provisions shall be made to eliminate seismic impact between the equipment and other *components*.

b. The loading on the equipment imposed by attached utility or service lines that also are attached to separate *structures* shall be evaluated.

c. Batteries on racks shall have wrap-around restraints to ensure that the batteries will not fall off the rack. Spacers shall be used between restraints and cells to prevent damage to cases. Racks shall be evaluated for sufficient lateral load capacity.

d. Internal coils of dry type transformers shall be positively attached to their supporting substructure within the transformer enclosure

e. Slide out *components* in electrical control panels, computer equipment, etc., shall have a latching mechanism to hold contents in place.

f. Electrical cabinet design shall conform to the applicable National Electrical Manufacturers Association (NEMA) standards. Cut-outs in the lower shear panel that do not appear to have been made by the manufacturer and are judged to significantly reduce the strength of the cabinet shall be specifically evaluated.

g. The attachment of additional external items weighing more than 100 pounds (445 N) shall be specifically evaluated if not provided by the manufacturer.

6.3.14.2 Attachments and Supports for Electrical Equipment: Attachments and supports for electrical equipment shall meet the following requirements:

a. Attachments and supports transferring seismic loads shall be constructed of materials suitable for the application and designed and constructed in accordance with a nationally recognized structural standard specification such as, when constructed of steel, AISC LRFD and AISC and ASD.

b. Friction clips shall not be used for anchorage attachment.

c. Oversized plate washers extending to the equipment wall shall be used at bolted connections through the base sheet metal if the base is not reinforced with stiffeners or not judged capable of transferring the required loads.

d. Supports shall be specifically evaluated if weak-axis bending of light gage support steel is relied on for the seismic load path.

e. The supports for linear electrical equipment such as cable trays, conduit, and bus ducts shall be designed to meet the force and displacement requirements of Sec. 6.1.3 and 6.1.4 if any of the following situations apply:

(1) Supports are cantilevered up from the floor;

(2) Supports include bracing to limit deflection;

(3) Supports are constructed as rigid welded frames;

(4) Attachments into concrete utilize non-expanding insets, shot pins, or cast iron embedments;

(5) Attachments utilize spot welds, plug welds, or minimum size welds as defined by AISC.

f. *Components* mounted on vibration isolation systems shall have a bumper restraint or snubber in each horizontal direction, and vertical restraints shall be provided where required to resist overturning. Isolator housings and restraints shall not be constructed of cast iron or other materials with limited ductility. (See additional design force requirements in Table 6.3.2.) A viscoelastic pad or similar material or appropriate thickness shall be used between the bumper and equipment item to limit the impact load.

6.3.15 Alternate Seismic Qualification Methods: As an alternative to the analysis methods implicit in the design methodology described above, equipment testing is an acceptable method to determine seismic capacity. Thus, adaptation of a nationally recognized standard, such as CISCA Recs for Zones 3-4, is acceptable so long as the equipment seismic capacity equals or exceeds the demand expressed in Sec. 6.1.3 and 6.1.4.

6.3.16 Elevator Design Requirements: Elevators shall meet the force and displacement provisions of Sec. 6.3.2 unless exempted by either Sec. 1.2 or Sec. 6.1. Elevators designed in accordance with the seismic provisions of ASME A17.1 shall be deemed to meet the seismic force requirements of this section, except they also shall meet the additional requirements provided in Sec. 6.3.16.1 through 6.3.16.4.

6.3.16.1 Elevators and Hoistway Structural System: Elevators and hoistway structural systems shall be designed to meet the force and displacement provisions of Sec. 6.3.2.

6.3.16.2 Elevator Machinery and Controller Supports and Attachments: Elevator machinery and controller supports and attachments shall be designed to meet the force and displacement provisions of Sec. 6.3.2.

6.3.16.3 Seismic Controls: Seismic switches shall be provided for all elevators addressed by Sec. 6.3.16.1, including those meeting the requirements of ASME A17.1, provided they operate with a speed of 150 ft/min (46 m/min) or greater. Seismic switched shall provide an electrical signal indicating that structural motions are of such a magnitude that the operation of elevators may be impaired. Upon activism of the seismic switch, elevator operations shall conform the provisions of ASME A17.1 except as noted below. The seismic switch shall be located at or above the highest floor serviced by the elevator. The seismic switch shall have two horizontal perpendicular axes of sensitivity. Its trigger level shall be set to 30 percent of the acceleration of

gravity in facilities where the loss of the use of an elevator is a life-safety issue, the elevator may be used after the seismic switch has triggered provided that:

1. The elevator shall operate no faster than the service speed,
2. The elevator shall be operated remotely from top to bottom and back to top to verify that it is operable, and
3. The individual putting the elevator back in service should ride the elevator from top to bottom and back to top to verify acceptable performance.

6.3.16.4 Retainer Plates: Retainer plates are required at the top and bottom of the car and counterweight.

Chapter 7

FOUNDATION DESIGN REQUIREMENTS

7.1 GENERAL: This chapter includes only those foundation requirements that are specifically related to seismic resistant construction. It assumes compliance with all other basic requirements. These requirements include, but are not limited to, requirements for the extent of the foundation investigation, fills to be present or to be placed in the area of the *structure*, slope stability, subsurface drainage, and settlement control. Also included are pile requirements and capacities and bearing and lateral soil pressure recommendations. Except as specifically noted, where the term "pile" is used in Sec. 7.4.4 and 7.5.4, it shall include all foundation piers, caissons, and piles. The term "pile cap" shall include all elements to which piles are connected, including grade beams and mats.

7.2 STRENGTH OF COMPONENTS AND FOUNDATIONS: The resisting capacities of the foundations, subjected to the prescribed *seismic forces* of Chapters 1, 4 and 5, shall meet the requirements of this chapter.

7.2.1 Structural Materials: The *strength* of foundation *components* subjected to *seismic forces* alone or in combination with other prescribed loads and their detailing requirements shall conform to the requirements of Chapter 8, 9, 10, 11, or 12. The *strength* of foundation *components* shall not be less than that required for forces acting without *seismic forces*.

7.2.2 Soil Capacities: The capacity of the foundation soil in bearing or the capacity of the soil interface between pile, pier, or caisson and the soil shall be sufficient to support the *structure* with all prescribed loads, without *seismic forces*, taking due account of the settlement that the *structure* can withstand. For the load combination including earthquake as specified in Sec. 5.2.7, the soil capacities must be sufficient to resist loads at acceptable strains considering both the short duration of loading and the dynamic properties of the soil.

7.3 SEISMIC DESIGN CATEGORIES A AND B: Any construction meeting the requirements of Sec. 7.1 and 7.2 is permitted to be be used for *structures* assigned to *Seismic Design Category* A or B.

7.4 SEISMIC DESIGN CATEGORY C: Foundations for *structures* assigned to *Seismic Design Category* C shall conform to all of the requirements for *Seismic Design Categories* A and B and to the additional requirements of this section.

7.4.1 Investigation: The authority having jurisdiction may require the submission of a written report that shall include, in addition to the requirements of Sec. 7.1 and the evaluations required in Sec. 7.2.2, the results of an investigation to determine the potential hazards due to slope instability, liquefaction, and surface rupture due to faulting or lateral spreading, all as a result of earthquake motions.

7.4.2 Pole-Type Structures: Construction employing posts or poles as columns embedded in earth or embedded in concrete footings in the earth are permitted to be used to resist both axial and lateral loads. The depth of embedment required for posts or poles to resist *seismic forces* shall be determined by means of the design criteria established in the foundation investigation report.

7.4.3 Foundation Ties: Individual pile caps, drilled piers, or caissons shall be interconnected by ties. All ties shall be capable of carrying, in tension or compression, a force equal to the product of the larger pile cap or column load times S_{DS} divided by 10 unless it can be demonstrated that equivalent restraint can be provided by *reinforced concrete* beams within slabs on grade or *reinforced concrete* slabs on grade or confinement by competent rock, hard cohesive soils, very dense granular soils, or other approved means.

7.4.4 Special Pile Requirements: The following special requirements for piles, piers, or caissons are in addition to all other requirements in the code administered by the authority having jurisdiction.

All concrete piles and concrete filled pipe piles shall be connected to the pile cap by embedding the pile reinforcement in the pile cap for a distance equal to the development length as specified in ACI 318 as modified by Chapter 9 of the *Provisions*. The pile cap connection can be made by the use of field-placed dowel(s) anchored in the concrete pile. For deformed bars, the development length is the full development length for compression or tension, in the case of uplift, without reduction in length for excess area.

Ends of rectangular hoops, spirals, and ties in piles shall be terminated with seismic hooks as defined in Sec. 21.1 of ACI 318 turned into the confined concrete core. The ends of circular spirals and hoops shall be terminated with 90-degree hooks turned into the confined concrete core.

For resistance to uplift forces, anchorage of steel pipe (round HSS sections), concrete filled steel pipe or H piles to the pile cap shall be made by means other than concrete bond to the bare steel section.

> **Exception:** Anchorage of concrete filled steel pipe piles is permitted to be accomplished using deformed bars developed into the concrete portion of the pile.

Where a minimum length for reinforcement or the extent of closely spaced confinement reinforcement is specified at the top of the pile, provisions shall be made so that those specified lengths or extents are maintained after pile cut-off.

7.4.4.1 Uncased Concrete Piles: A minimum reinforcement ratio of 0.0025 shall be provided for uncased cast-in-place concrete drilled or augured piles, piers, or caissons in the top one-third of the pile length, a minimum length of 10 ft (3 m) below the ground, or throughout the flexural length of the pile, whichever length is greatest. There shall be a minimum of four bars with closed ties (or equivalent spirals) of a minimum of a 3/8 in. (9 mm) diameter provided at 16 longitudinal-bar-diameter maximum spacing. A maximum spacing of 6 in. (152mm) or eight longitudinal-bar-diameters, whichever is less, shall be provided in the pile within three pile diameters of the bottom of the pile cap.

7.4.4.2 Metal-Cased Concrete Piles: Reinforcement requirements are the same as for uncased concrete piles.

> **Exception:** Spiral welded metal-casing of a thickness not less than No. 14 gauge can be considered as providing concrete confinement equivalent to the closed ties or equivalent spirals required in an uncased concrete pile, provided that the metal casing is adequately protected against possible deleterious action due to soil constituents, changing water levels, or other factors indicated by boring records of site conditions.

7.4.4.3 Concrete-Filled Pipe: Minimum reinforcement 0.01 times the cross-sectional area of the pile concrete shall be provided in the top of the pile with a length equal to two times the required cap embedment anchorage into the pile cap.

7.4.4.4 Precast (non-prestressed) Concrete Piles: Longitudinal reinforcement shall be provided for precast concrete piles with a minimum steel ratio of 0.01. The longitudinal reinforcing shall be confined with closed ties or equivalent spirals of a minimum 3/8 in. (10mm) diameter. Transverse confinement reinforcing shall be provided at a maximum spacing of eight times the diameter of the smallest longitudinal bar, but not to exceed 6 inches (152 mm), within three pile diameters of the bottom of the pile cap. Outside of the confinement region, closed ties or equivalent spirals shall be provided at a 16 longitudinal-bar-diameter maximum spacing, but not greater than 8 in. (200 mm). Longitudinal reinforcement shall be full length.

7.4.4.5 Precast-Prestressed Piles: The minimum volumetric ratio of spiral reinforcement shall not be less than 0.007 or the amount required by the following formula for the upper 20 ft (6 m)of the pile:

$$\rho_s = \frac{0.12 f'_c}{f_{yh}} \qquad (7.4.4.5\text{-}1)$$

where:

ρ_s = spiral reinforcement index (vol. spiral/ vol. core)

f_c' = specified compressive strength of concrete, psi (Mpa), and

f_{yh} = yield strength of spiral reinforcement, which shall not be taken greater than 85,000 psi (586 MPa).

Below the 20 ft (6 m) length, provide at least one-half the volumetric ratio provided by Eq, 7.4.4.5-1.

7.5 SEISMIC DESIGN CATEGORIES D, E, AND F: Foundations for *structures* assigned to *Seismic Design Categories* D, E, and F shall conform to all of the requirements for *Seismic Design Category* C construction and to the additional requirements of this section. Design and construction of concrete foundation *component*s shall conform with the requirements of ACI 318, Sec. 21.8, except as modified by the requirements of this section.

Exception: Detached one and two family dwellings of light frame construction not exceeding two stories in height above grade need only comply with the requirements of Sec.7.4 and Sec. 7.5.3.

7.5.1 Investigation: The *owner* shall submit to the authority having jurisdiction a written report that includes an evaluation of potential site hazards such as slope instability, liquefaction, and surface rupture due to faulting or lateral spreading and the determination of lateral pressures on *basement* and retaining *walls* due to earthquake motions.

7.5.2 Foundation Ties: Individual spread footings founded on soil defined in Sec. 4.1.2 as *Site Class* E or F shall be interconnected by ties. Ties shall conform to Sec. 7.4.3.

7.5.3 Liquefaction Potential and Soil Strength Loss: The geotechnical report shall assess potential consequences of any liquefaction and soil *strength* loss, including estimation of differential settlement, lateral movement or reduction in foundation soil-bearing capacity, and shall discuss mitigation measures. Such measures shall be given consideration in the design of the *structure* and can include, but are not limited to, ground stabilization, selection of appropriate foundation type and depths, selection of appropriate structural systems to accommodate anticipated displacements, or any combination of these measures.

The potential for liquefaction and soil *strength* loss shall be evaluated for site peak ground accelerations, magnitudes, and source characteristics consistent with the *design earthquake* ground motions. Peak ground acceleration is permitted to be determined based on a site-specific study taking into account soil amplification effects or, in the absence of such a study, peak ground accelerations shall be assumed equal to $S_{DS}/2.5$.

7.5.4 Special Pile and Grade Beam Requirements: Piling shall be designed and constructed to withstand maximum imposed curvatures from earthquake ground motions and *structure* response. Curvatures shall include free-field soil strains (without the *structure*) modified for soil-pile interaction coupled with pile deformations induced by lateral pile resistance to *structure seismic forces*. Concrete piles in *Site Class* E or F shall be designed and detailed in accordance with Sec. 21.4.4.1, 21.4.4.2, and 21.4.4.3 of ACI 318 within seven pile diameters of the pile cap and the interfaces of soft to medium stiff clay or liquefiable strata. For precast prestressed concrete piles, detailing provisions as given in Sec. 7.5.4.4 shall apply.

Section 21.8.3.3 of ACI 318 need not apply when grade beams have the required strength to resist the forces from the load combinations of Section 5.2.7.1. Section 21.8.4.4(a) of ACI 318 need not apply to concrete piles. Section 21.8.4.4(b) of ACI 318 need not apply to precast prestressed concrete piles.

Design of anchorage of piles into the pile cap shall consider the combined effect of axial forces due to uplift and bending moments due to fixity to the pile cap. For piles required to resist uplift forces or provide rotational restraint, anchorage into the pile cap shall be capable of developing the following:

1. In the case of uplift, the lesser of the nominal tensile strength of the longitudinal reinforcement in a concrete pile, or the nominal tensile strength of a steel pile, or the pile uplift soil nominal strength factored by 1.3, or the axial tension force resulting from the load combinations of Sec. 5.2.7.1.

2. In the case of rotational restraint, the lesser of the axial and shear forces, and moments resulting from the load combinations of Section 5.2.7.1 or development of the full axial, bending, and shear nominal strength of the pile.

Splices of pile segments shall develop the nominal strength of the pile section, but the splice need not develop the nominal strength of the pile in tension, shear, and bending when it has been designed to resist axial and shear forces, and moments from the load combinations of Sec. 5.2.7.1.

Pile moments, shears, and lateral deflections used for design shall be established considering the interaction of the shaft and soil. Where the ratio of the depth of embedment of the pile-to-the-pile diameter or width is less than or equal to 6, the pile may be assumed to be rigid with respect to the soil.

Pile group effects from soil on lateral pile nominal strength shall be included where pile center-to-center spacing in the direction of the lateral force is less than eight pile diameters. Pile group effects on vertical nominal strength shall be included where pile center-to-center spacing is less than three pile diameters. The pile uplift soil nominal strength shall be taken as the pile uplift strength as limited by the frictional force developed between the soil and the pile.

The connection between batter piles and grade beams or pile caps shall be designed to resist the full strength of the pile acting as a short column. Batter piles shall be capable of resisting forces and moments from the load combinations of Sec. 5.2.7.1.

7.5.4.1 Uncased Concrete Piles: A minimum longitudinal reinforcement ratio of 0.005 shall be provided for uncased cast-in-place drilled or augured concrete piles, piers, or caissons in the top one-half of the pile length, a minimum length of 10 ft (3 m) below ground, or throughout the flexural length of the pile, whichever length is greatest. The flexural length shall be taken as the length of pile to a point where the concrete section cracking moment multiplied by the resistance factor 0.4 exceeds the required factored moment at that point. There shall be a minimum of four longitudinal bars with transverse confinement reinforcing provided in the pile in accordance with Sec. 21.4.4.1, 21.4.4.2, and 21.4.4.3 of ACI 318 within three pile diameters of the bottom of the pile cap.

It shall be permitted to use a transverse spiral reinforcing ratio of not less than one-half of that required in Sec. 21.4.4.1(a) of ACI 318 for other than Class E, F, or liquefiable sites. Tie spacing of longitudinal bars throughout the remainder of the pile length shall not exceed 12 longitudinal bar diameters, one-half the diameter of the section, or 12 inches (305 mm). Ties shall be a minimum of No. 3 bars for up to 20-in.-diameter (500 mm) piles and No. 4 bars for piles of larger diameter.

7.5.4.2 Metal-Cased Concrete Piles: Reinforcement requirements are the same as for uncased concrete piles.

> **Exception:** Spiral welded metal-casing of a thickness not less than No. 14 gauge can be considered as providing concrete confinement equivalent to the closed ties or equivalent spirals required in an uncased concrete pile, provided that the metal casing is adequately protected against possible deleterious action due to soil constituents, changing water levels, or other factors indicated by boring records of site conditions.

7.5.4.3 Precast (non-prestressed) Concrete Piles: Transverse confinement reinforcing of closed ties or equivalent spirals shall be provided in accordance with Sec. 21.4.4.1, 21.4.4.2, and 21.4.4.3 of ACI 318 within three pile diameters of the bottom of the pile cap. It shall be permitted to use a transverse spiral reinforcing ratio of not less than one-half of that required in Sec. 21.4.4.1(a) of ACI 318 for other than Class E, F, or liquefiable sites.

7.5.4.4 Precast-Prestressed Piles: The requirements of ACI 318 need not apply unless specifically referenced.

Where the total pile length in the soil is 35 ft (10.7 m) or less, transverse confinement reinforcement shall be provided throughout the length of the pile. Where the pile length exceeds 35 ft (10.7 m), transverse confinement reinforcement shall be provided for the greater of 35 ft (10.7 m) or the distance from the underside of the pile cap to the point of zero curvature plus three times the least pile dimension.

The transverse confinement reinforcement shall be spiral or hoop reinforcement with a center-to-center spacing not greater than one-fifth of the least pile dimension, six times the diameter of the longitudinal tendons, or 8 in. (203mm), whichever is smaller.

Circular spiral reinforcement shall be spliced by lapping one full turn and bending the end of the spiral to a 90-degree hook or by use of a mechanical or welded splice complying with Sec. 12.14.3 of ACI 318. Where the transverse confinement reinforcement consists of circular spirals, the volumetric ratio of spiral transverse reinforcement shall comply with:

$$\rho_s = 0.25\left(\frac{f_c'}{f_{yh}}\right)\left(\frac{A_g}{A_{ch}} - 1.0\right)\left(0.5 + \frac{1.4P}{f_c' A_g}\right) \qquad (7.5.4.4\text{-}1)$$

but not less than

$$\rho_s = 0.12\left(\frac{f'_c}{f_{yh}}\right)\left(0.5 + \frac{1.4P}{f'_c A_g}\right) \qquad (7.5.4.4\text{-}2)$$

and need not exceed $\rho_s =$ 0.021 where:

ρ_s = spiral reinforcement index (vol. spiral/ vol. core),

f_c' = specified compressive strength of concrete, psi (MPa),

f_{yh} = yield strength of spiral reinforcement, which shall not be taken as greater than 85,000 psi (586 MPa),

A_g = pile cross-sectional area,

A_{ch} = core area defined by spiral outside diameter, and

P = axial load on pile resulting from the load combinations of Sec. 5.2.7

The required amount of spiral reinforcement shall be permitted to be obtained by providing an inner and outer spiral.

When transverse confinement reinforcement consists of rectangular hoops and cross ties, the total cross-sectional area of lateral transverse reinforcement in the ductile region with spacing s and perpendicular to dimension h_c shall conform to:

$$A_{sh} = 0.12\, sh_c \left(\frac{f'_c}{f_{yh}} \right) \left(\frac{A_g}{A_{ch}} - 1 \right) \left(0.5 + \frac{1.4P}{f'_c A_g} \right) \qquad (7.5.4.4\text{-}3)$$

but not less than

$$A_{sh} = 0.12\, sh_c \left(\frac{f'_c}{f_{yh}} \right) \left(0.5 + \frac{1.4P}{f'_c A_g} \right) \qquad (7.5.4.4\text{-}4)$$

where

s = spacing of transverse reinforcement measured along length of pile,

h_c = cross-sectional dimension of pile core measured center to center of hoop reinforcement,

f_c' = specified compressive strength of concrete, psi (Mpa), and

f_{yh} = yield strength of transverse confinement reinforcement which shall not be taken as greater than 70,000 psi (483 MPa).

The hoops and cross ties shall be equivalent to deformed bars not less than No.3 in size. Rectangular hoop ends shall terminate at a corner with seismic hooks.

Outside of the length of the pile requiring transverse confinement reinforcing, the spiral or hoop reinforcing with a volumetric ratio not less than one-half of that required for transverse confinement reinforcing shall be provided.

7.5.4.5 Steel Piles: The connection between the pile cap and steel piles or unfilled steel pipe piles shall be designed for a tensile force no less than 10 percent of the pile compression capacity.

> **Exception:** The pile connection need not meet this requirement where it can be demonstrated that the pile connection has the strength to resist the axial forces and moments resulting from the load combinations of Sec. 5.2.7.1.

Chapter 8

STEEL STRUCTURE DESIGN REQUIREMENTS

8.1 REFERENCE DOCUMENTS: The design, construction, and quality of steel *components* that resist *seismic forces* shall conform to the requirements of the references listed in this section except as modified by the requirements of this chapter.

AISC LRFD	American Institute of Steel Construction (AISC), *Load and Resistance Factor Design Specification for Structural Steel Buildings (LRFD)*, December 1993.
AISC ASD	American Institute of Steel Construction (AISC), *Allowable Stress Design and Plastic Design Specification for Structural Steel Buildings (ASD)*, June 1, 1989.
AISC Seismic	American Institute of Steel Construction (AISC)., *Seismic Provisions for Structural Steel Buildings* (1997), Part I, including Supplement No. 2 (November 2000).
AISI	American Iron and Steel Institute (AISI), *Specification for the Design of Cold-Formed Steel Structural Members*, 1996.
ANSI/ASCE 8-90	American Society of Civil Engineers, *Specification for the Design of Cold--formed Stainless Steel Structural Members*, ANSI/ASCE 8-90, 1990.
SJI	Steel Joist Institute, *Standard Specification, Load Tables and Weight Tables for Steel Joists and Joist Girders*, 1994.
ASCE 19	American Society of Civil Engineers (ASCE), *Structural Applications for Steel Cables for Buildings*, ASCE 19, 1995.

8.2 SEISMIC REQUIREMENTS FOR STEEL STRUCTURES: The design of steel *structures* to resist *seismic forces* shall be in accordance with Sec. 8.3 or 8.4 for the appropriate *Seismic Design Category*.

8.3 SEISMIC DESIGN CATEGORIES A, B, and C: Steel *structures* assigned to *Seismic Design Categories* A, B, and C shall be of any construction permitted by the references in Sec. 8.1. An *R* factor as set forth in Table 5.2.2 for the appropriate steel system is permitted when the *structure* is designed and detailed in accordance with the requirements of AISC Seismic, Part I, or Sec. 8.6 for light framed cold-formed steel wall systems. Systems not detailed in accordance with the above shall use the *R* factor in Table 5.2.2 designated for "steel systems not detailed for seismic."

8.4 SEISMIC DESIGN CATEGORIES D, E, AND F: Steel *structures* assigned to *Seismic Design Categories* D, E, and F shall be designed and detailed in accordance with AISC Seismic,

except as modified by other provisions in this section. Light framed cold-formed steel wall systems shall be designed and detailed in accordance with Sec. 8.6.

8.4.1 Modifications to AISC Seismic:

8.4.1.1: Revise Sec. 7.3b as follows: After the words "Charpy V-Notch toughness of 20 ft-lbs at 0° F, as determined by AWS classification or manufacturer certification" add the following: "For structures in which the steel frame is normally enclosed and maintained at a temperature of 50°F or higher, critical welded joints in seismic-force-resisting systems, including CJP welds of beam flanges to column flanges, CJP welds of shear tabs and beam webs to column flanges, column splices, and similar joints shall be made with weld filler metal capable of producing welds with minimum Charpy V-Notch toughness of 40 ft-lbs at 70°F and 20 ft-lbs at -20°F, under a range of welding conditions in accordance with FEMA 353, *Recommended Specifications and Quality Assurance Guidelines for Moment Resisting Steel Frames for Seismic Applications*. For structures with service temperatures lower than 50°F, the Charpy V-notch toughness shall be a minimum of 40 ft-lbs at 20° F above the lowest anticipated service temperature."

8.4.1.2: Revise Sec. 9.2c and 10.2b.3 as follows: After the words "in the opposite sense on each end of the beam" add the words "segment between the plastic hinge points." Delete the words "The required shear strength need not exceed the shear resulting from load combination 4-1."

8.4.1.3: Revise Sec. 11.2a1 by adding the following exception:

> **Exception:** Where weld access holes are provided, they shall conform to Figure X.

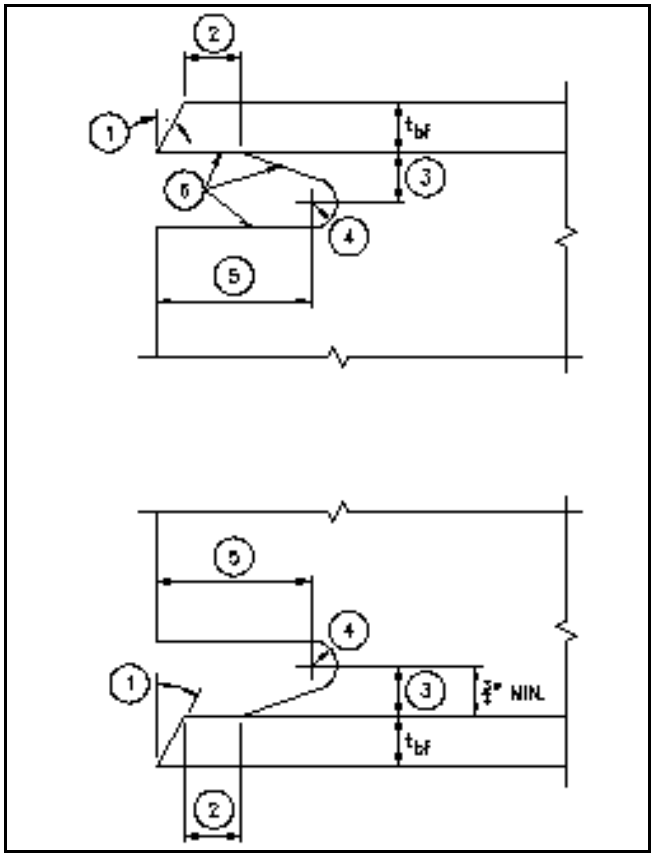

FIGURE X Legend: (1) bevel as required by AWS D1.1for selected groove weld procedure; (2) larger t_{bf} or 1/2 inch; (3) t_{bf} to t_{bf} with a 3/4 inch minimum; (4) 3/8 inch minimum radius; (5) 3 t_{bf} , (6) surfaces to 500 microinches roughness.

8.5 COLD-FORMED STEEL SEISMIC REQUIREMENTS: The design of cold-formed carbon or low-alloy steel members to resist seismic loads shall be in accordance with the requirements of AISI and the design of cold-formed stainless steel structural l to resist seismic loads shall be in accordance with the requirements of ANSI/ASCE 8-90, except as modified by this section. The reference to section and paragraph numbers are to those of the particular specification modified.

8.5.1 Modifications to AISI: Revise Sec. A5.1.3 of AISI as follows:

> "**A4.4 Wind or Earthquake Loads** Where load combinations specified by the applicable code include wind loads, the resulting forces are permitted to be multiplied by 0.75. Seismic load combinations shall be as determined by these provisions."

8.5.2 Modifications to ANSI/ASCE 8-90: Modify Sec. 1.5.2 of ANSI/ASCE 8-90 by substituting a load factor of 1.0 in place of 1.5 for nominal earthquake load.

8.6 LIGHT-FRAMED WALLS: When required by the requirements in Sec. 8.3 or 8.4, cold-formed steel stud *walls* designed in accordance with AISI and ANSI/ASCE 8-90 shall also comply with the requirements of this section.

8.6.1 Boundary Members: All boundary members, chords, and collectors shall be designed to transmit the specified induced axial forces.

8.6.2 Connections: Connections for diagonal bracing members, top chord splices, boundary members, and collectors shall have a *design strength* equal to or greater than the *nominal* tensile *strength* of the members being connected or Ω_0 times the design *seismic force*. The pull-out resistance of screws shall not be used to resist *seismic forces*.

8.6.3 Braced Bay Members: In stud systems where the lateral forces are resisted by braced frames, the vertical and diagonal members in braced bays shall be anchored such that the bottom tracks are not required to resist uplift forces by bending of the track or track web. Both flanges of studs shall be braced to prevent lateral torsional buckling. In vertical *diaphragm* systems, the vertical boundary members shall be anchored so the bottom track is not required to resist uplift forces by bending of the track web.

8.6.4 Diagonal Braces: Provision shall be made for pretensioning or other methods of installation of tension-only bracing to guard against loose diagonal straps.

8.6.5 Shear Walls: Nominal shear values for *wall* sheathing materials are given in Table 8.6.5. Design shear values shall be determined by multiplying the nominal values therein by a ϕ factor of 0.55. In *structures* over one *story* in height, the assemblies in Table 8.6.5 shall not be used to resist horizontal loads contributed by forces imposed by masonry or concrete construction.

Panel thicknesses shown in Table 8.6.5 shall be considered to be minimums. No panels less than 24 inches wide shall be used. Plywood or oriented strand board (OSB) structural panels shall be of a type that is manufactured using exterior glue. Framing members, blocking, or strapping shall be provided at the edges of all sheets. Fasteners along the edges in *shear panels* shall be placed not less than 3/8 in. (9.5 mm) in from panel edges. Screws shall be of sufficient length to ensure penetration into the steel stud by at least two full diameter threads.

The height to length ratio of *wall* systems listed in Table 8.6.5 shall not exceed 2:1.

Perimeter members at openings shall be provided and shall be detailed to distribute the shearing stresses. Wood sheathing shall not be used to splice these members.

Wall studs and track shall have a minimum uncoated base thickness of not less than 0.033 in. (0.84 mm) and shall not have an uncoated base metal thickness greater than 0.048 in. (1.22 mm). Panel end studs and their uplift anchorage shall have the *design strength* to resist the forces determined by the seismic loads determined by Eq. 2.2.6-3 and Eq. 2.2.6-4.

TABLE 8.6.5 Nominal Shear Values for Seismic Forces for Shear Walls Framed with Cold-Formed Steel Studs (in pounds per foot)[a, b]

Assembly Description	Fastener Spacing at Panel Edges [c] (inches)	Framing Spacing (inches o.c.)

	6	**4**	**3**	**2**	
15/32 rated Structural I sheathing (4-ply) plywood one side [d]	780	990	1465	1625	24
7/16 in. oriented strand board one side [d]	700	915	1275	1700	24

NOTE: For fastener and framing spacing, multiply inches by 25.4 to obtain metric mm.

[a] Nominal shear values shall be multiplied by the appropriate strength reduction factor ϕ to determine *design strength* as set forth in Sec. 8.6.5.

[b] Studs shall be a minimum 1-5/8 in. by 3-1/2 in. with a 3/8-in. return lip. Track shall be a minimum 1-1/4 in. by 3-1/2 in. Both studs and track shall have a minimum uncoated base metal thickness of 0.033 in. and shall be ASTM A446 Grade A (or ASTM A653 SQ Grade 33 [new designation]). Framing screws shall be No. 8 x 5/8 in. wafer head self-drilling. Plywood and OSB screws shall be a minimum No. 8 x 1 in. bugle head. Where horizontal straps are used to provide blocking, they shall be a minimum 1-1/2 in. wide and of the same material and thickness as the stud and track.

[c] Screws in the field of the panel shall be installed 12 in. o.c. unless otherwise shown.

[d] Both flanges of the studs shall be braced in accordance with Sec. 8.6.3.

8.7 SEISMIC REQUIREMENTS FOR STEEL DECK DIAPHRAGMS: Steel deck *diaphragms* shall be made from materials conforming to the requirements of AISI and ANSI/ASCE 8-90. *Nominal strengths* shall be determined in accordance with approved analytical procedures or with test procedures prepared by a *registered design professional* experienced in testing of cold-formed steel assemblies and approved by the authority having jurisdiction. *Design strengths* shall be determined by multiplying the *nominal strength* by a resistance factor, ϕ, equal to 0.60 for mechanically connected *diaphragms* and equal to 0.50 for welded *diaphragms*. The steel deck installation for the *structure*, including fasteners, shall comply with the test assembly arrangement. Quality standards established for the nominal strength test shall be the minimum standards required for the steel deck installation, including fasteners.

8.8 STEEL CABLES: The *design strength* of steel cables shall be determined by the requirements of ASCE 19 except as modified by the *Provisions*. Sec. 5d of ASCE 19 shall be modified by substituting 1.5(T_4) where T_4 is the net tension in cable due to *dead load*, prestress, *live load*, and seismic load. A load factor of 1.1 shall be applied to the prestress force to be added to the load combination of Sec. 3.1.2 of ASCE 19.

Chapter 9

CONCRETE STRUCTURE DESIGN REQUIREMENTS

9.1 REFERENCE DOCUMENTS: The quality and testing of concrete and steel materials and the design and construction of concrete *components* that resist *seismic forces* shall conform to the requirements of the reference listed in this section except as modified by the requirements of this chapter.

ACI 318	American Concrete Institute (ACI), *Building Code Requirements for Structural Concrete*, excluding Appendix A, ACI 318, 1999.
ACI ITG/T1.1	American Concrete Institute (ACI), *Acceptance Criteria for Moment Frames Based on Structural Testing (An ACI Provisional Standard)*, 1999.
ASME B1.1	American Society of Mechanical Engineers (ASME), *Unified Inch Screw Threads UN and UNR Thread Form*, ASME B1.13, 1989.
ASME B18.2.1	American Society of Mechanical Engineers (ASME), *Square and Hex Bolts and Screws, Inch Series*, ASME B18.2.1, 1996
ASME B18.2.6.9	American Society of Mechanical Engineers (ASME),
ATC-24	Applied Technology Council (ATC), *Guidelines for Seismic Testing of Components of Steel Structures*, ATC-24, 1992

9.1.1 Modifications to ACI 318:

9.1.1.1: Insert the following notations in Sec. 21.0:

A_b	=	the area of the shank of the bolt or stud (in.^{2} or mm^2)
b_d	=	diaphragm width (ft)
c_u'	=	neutral axis depth at P_u' and M_n'.
ℓ_p	=	height of the plastic hinge above critical section; shall be established on the basis of substantiated test data or may be alternatively taken at $0.5\ell_w$.
P_u'	=	$1.2D + 0.5L + E$.
h	=	overall dimension of member in the direction of action considered.
h_s	=	story height (ft)
L_{eff}	=	length of diaphragm between inflection points (ft)
$S_{c\ Connection}$	=	*nominal strength* of connection cross section in flexural, shear, or axial load per Sec. 21.2.7.3.

$S_{e\ Connection}$ = moment, shear, or axial force at strong connection cross section corresponding to probable *strength* at the nonlinear action location, taking *gravity load* effects into consideration per Sec. 21.2.8.3.

$S_{n\ Connection}$ = *nominal strength* of connection cross section in flexural, shear, or axial load per Sec. 21.2.7.3.

S_{pr} = probable *strength* of connection cross section in flexural, shear, or axial load. See Sec. 21.11.5.

S_y = yield strength of connection cross section in flexural, shear, or axial load action as determined from physical experiments on the connection or the use of analytical models for the response of the connection that are based on the results of physical experiments on connections with characteristics similar to those being modeled. See Sec. 21.11.5.

Δ_E = elastic *design displacement* at the top of the wall using gross section properties and code-specified *seismic forces*.

Δ_i = inelastic deflection at top of wall = $\Delta_t - \Delta_y$.

Δ_m = $C_d\Delta_s$.

Δ_s = *design* level response *displacement*, which is the total drift or total *story* drift that occurs when the *structure* is subjected to the design *seismic forces*.

Δ_t = total deflection at the top of the wall equal to C_d times the elastic *design displacement* using cracked section properties or may be taken as $(I_g/I_{eff})C_d\Delta_E$. I_g is the gross moment of inertia of the wall and I_{eff} is the effective moment of inertia in the wall. I_{eff} may be taken as $0.5I_g$.

Δ_y = *displacement* at the top of the wall corresponding to yielding of the tension reinforcement at critical section or may be taken as $(M_n'/M_E)\Delta_E$ where M_E equals moment at critical section when top of wall is displaced Δ_E. M_n' is nominal flexural *strength* of critical section at P_u'.

ϕ_y = yield curvature which may be estimated as $0.003/\ell_w$.

ψ = dynamic amplification factor from Sec. 21.2.8.3 and 21.2.8.4.

9.1.1.2: Insert the following definitions in Sec. 21.1:

Anchorage – The means by which, for precast construction, the force in the connection is transferred into the precast or cast-in-place member.

Connection – An element that joins two precast members or a precast member and a cast-in-place member.

Connection Region – The portion of the precast or cast-in-place member through which the concentrated forces from the connection and anchorage are transferred to the concrete. Its extent from the connection is the distance for the forces to be distributed over the cross section and shall be permitted to not exceed the largest dimension of that cross section.

Design Displacement – Design story drift as specified in Sec. 5.2.2.4.3 of the 2000 *NEHRP Recommended Provisions*.

Design Load Combinations – Combinations of factored loads and forces specified in Sec. 5.2.7 of the the 2000 *NEHRP Recommended Provisions*.

Dry Connection – Connection used between precast members which does not qualify as a wet connection.

Joint – The geometric volume common to intersecting members.

Moment Frame

> **Special moment frame** – A cast-in-place frame complying with the requirements of Sec. 21.2 through 21.5 in addition to the requirements for ordinary moment frames or a precast concrete frame complying with the requirements for a cast-in-place frame and Sec. 21.11.
>
> **Nonlinear Action Location** – Center of the region of yielding in flexure, shear, or axial action.

Nonlinear Action Region – The member length over which nonlinear action takes place. It shall be taken as extending a distance of no less than $h/2$ on either side of the nonlinear action location.

Strong Connection – A connection that remains elastic while the designated nonlinear action regions undergo inelastic response under the design basis ground motion.

Structural Walls

> **Ordinary precast concrete structural wall** – A wall incorporating precast concrete elements and complying with the requirements of Chapters 1 through 18 with the requirements of Chapter 16 superseding those of Chapter 14. Where connections between wall panels are required or anchorage of wall panels to foundations is required for resistance to overturning, Type Y or Type Z connections shall be provided as required by Sec. 21.11.6.
>
> **Special precast concrete structural wall** – A wall complying with the requirements of Sec. 21.11 in addition to the requirements for ordinary reinforced concrete structural walls.

Wall Pier – A wall segment with a horizontal length-to-thickness ratio of at least 2.5, but not exceeding 6, whose clear height is at least two times its horizontal length.

Wet Connection – A connection that uses any of the splicing methods permitted by Sec. 21.3.2.3 or 21.3.2.4 to connect precast members and uses cast-in-place concrete or grout to fill the splicing closure.

Wet Connection – A connection in precast construction that uses any of the splicing methods permitted by Sec. 21.2.6, 21.2.7, or 21.3.2.3 to connect precast members and uses cast-in-place concrete or grout to fill the splicing closure.

9.1.1.3: Revise Sec. 21.2.1.2, 21.2.1.3, and 21.2.1.4 as follows:

> "**21.2.1.2** For *structures* assigned to *Seismic Design Categories* A and B, provisions of Chapters 1 through 18 and 22 shall apply except as modified by the requirements of

Chapter 9 of the 2000 *NEHRP Recommended Provisions*. Where the seismic design loads are computed using provisions for intermediate or special concrete systems, the requirements of Chapter 21 for intermediate or special systems, as applicable, shall be satisfied.

"**21.2.1.3** For *structures* assigned to *Seismic Design Category* C, intermediate or special moment frames or ordinary or special reinforced concrete structural walls shall be used to resist seismic forces induced by earthquake motions. Where the design seismic loads are computed using the provisions for special concrete systems, the requirements of Chapter 21 for special systems, as applicable, shall be satisfied.

"**21.2.1.4** For *structures* assigned to *Seismic Design Categories* D, E and F, special moment frames, special reinforced concrete structural walls, diaphragms and trusses, and foundations complying with Sec. 21.2 through 21.8 and 21.11 shall be used to resist forces induced by earthquake motions. Frame members not proportioned to resist earthquake forces shall comply with Sec. 21.9."

9.1.1.4: Insert the following new Sec. 21.2.1.6 and 21.2.1.7:

21.2.1.6 Precast concrete *seismic-force-resisting systems* used in regions of high seismic risk or for *structures* assigned to high seismic performance or design categories shall satisfy the requirements of Sec. 21.11 in addition to the requirements of Sec. 21.2 through 21.9.

"**21.2.1.7** In *structures* having precast *gravity load*-carrying systems, the *seismic-force-resisting system* shall be one of the systems listed in Table 5.2.2 of the 2000 *NEHRP Recommended Provisions* and shall be well distributed using one of the following methods:

"1. The diaphragm or diaphragm segment between *seismic-force-resisting systems* shall be designed to resist a force not less than Ω_0 times the force determined in accordance with Sec. 5.2.5.4 of the 2000 *NEHRP Recommended Provisions*. The chord force determined in accordance with Sec. 21.7.8.1 of ACI 318 shall be increased by a factor equal to:

$$b_d \frac{\left[1 + 0.4\left(\frac{L_{eff}}{b_d}\right)^2\right]}{12h_s}$$

but not less than unity where:

L_{eff} = length of diaphragm between inflection points, ft,

h_s = story height, ft, and

b_d = diaphragm width, ft

"Where the *seismic-force-resisting system* consists of moment resisting frames, at least (N_b/4) + 1 of the bays (rounded up to the nearest integer) along any frame line at any story shall be part of the *seismic-force-resisting system* where N_b is the total number of bays along that line at that story. This requirement applies to only the lower two thirds of the stories of buildings three stories or taller.

"2. All beam-to-column connections that are not part of the *seismic-force-resisting system* shall be designed in accordance with the following:

"**Connection Design Force.** The connection shall be designed to develop *strength M*. *M* is the moment developed at the connection when the frame is displaced by Δ_s assuming fixity at the connection and a beam flexural stiffness of no less than one half of the gross section of stiffness. *M* shall be sustained through a deformation of Δ_m.

"**Connection Characteristics.** The connection shall be permitted to resist moment in one direction only, positive or negative. The connection at the opposite end of the member shall resist moment with the same positive or negative sign. The connection shall be permitted to have zero flexural stiffness up to a frame displacement of Δ_m.

"In addition, complete calculations for the deformation compatibility of the gravity load carrying system shall be made in accordance with Sec. 5.2.2.4.3 of the 2000 NEHRP *Recommended Provisions* using cracked section stiffness in the *seismic-force-resisting system* and the *diaphragm.*

"Where gravity columns are not provided with lateral support on all sides, a positive connection shall be provided along each unsupported direction parallel to a principal plan axis of the structure. The connection shall be designed for a horizontal force equal to 4 percent of the axial load *strength*, P_o, of the column.

"The bearing length shall be calculated to include end rotation, sliding, and other movements of precast ends at supports due to earthquake motions in addition to other movements and shall be at least 2 inches more than that required for bearing *strength*."

9.1.1.5: Change Sec. 21.2.5.1 as follows and insert the following new Sec. 21.2.5.2 and 21.2.5.3.

"**21.2.5.1** Except as permitted in 21.2.5.2 and 21.2.5.3, reinforcement resisting earthquake-induced flexural and axial forces in the frame members and in wall *boundary elements* shall comply with a ASTM A 706. ASTM A 615 Grades 40 and 60 reinforcement shall be permitted if (a) the actual yield strength based on mill tests does not exceed the specified yield *strength* by more than 18,000 psi (retests shall not exceed this value by more than an additional 3000 psi) and (b) the ratio of the actual ultimate tensile *strength* to the actual tensile yield *strength* is not less than 1.25.

"**21.2.5.2** Prestressing tendons shall be permitted in the flexural members of frames provided the average prestress, f_{pc}, calculated for an area equal to the member's shortest cross-sectional dimension multiplied by the perpendicular dimension shall not exceed the lesser of 700 psi or $f'_c/6$ at locations of nonlinear action where prestressing tendons are used in members of frames.

"**21.2.5.3** Unless the seismic-force-resisting frame is qualified for use through structural testing as required by 21.8.3.1, for members in which prestressing tendons are used together with mild steel reinforcement to resist earthquake-induced forces, prestressing tendons shall not provide more than one quarter of the strength for either positive or negative moment at the nonlinear action and be anchored at the exterior face of the joint or beyond.

"**21.2.5.4** Anchorages for tendons shall be demonstrated to perform satisfactorily for seismic loadings. Anchorage assemblies shall withstand, without failure, a minimum of 50 cycles of loading between 40 and 85 percent of the minimum tensile strength of the prestressing steel.

9.1.1.6: Add the following new Sec. 21.4.5.3:

"**21.4.5.3** At any section where the design strength, ϕP_n, of the column is less than the sum of the shear V_e computed in accordance with 21.4.5.1 for all the beams framing into the column above the level under consideration, special transverse reinforcement shall be provided. For beams framing into opposite sides of the column, the moment *components* may be assumed to be of opposite sign. For determination of the *nominal strength*, P_n, of the column, these moments may be assumed to result from the *deformation* of the frame in any one principal axis."

9.1.1.7: In Sec. 21.6.3, change "factored load combinations" to "design load combinations."

9.1.1.8: Modify Sec. 21.6 by adding a new Sec. 21.6.10 to read as follows:

"21.6.10 Wall Piers and Wall Segments

"21.6.10.1 Wall piers not designed as part of a special moment frame shall have transverse reinforcement designed to satisfy the requirements of Sec. 21.6.10.2

"Exceptions:

"1. Wall piers that satisfy Sec. 21.9.

"2. Wall piers along a wall line within a story where other shear wall segments provide lateral support to the wall piers and such segments have a total stiffness of at least six times the sum of the stiffness of all the wall piers.

"**21.6.10.2** Transverse reinforcement shall be designed to resist the shear forces determined from Sec. 21.4.5.1 and 21.3.4.2. Where the axial compressive force, including earthquake effects , is less than $A_s f_c'/20$, transverse reinforcement in wall piers is permitted to have standard hooks at each free end and in lieu of hoops. Spacing of transverse reinforcement shall not exceed 6 inches (152 mm). Transverse reinforcement shall be extended beyond the pier clear height for at least the development length of the largest longitudinal reinforcement in the wall pier."

9.1.1.9: Change Sec. 21.8.1.1 to read as follows:

"**21.8.1.1** Foundations resisting earthquake-induced forces or transferring earthquake-induced forces between structure and ground shall comply with requirements of Sec. 21.8 and other applicable code provisions unless modified by Chapter 7 of the 2000 *NEHRP Recommended Provisions.*

9.1.1.10: Revise Sec. 21.9.3.3 to read as follows:

"**21.9.23.3** Members with factored gravity axial force exceeding $A_g f_c'/10$ shall satisfy Sec. 21.4.3.1, 21.4.4, 21.4.5, and 21.5.2.1. The maximum longitudinal spacing of ties shall be s_o for the full column height. The spacing, s_o, shall not be more than six diameters of the smallest longitudinal bar enclosed or 6 in. (152 mm), whichever is smaller. Lap splices of longitudinal reinforcement in such members need not satisfy Sec. 21.4.3.2 in structures where the seismic-force-resisting system does not include special moment frames."

9.1.1.11: Insert in Sec. 21.10 the following new Sec. 21.10.7:

"21.10.7 Precast concrete moment frames. For structure assigned to *Seismic Design Category* C, precast concrete seismic-force-resisting frames shall be permitted provided the frame conforms to 21.10.1 through 21.10.5 and Type Y or Type Z connections as defined in 21.11.5 are used."

9.1.1.12: Insert new Sec. 21.11 as follows:

"**21.11 Precast concrete special moment frames and special structural walls.**

"21.11.1 Scope.

Requirements of 21.11 apply to special moment frames, and to special reinforced concrete structural walls, resisting the earthquake induced forces and utilizing precast concrete elements."

"21.11.2 Seismic-force-resisting system requirements.

"21.11.2.1 A precast *seismic-force-resisting system* shall be permitted providing it satisfies either of the following criteria:

"1. The behavior of the system for forces up to and including those at the design displacement emulates the behavior of monolithic *reinforced concrete* construction and the system satisfies 21.11.3 or

"2. The system relies on its unique properties as a structure composed of interconnected precast elements and is demonstrated by experimental evidence and analysis to satisfy Sec. 21.2 through 21.7 of Chapter 21. Substantiating experimental evidence of acceptable performance of those elements required to sustain inelastic *deformations* shall be based upon cyclic testing of specimens representing those elements and shall satisfy 21.11.4.1 for special precast concrete moment frames and 21.11.4.2 for special precast concrete structural walls.

"**21.11.3 Emulation Design.** Precast structural systems emulating the behavior of monolithic reinforced concrete construction shall satisfy 21.11.3.1 where ductile connections are used and 21.11.3.2 where strong connections are used.

"21.11.3.1 Precast structural systems utilizing either wet or dry ductile connections at nonlinear action locations shall comply with all the applicable requirements of monolithic concrete construction for resisting *seismic forces* and satisfy the following:

"1. Where the moment acting on the connection is assumed equal to M_{pr}, the co-existing shear on the connection shall be no greater than $0.5S_{n\ Connection}$ and

"2. The nominal shear strength for the connection shall not be less than the shear strengths of the members immediately adjacent to that connection.

"**21.11.3.2** Precast structural systems not meeting the requirements of 21.11.2 shall utilize strong connections resulting in nonlinear response away from connections. Design shall satisfy the requirements of 21.11.5 in addition to the applicable requirements of monolithic concrete construction for resisting *seismic forces* except that the provisions of 21.3.1.2 shall apply to segments between nonlinear action locations.

"21.11.4 Interconnected element design.

"21.11.4.1 For special moment frames composed of interconnected precast elements, substantiating experimental evidence and analysis shall satisfy the requirements of ACI ITG/T1.1. It shall also be demonstrated by experimental evidence that the modules used for the validation testing of ACI ITG/T1.1 have the ability to carry, at 5 percent or greater drift ratios, the gravity loads that act on them in the generic frame.

"**21.11.4.2** For special structural wall systems composed of precast elements substantiating experimental evidence and analysis shall meet the requirements of Sec. 4.1, 4.2, 5.2, 5.3, 6.0, 7.0 and 8.0 of ACI ITG/T1.1 and:

2. The minimum stack module shall be a stack of wall panels at least two panels high.

2. For the third cycle at drift ratios equal to or exceeding the limiting drift ratio, the criteria for acceptance shall be that:

   a. Lateral load resisting capacity of the module shall be at least 80 percent of the peak lateral load;

   b. The relative energy dissipation ratio, as defined in ACI ITG/T1.1-99, shall equal or exceed 15 percent for that third cycle; and

   c. The stiffness at zero drift shall equal or exceed that required by ACI ITG/T1.1-99.

"3. The limiting drift ratio in percent shall satisfy the following criterion:

$$1.0 \le 0.67\left[h_w / l_w\right] + 0.5 \le 3.0$$

"21.11.4.3 Unless there is substantial experimental evidence obtained during a prior development program, the validation tests required in Sec. 21.11.4.1 and 21.11.4.2 shall:

1. Be conducted at full scale and

2. Be at least two in number for each characteristic configuration of intersecting beams and columns or structural walls.

"**21.11.4.4** The nonlinear response history analysis of Sec. 5.7 of the 2000 *NEHRP Recommended Provisions* shall be used to design the special precast concrete moment frame and

structural wall systems using the force-deformation characteristics from the subassemblage tests required by Sec. 21.11.4.1 or Sec. 21.11.4.2.

"21.11.5 Emulation design of frames using strong connections.

"21.11.5.1 Location. Nonlinear action location shall be selected so that there is a strong column/weak beam *deformation* mechanism under seismic effects. The nonlinear action location shall be no closer to the near face of strong connection than *h/2.* For column-to-footing connections where nonlinear action may occur at the column *base* to complete the mechanism, the nonlinear action location shall be no closer to the near face of the connection than *h/2*.

"21.11.5.2 Anchorage and splices. Reinforcement in nonlinear action region shall be fully developed outside both the strong connection region and the nonlinear action region. Noncontinuous anchorage reinforcement of strong connection shall be fully developed between the connection and the beginning of nonlinear action region. Lap splices are prohibited within connections adjacent to a *joint.*

"21.11.5.3 Design forces. *Design strength* of strong connections shall be based on :

$$\phi S_{nConnection} \geq \psi S_{eConnection}$$

" The dynamic amplification factor, ψ, shall be taken as 1.0.

"21.11.5.4 Column-to-column connection. The *strength* of such connection shall comply with 21.2.7.3 with the ψ taken as 1.4. Where the column-to-column connections occur, the columns shall be provided with transverse reinforcement as specified in 21.4.4.1 through 21.4.4.3 over their full height in the factorial axial compressive force in these members, including seismic effects, exceeds $A_g f_c'/10$.

> **"Exception:** Where column-to-column connection is located within the middle third of the column clear height, the following shall apply: (a) the *design* moment *strength,* ϕM_n, the connection shall not be less than 0.4 times the maximum M_{pr} for the column within the *story* height and (b) the *design* shear strength, ϕV_n, of the connection shall not be less than that determined per 21.4.5.1.

"21.11.5.5 Column-face connection. Any strong connection located outside the middle half of a beam span shall be a wet connection unless a dry connection can be substantiated by approved cyclic test results. Any mechanical connector located within such a column-face strong connection shall develop in tension or compression, as required, at least 40 percent of the specified yield *strength,* f_y, of the bar.

"21.11.6 Connections.

"21.11.6.1 At dry connections that are nonlinear action locations, displacements both in the direction of the action of the connection and the transverse to it shall be controlled.

"21.11.6.2 Dry connections shall be mechanical splices that are Type 2 at nonlinear action locations. Type 1 mechanical splices and welded splices shall be permitted elsewhere.

"21.11.6.3 Based on the results of physical experiments and analytical modeling of connections, their anchorage and their connection regions, both dry and wet connections at nonlinear action locations shall be classified as either Type Y or Type Z connections, as follows:

1. Type Y connections shall conform to 21.11.6.4 and develop, for the specified loading, ductility ratios greater than 4.0.
2. Type Z connections shall conform to 21.11.6.5 and develop, for the specified loading ductility ratios greater than 8.0.

"Testing of connections and evaluation of results shall be made in accordance with the principles specified in ACI ITG/T1.1 and ATC-24.

"**21.11.6.4** Type Y connections shall develop under flexural, shear, and axial load actions, as required, a probable strength, S_{pr}, determined using a ϕ value of unity, that is not less than 125 percent or more of the yield strength, S_y, of the connection. The anchorage on either side of the connection shall be designed to develop $1.3S_{pr}$ in tension and shall be connected directly by mechanical splice, welded splice, or tension lap splice to the principal reinforcement of the precast or cast-in-place element.

"**21.11.6.5** Type Z connections shall develop under flexural, shear and axial load actions, as required, a probable strength, S_{pr}, determined using a ϕ value of unity, that is not less than 140 percent of the yield strength, S_y of the connection. The anchorage on either side of the connection shall be designed to satisfy the requirements for Type Y connections in tension and in compression, and the connection region shall be able to develop $1.3S_{pr}$. Equilibrium-based plasticity models (strut-and-tie models) shall be permitted to be used for design of the connection region. Confinement reinforcement in the form of closed hoops or spirals with a yield force equal to not less than 5 percent of the compressive force and having a spacing not greater than 3 in. shall be provided where the local compressive stress exceeds $0.7f_c'$.

> **"Exception:** Connections in nonlinear action regions in test modules used to qualify seismic-force resisting systems for use based on structural testing in accordance with 21.11.3 shall be deemed to satisfy the requirements of this provision.

"21.11.6.6 Connections at nonlinear action locations shall be Type Z connections. Type Y connections shall be permitted at cross sections other than nonlinear action locations.

"21.11.6.7 Connections and the structural *components* of which they are part shall have a quality assurance plan satisfying the requirements of the 2000 *NEHRP Recommended Provisions* Sec. 3.2.1 and 3.2.2."

9.2 ANCHORING TO CONCRETE:

9.2.1 Scope:

9.2.1.1: These provisions provide design requirements for structural anchors in concrete used to transmit structural loads from attachments into concrete members or from one connected member to another by means of tension, shear, or a combination of tension and shear. Safety levels specified are intended for in-service conditions rather than for short-term handling and construction conditions.

9.2.1.2: These provisions apply to both cast-in concrete anchors such as headed studs, headed bolts or hooked bolts, and post-installed anchors, such as expansion anchors and undercut anchors. Specialty inserts, through bolts, bolts anchored to embedded large steel plates, adhesive or grouted bounded anchors, and direct anchors, such as powder or pneumatic actuated nails or bolts are not included. Reinforcement used as a part of the embedment shall be designed in accordance with ACI 318.

9.2.1.3: Headed studs and headed bolts that have a geometry consistent with ASME B1.1, B18.2.1, and B18.2.6.9 shall be designed by Sec. 9.2.4. Hooked bolts that have a geometry that has been demonstrated to result in pullout strength without the benefit of friction in uncracked concrete equal to or exceeding 1.4 N_p (where N_p is given by Eq. 9.2.5.3.5) are included.

9.2.1.4: Post-installed anchors shall be tested before use to determine their nominal strength in uncracked concrete, cracked concrete, or both and also to verify their compliance with the requirements of these design provisions for reliability and performance under anticipated conditions of service. Such tests shall be conducted by an independent testing agency and shall be verified by a registered design professional with full description and details of the testing program, procedures, results, and conclusions. The test program shall be comprehensive and shall include tests, results, and analysis for the requirements of Sec. 9.2.1.4.1 and 9.2.1.4.3.

9.2.1.4.1 Reference Tests: Reference tests shall establish failure modes, technical data, and *k* factors to use with these design provisions for uncracked or cracked concrete or both.

9.2.1.4.2 Reliability Tests: Reliability tests shall establish the appropriate category for the fastener using tests of sensitivity to reduced installation effort, sensitivity to low strength concrete with larger tolerance drill bit in cracked or uncracked concrete, and sensitivity to high strength concrete with a lower tolerance drill bit in cracked or uncracked concrete. Tests shall also be performed in uncracked concrete with repeated loading and in cracked concrete with an opening and closing crack of at least 1,000 cycles to establish the fastener suitability.

9.2.1.4.3 Service-condition Tests: Service-condition tests shall establish requirements for edge distance, spacing between fasteners, splitting near an edge, shear capacity and pryout. For cracked concrete, simulated seismic qualification tests shall establish the ability of the fastener to perform in tension and shear under seismic conditions.

9.2.1.5: Load applications that are predominantly high cycle fatigue or impact are not covered by these provisions.

9.2.2 Notations and Definitions:

9.2.2.1 Notations:

A_b = bearing area of the head of the stud or anchor bolt (in^2).

A_{No} = projected concrete failure area of one anchor, for calculation of strength in tension, when not limited by edge distance or spacing, as defined in Sec. 9.2.5.2.1 (in^2). (see Figure C9.2.5.2.2-1).

A_N = projected concrete failure area of an anchor or group of anchors for calculation of strength in tension as defined in Sec. 9.2.5.2.1, in^2. A_N shall not be taken greater than nA_{No} (see Figure C9.2.5.2.1-2).

A_{se} = effective cross-sectional area of anchor (in^2).

A_{sl} = effective cross-sectional area of expansion or undercut anchor sleeve, if sleeve is within shear plane (in^2).

A_{Vo} = projected concrete failure area of one anchor, for calculation of strength in shear, when not limited by corner influences, spacing, or member thickness, as defined in Sec. 9.2.6.2.1 (in^2) (See Figure C9.2.6.2.1-1).

A_V = projected concrete failure area of an anchor or group of anchors, for calculation of strength in shear, as defined in Sec. 9.2.6.2.1 (in^2). A_V shall not be taken greater than $nA_{Vo.}$ (see Figure C9.2.6.2.1-2).

c = distance from center of an anchor shaft to the edge of concrete (in.).

c_1 = distance from the center of an anchor shaft to the edge of the concrete in one direction (in). Where shear force is applied to an anchor, c_1 is in the direction of the shear force (see Figure C9.2.6.2.1-2).

c_2 = distance from center of an anchor shaft to the edge of the concrete in the direction orthogonal to c_1 (in.).

c_{max} = the largest of the edge distances that are less than or equal to 1.5 h_{ef} (in.) used only for the case of 3 or 4 edges.

c_{min} = the smallest of the edge distances that are less than or equal to 1.5 h_{ef} (in.)

d_o = outside diameter of anchor or shaft diameter of headed stud, headed anchor bolt, or hooked anchor (in.) (see also Sec. 9.2.8.4).

d_u = diameter of head of stud or anchor bolt or equivalent diameter of effective perimeter of an added plate or washer at the head of the anchor (in.).

e_h = distance from the inner surface of the shaft of a J-bolt to the outer tip of the J- or L-bolt (in.).

e_N' = eccentricity of normal force on a group of anchors; the distance between the resultant tension load on a group of anchors in tension and the centroid of the group of anchors loaded in tension (in.) (see Figures C9.2.5.2.4-1 and -2).

e_v' = eccentricity of shear force on a group of anchors; the distance between the point of shear force application and the centroid of the group of anchors resisting shear in the direction of the applied shear (in.).

f_c' = specified compressive strength of concrete (psi).

f_{ct} = specified tensile strength of concrete (psi).

f_r = modules of rapture of concrete (psi).

f_t = calculated tensile stress in a region of a member (psi).

f_y = specified yield strength of anchor steel (psi).

f_{ut} = specified tensile strength of anchor steel (psi).

f_{utsl} = specified tensile strength of anchor sleeve (psi).

h = thickness of member in which an anchor is anchored measured parallel to the anchor axis (in.).

h_{ef} = effective anchor embedment depth (in.) (see Sec. 9.2.8.5 and Figure C9.2.2.2).

k = coefficient for basic concrete breakout strength in tension.

k_{cp} = coefficient for pryout strength.

l = load bearing length of anchor for shear, not to exceed $8d_o$ (in.).

l = h_{ef} for anchors with a constant stiffness over the full length of the embedded section, such as headed studs or post-installed anchors with one tubular shell over the full length of the embedment depth.

l = $2d_o$ for torque-controlled expansion anchors with a distance sleeve separated from the expansion sleeve.

n = number of anchors in a group.

N_b = basic concrete breakout strength in tension of a single anchor in cracked concrete, as defined in Sec. 9.2.5.2.2 (lb).

N_{cb} = nominal concrete breakout strength in tension of a single anchor, as defined in Sec. 9.2.5.2.1 (lb).

N_{cbg} = nominal concrete breakout strength in tension of a group of anchors, as defined in Sec. 9.2.5.2.1 (lb).

N_n = nominal strength in tension (lb).

N_p = pullout strength in tension of a single anchor in cracked concrete, as defined in Sec. 9.2.5.3.4 or 9.2.5.3.5 (lb).

N_{pn} = nominal pullout strength in tension of a single anchor, as defined in Sec. 9.2.5.3.1 (lb).

N_{sb} = side-face blowout strength of a single anchor (lb).

N_{sbg} = side-face blowout strength of a group of anchors (lb).

N_s = nominal strength of a single anchor in tension as governed by the steel strength, as defined in Sec. 9.2.5.1.2 (lb).

N_u = factored tensile load (lb).

s = anchor center-to center spacing (in).

s_o = spacing of the outer anchors along the edge in a group (in).

t = thickness of washer or plate (in).

V_b = basic concrete breakout strength in shear of a single anchor in cracked concrete, as defined in Sec. 9.2.6.2.2 or 9.2.6.2.3 (lb).

V_{cb} = nominal concrete breakout strength in shear of a single anchor as defined in Sec. 9.2.6.2.1 (lb).

V_{cbg} = nominal concrete breakout strength in a shear group of anchors as defined in Sec. 9.2.6.2.1 (lb).

V_{cp} = nominal concrete pryout strength, as defined in Sec. 9.2.6.3 (lb).

V_n = nominal shear strength (lb).

V_s = nominal strength in shear of a single anchor as governed by the steel strength as defined in Sec. 9.2.6.1.1 (lb).

V_u = factored shear load (lb).

ϕ = strength reduction factor (see Sec. 9.2.4.4 and 9.2.4.5).

Ψ_1 = modification factor, for strength in tension, to account for anchor groups loaded eccentrically as defined in Sec. 9.2.5.2.4.

Ψ_2 = modification factor, for strength in tension, to account for edge distances smaller than $1.5h_{ef}$ as defined in Sec. 9.2.5.2.5

Ψ_3 = modification factor, for strength in tension, to account for cracking as defined in Sec. 9.2.5.2.6 and 9.2.5.2.7.

Ψ_4 = modification factor, for pullout strength, to account for cracking as defined in Sec. 9.2.5.3.1 and Sec. 9.2.5.3.6.

Ψ_5 = modification factor, for strength in shear, to account for the anchor groups loaded eccentrically as defined in Sec. 9.2.6.2.5.

Ψ_6 = modification factor, for strength in shear, to account for edge distances smaller than $1.5c_1$ as defined in Sec. 9.2.6.2.6.

Ψ- = modification factor, for strength in shear, to account for cracking, as defined in Sec. 9.2.6.2.7

9.2.2.2 Definitions:

Anchor: A metallic element either cast into concrete or post-installed into a hardened concrete member and used to transmit applied loads including straight bolts, hooked bolts (J-or L-bolt), headed studs, expansion anchors, undercut anchors, or inserts.

Anchor Group: A number of anchors of approximately equal effective embedment depth with each anchor spaced as less than three times its embedment depth from one or more adjacent anchors.

Anchor Pullout Strength: The strength corresponding to the anchoring device or a major *component* of the device sliding out from concrete without breaking out a substantial portion of the surrounding concrete.

Attachment: The structural assemble, external to the surface of the concrete, that transmits loads to the anchor.

Brittle Steel Element: An element with a tensile test elongation of less than 14 percent over a 2 in. gage length reduction in area of less than 40 percent, or both.

Concrete Breakout Strength: The strength corresponding to a volume of concrete surrounding the anchor or group of anchors separating from the memeber.

Concrete Pryout Strength: The strength corresponding to formation of a concrete spall behind a short, stiff anchor with an embedded base that is displaced in the direction opposite to the applied shear force.

Distance Sleeve: A sleeve that encases the center part of an undercut anchor, a torque-controlled expansion anchor, or a displacement-controlled expansion anchor but does not expand.

Ductile Steel Element: An element with a tensile test elongation of at least 14 percent over a 2 in. gage length and reduction in area of at least 40 percent.

Edge Distance: The distance from the edge of the concrete surface to the center of the nearest anchor.

Effective Embedment Depth: The overall depth through which the anchor transfers force to the surrounding concrete. The effective embedment depth normally will be the depth of the failure surface in tension applications. For cast-in headed anchor bolts and headed studs, the effective embedment depth is measured from the bearing contact surface of the head. (See Figure C9.2.2.1.)

Expansion Anchor: A post-installed anchor inserted into hardened concrete that transfers loads into the concrete by direct bearing and/or friction. Expansion anchors may be torque-controlled, where the expansion is achieved by a torque acting on the screw or bolt, or displacement-controlled, where the expansion is achieved by impact forces acting on a sleeve or a plug and the anchorage is controlled by the length of travel of the sleeve or plug.

Expansion Sleeve: The outer part of an expansion anchor that is forced outward by the center part, either by applied torque or impact, to bear against the sides of the pre-drilled hole.

5 Percent Fractile: A statistical term meaning 90 percent confidence that 95 percent of the actual strengths will exceed the nominal strength. Determination shall include the number of tests when evaluating data.

Hooked Bolt: A cast-in anchor anchored mainly by mechanical interlock from the 90-degree bend (L-bolt) or 180-degree bend (J-bolt) at its lower end.

Insert (specialty insert): Predesigned and pre-fabricated cast-in anchors specifically designed for attachment of bolted or slotted connections. Inserts often are used for handling, transportation, and erection but are used also for anchoring structural elements.

Post-Installed Anchor: An anchor installed in hardened concrete. Expansion anchors and undercut anchors are examples of post-installed anchors.

Projected Area: The area on the free surface of the concrete member that is used to represent the larger base of the assumed rectilinear failure surface.

Side-Face Blowout Strength: The strength of the anchors with deeper embedment but thinner side cover corresponding to concrete spalling on the side face around the embedded head while no major breakout occurs at the top concrete surface.

Undercut Anchor: A post-installed anchor anchored mainly by mechanical interlock provided by an undercutting in the anchoring concrete. The undercutting is achieved with a special drill before installing the anchor or, alternatively, by the anchor itself during its installation.

9.2.3 General Requirements:

9.2.3.1: Anchors and anchor groups shall be designed for critical effects of factored loads as determined by elastic analysis. Plastic analysis approaches are permitted where nominal strength is controlled by ductile steel elements provided that deformational compatibility is taken into account.

9.2.3.2: Except for load combinations that include earthquake forces or effects, anchors shall be designed for all load combinations outlined in Sec. 9.2 of ACI 318. Where resistance to specified earthquake loads or forces, E, are included in the design, the load combinations Sec. 5.2.7 of this document shall apply.

9.2.3.3: When anchor design includes seismic loads, the following additional requirements shall apply.

9.2.3.3.1: In structures assigned to *Seismic Design Categories* C, D, E, or F post-installed structural anchors for use under Sec. 9.2.3.2 shall have passed the simulated seismic tests in accordance with Sec. 9.2.1.4.

9.2.3.3.2: In structures assigned to *Seismic Design Categories* C, D, E or F, the design strength of anchors shall be taken as 0.75 ϕV_n, where ϕ is given in Sec. 9.2.4.4 or 9.2.4.5 and N_n and V_n are determined in accordance with Sec. 9.2.4.1.

9.2.3.3.3: In structures assigned to *Seismic Design Categories* C, D, E or F, anchors shall be designed to be governed by tensile or sheer strength of a ductile steel element unless Sec. 9.2.3.3.4 is satisfied.

9.2.3.3.4: In lieu of Sec. 9.2.3.3.3, the attachment that the anchor is connecting to the structure shall be designed so that the member being attached will undergo ductile yielding at a load level no greater than 75 percent of the minimum anchor design strength or the minimum anchor design strength is at least Ω_0 times the attachment force determined from design loads of the attached structure or 2.5 times the attachment force determined from the design loads of the attached nonstructural *component*.

9.2.3.4: All provisions for anchor axial tension and shear strength apply to normal-weight concrete. When lightweight aggregate concrete is used, provisions for N_n and V_n shall be

modified by multiplying all values of $\sqrt{f_c'}$ affecting N_n and V_n by 0.75 for "all lightweight" concrete and 0.85 for "sand-lightweight" concrete. Linear interpolation shall be permitted when partial sand replacement is used.

9.2.3.5: The values of f_c' used for calculations in these provisions shall not exceed 10,000 psi for cast-in anchors and 8000 psi for post-installed anchors.

9.2.4 General Requirements for Strength of Structural Anchors:

9.2.4.1: Strength design of structural anchors shall be based on the computation or test evaluation of the following:

a. Steel strength of anchor in tension Sec. 9.2.5.1,

b. Steel strength of anchor is shear Sec. 9.2.6.1,

c. Concrete breakout strength of anchor in tension Sec. 9.2.4.2 and 9.2.5.2

d. Concrete breakout strength of anchor in shear Sec. 9.2.4.2 and 9.2.6.2,

e. Pullout strength of anchor in tension Sec. 9.2.4.2 and 9.2.5.3,

f. Concrete side-face blowout strength of anchor in tension Sec. 9.2.4.2 and 9.2.5.4,

g. Concrete pryout strength of anchor in shear Sec. 9.2.4.2 and 9.2.6.3,

h. Required edge distances, spacings and thickness to preclude splitting failure Sec. 9.2.4.2 and 9.2.8.

9.2.4.1.1: For the design of anchors, except as required in Sec. 9.2.3.3:

$$\phi N_n \geq N_u \qquad (9.2.4.1.1\text{-}1)$$

$$\phi V_n \geq V_u \qquad (9.2.4.1.1\text{-}2)$$

9.2.4.1.2: When both N_u and V_u are present, interaction effects shall be considered in accordance with 9.2.4.3.

9.2.4.1.3: In Eq. 9.2.4.1.1-1 and 9.2.4.1.1-2, ϕN_n and ϕV_n are the lowest design strengths determined from all appropriate failure modes. ϕN_n is the lowest design strength in tension of an anchor or group of anchors as determined from consideration of ϕN_s, ϕN_{pn}, either ϕN_{sb} or ϕN_{sbg}, and either ϕN_{cb} or ϕN_{cbg}. ϕV_n is the lowest design strength in shear of an anchor or a group of anchors as determined from consideration of ϕV_s, either ϕV_{cb} or ϕV_{cbg}, and ϕV_{cp}.

9.2.4.2: The nominal strength for any anchor and group of anchors shall be based on design models that result in predictions of strength in substantial agreement with results of comprehensive tests. The materials used in the tests shall be compatible with the materials used in the structure. The nominal strength shall be based on the 5 percent fractile of the basic individual anchor strength with the modifications made for the number of anchors, the effects of

close spacing of anchors, proximity to edges, depth of the concrete member, eccentric loadings of anchor groups, and presence or absence of cracking. Limits on edge distances and anchor spacing in the design models shall be consistent with the tests that verified the model.

9.2.4.2.1: The effect of supplementary reinforcement provided to confine or restrain the concrete breakout, or both, shall be permitted to be included in the design models of Sec. 9.2.4.2.

9.2.4.2.2: For anchors with diameters not exceeding 2 in. and with tensile embedment not exceeding 25 in. in depth, the concrete breakout strength requirements of Sec. 9.2.4.2 shall be considered satisfied by the design procedure of Sec. 9.2.5.2 and 9.2.6.2.

9.2.4.3: Resistance to combined tensile and shear loads shall be considered in design using an interaction expression that results in computation of strength in substantial agreement with results of comprehensive tests. This requirement shall be considered satisfied by Sec. 9.2.7.

9.2.4.4: Strength reduction factor ϕ for anchoring to concrete shall be as follows when the load combinations of Sec. 9.2 of ACI 318 and Sec. 5.2.7 of this document are used:

Anchor governed by tensile or shear strength of a ductile steel element	0.90
Anchor governed by tensile or shear strength of a brittle steel element	0.75

Anchor governed by concrete breakout, blowout, pullout, or pryout

	Condition A	**Condition B**
i. Shear loads	0.85	0.75
ii. Tension loads		
Cast-in headed studs, headed bolts, or hooked bolts	0.85	0.75
Post-installed anchors with category as determined from anchor pre-qualification tests of Sec. 9.2.1.4		
Category 1 (low sensitivity to installation and high reliability)	0.85	0.75
Category 2 (medium sensitivity to installation and medium reliability)	0.75	0.65
Category 3 (high sensitivity to installation and lower reliability)	0.65	0.55

Condition A applies where the potential concrete failure surfaces are crossed by supplementary reinforcement proportional to tie the potential concrete failure prism into the structural member. Condition B applies where such supplementary reinforcement is not provided to where pullout or pryout strength governs.

9.2.4.5: Strength reduction factor ϕ for fastening to concrete shall be as follows when the load combinations referenced in ASCE 7 are used:

Anchor governed by tensile or shear strength of a ductile steel element	0.80

Anchor governed by tensile or shear strength of a brittle steel element		0.70
Anchor governed by concrete breakout, blowout, pullout, or pryout		
	Condition A	**Condition B**
i. Shear loads	0.75	0.70
ii. Tension loads		
Cast-in headed studs, headed bolts or hooked bolts	0.75	0.70
Post-installed anchors with category as determined from anchor prequalification tests of Sec. 9.2.1.4		
Category 1 (low sensitivity to installation and high reliability)	0.75	0.65
Category 2 (medium sensitivity to installation and medium reliability)	0.65	0.55
Category 3 (high sensitivity to installation and lower reliability)	0.55	0.45

Condition A applies where the potential concrete failure surfaces are crossed by supplementary reinforcement proportioned to tie the potential concrete failure prism into the structural member. Condition B applies where such supplementary reinforcement is not provided where pullout or pryout strength governs.

9.2.5 Design Requirements for Tensile Loading:

9.2.5.1 Steel Strength of Anchor in Tension:

9.2.5.1.1: The nominal strength of an anchor in tension as governed by the steel, N_s, shall be evaluated by calculations based on the properties of the anchor material and the physical dimensions of the anchor. Alternatively, it shall be permitted to use values based on the 5 percent fractile of the test results to establish values of N_s

9.2.5.1.2: Unless determined by the 5 percent fractile of test results, nominal strength of an anchor or group of anchors in tension shall not exceed the following:

For anchor material with a well-defined yield point

$$N_s = nA_{se}f_y$$

For anchor material without a well-defined yield point where f_{ut} shall not be taken greater than 125,000 psi

$$N_s = nA_{se}\left(0.8f_{ut}\right)$$

9.2.5.2 Concrete Breakout Strength of Anchor in Tension:

9.2.5.2.1: Unless determined in accordance with Sec. 9.2.4.2, nominal concrete breakout strength of an anchor or group of anchors in tension shall not exceed the following:

For a single anchor

$$N_{cb} = \frac{A_N}{A_{No}} \psi_2 \psi_3 N_b \qquad (9.2.5.2.1\text{-}1)$$

For a group of anchors

$$N_{cbg} = \frac{A_n}{A_{No}} \psi_1 \psi_2 \psi_3 N_b \qquad (9.2.5.2.1\text{-}2)$$

N_b is the basic concrete breakout strength value for a single anchor in tension in cracked concrete. A_n is the projected area of the failure surface for the anchor or group of anchors that shall be approximated as the base of the rectilinear geometrical figure that results from projecting the failure surface outward $1.5h_{ef}$ from the center lines of the anchor or, in the case of a group of anchors, from a line through a row of adjacent anchors. A_n shall not exceed nA_{No}, where n is the number of tensioned anchors in the group. A_{No} is the projected area of the failure surface of the single anchor in remote from edges:

$$A_{No} = 9h_{ef}^{\ 2}$$

9.2.5.2.2: Unless determined in accordance with Sec. 9.2.4.2, the basic concrete breakout strength of a single anchor in tension in cracked concrete shall not exceed:

$$N_b = \sqrt[k]{f_c'}\, h_{ef}^{\ 1.5} \qquad (9.2.5.2.2\text{-}1)$$

where

k = 24 for cast-in headed studs, headed bolts and hooked bolts and

k = 17 for post-installed anchors.

Alternatively, for cast-in headed studs and headed bolts with 11 in. < h_{ef} < 25 in., the basic concrete breakout strength of a single anchor in tension in cracked concrete shall not exceed:

$$N_b = \sqrt[k]{f_c'}\, h_{ef}^{\ 5/3} \qquad (9.2.5.2.2\text{-}2)$$

where k = 16.

9.2.5.2.3: For the special case of anchors in an application with three or four edges and the largest edg e distance c_{max} < 1.5 h_{ef}, the embedment depth h_{ef} used in Eq. 9.2.5.2.1-3, 9.2.5.2.2-1, 9.2.5.2.4 and 9.2.5.2.5-1 and -2 shall be limited to c_{max}/1.5.

9.2.5.2.4: The modification factor for eccentrically loaded anchor groups is:

$$\psi_1 = \frac{1}{\left(1 + \frac{2e_N'}{3h_{ef}}\right)} \leq 1 \qquad (9.2.5.2.4)$$

Eq. 9.2.5.2.4 is valid for $e_n' \leq s/2$.

If the loading of an anchor group is such that only some anchors are in tension, only those anchors that are in tension shall be considered when determining the eccentricity, e_n', for use in Eq. 9.2.5.2.4.

Where eccentric loading exists about two axes, the modification factor, y_l, shall be computed for each axis individually and the product of these factors used as y_l in Eq. 9.2.5.2.4

9.2.5.2.5: The modification factor for edge effects is:

$$\psi_2 = 1 \; if \; c_{\min} \geq 1.5h_{ef} \qquad (9.2.5.2.5\text{-}1)$$

$$\psi_2 = 0.7 + 0.3\frac{c_{\min}}{1.5h_{ef}} \; if \; c_{\min} < 1.5h_{ef} \qquad (9.2.5.2.5\text{-}1)$$

9.2.5.2.6: When an anchor is located in a region of a concrete member where analysis indicates no cracking ($f_t < f_r$) at service load levels, the following modification factor shall be permitted:

ψ_3 = 1.25 for cast-in headed studs, headed bolts, and hooked bolts and

ψ_3 = 0.4 for post-installed anchors.

9.2.5.2.7: When analysis indicates cracking at service load levels, y_3 shall be taken as 1.0 for both cast-in anchors and post-installed anchors. Post-installed anchors shall be qualified for use in cracked concrete in accordance with Sec. 9.2.1.4. The cracking in the concrete shall be controlled by flexural reinforcement distributed in accordance with Sec. 10.6.4 of ACI 318 or equivalent crack control shall be provided by confining reinforcement.

9.2.5.2.8: When an additional plate or washer is added at the head of the anchor, it shall be permitted to calculate the projected area of the failure surface by projecting the failure surface outward $1.5h_{ef}$ from the effective perimeter of the plate or washer. The effective perimeter shall not exceed the value at a section projected outward more than t from the outer edge of the head of the anchor where t is the thickness of the washer or plate.

9.2.5.3 Pullout Strength of Anchor in Tension:

9.2.5.3.1: Unless determined in accordance with Sec. 9.2.4.2 the nominal pullout strength of an anchor in tension shall not exceed:

$$N_{pn} = \psi_4 N_p \qquad (9.2.5.3.1)$$

9.2.5.3.2: For post-installed expansion and undercut anchors, it is not permissible to calculate the pullout strength of tension. Values of N_p shall be based on 5 percent fractile of tests performed and evaluated according to Sec. 9.2.1.4.

9.2.5.3.3: For single cast-in headed studs and headed bolts, it shall be permitted to evaluate the pullout strength in tension using Sec. 9.2.5.3.4. For single J-bolts and L-bolts, it shall be permitted to evaluate the pullout strength in tension using Sec. 9.2.5.3.5. Alternatively, it shall be permitted to use values of N_p based on the 5 percent fractile of tests performed and evaluated in the same manner as the test procedures of Sec. 9.2.1.4 but without the benefit of friction.

9.2.5.3.4: Unless determined in accordance with Sec. 9.2.4.2, the pullout strength in tension of a single headed stud or headed bolt, N_p for use in Eq. 9.2.5.3.1 shall not exceed:

$$N_p = A_b 8 f_c' \qquad (9.2.5.3.4)$$

9.2.5.3.5: Unless determined in accordance with Sec. 9.2.4.2 the pullout strength in tension of a single J-bolt or L-bolt, N_p for use in Eq. 9.2.5.3.1 shall not exceed:

$$N_p = 0.9 f_c' e_h d_o \qquad (9.2.5.3.5)$$

where $3d_o < e_h < 4.5d_o$.

9.2.5.3.6: For an anchor located in a region of concrete member where analysis indicates no cracking ($f_t < f_r$) at service load levels, the following modification factor shall be permitted:

$$\psi_4 = 1.4$$

Otherwise, Ψ, shall be taken as 1.0.

9.2.5.4 Concrete Side-Face Blowout Strength of a Headed Anchor in Tension:

9.2.5.4.1: For a single headed anchor with deep embedment close to an edge $c < 0.4h_{ef}$), unless determined in accordance with Sec. 9.2.4.2, the nominal side-face blowout strength N_{sb} shall not exceed:

$$N_{sb} = 160_c \sqrt{A_b} \sqrt{f_c'}$$

If the single anchor is located at a perpendicular distance, c_2, less than 3c from an edge, the value of N_{sb} shall be modified by multiplying it by the factor $(1 + c_2/c)/4$ where $1 < c_2/c < 3$.

9.2.5.4.2: For multiple headed anchors with deep embedment close to an edge $c < 0.4\ h_{ef}$) and spacing between anchors less than 6c, unless determined in accordance with Sec. 9.2.4.2, the nominal strength of the group of anchors for a side-face blowout failure, N_{sbg}, shall not exceed:

$$N_{sbg} = \left(1 + \frac{S_o}{6c}\right) N_{sb} \qquad (9.2.5.4.2)$$

where s_o is the spacing of the outer anchors along the edge in the group and N_{sb} is obtained from Eq. 9.2.5.4.1 without the modification for a perpendicular edge distance.

9.2.6 Design Requirements for Shear Loading:

9.2.6.1 Steel Strength of Anchor in Shear:

9.2.6.1.1: The nominal strength of anchor in shear as governed by steel, V_s, shall be evaluated by calculations based on the properties of the anchor material and the physical dimensions of the anchor. Alternatively, it shall be permitted to use values based on the 5 percent fractile of test results to establish values of V_s.

9.2.6.1.2: Unless determined by the 5 percent fractile of test results, nominal strength of an anchor or group of anchors in shear shall not exceed the following:

a. For anchor material with a well-defined yield point:

$$V_s = nA_{se}f_y \qquad (9.2.6.1.2\text{-}1)$$

b. For cast-in anchors without a well defined yield point:

$$V_s = n0.6A_{se}f_{ut} \qquad (9.2.6.1.2\text{-}2)$$

where f_{ut} shall not be taken greater than 125,000 psi.

c. For post-installed anchors without a well-defined yield point:

$$V_s = n\left(0.6A_{se}f_{ut} + 0.4A_{sl}f_{utsl}\right) \qquad (9.2.6.1.2\text{-}3)$$

where f_{ut} shall be taken greater than 125,000 psi.

9.2.6.1.3: Where anchors are used with built-up grout pads, the nominal strengths of Sec. 9.2.6.1.2 shall be reduced by 20 percent.

9.2.6.2: Concrete Breakout Strength of Anchors in Shear:

9.2.6.2.1: Unless determined in accordance with Sec. 9.2.4.2, nominal concrete breakout strength in shear of an anchor or group of anchors shall not exceed the following:

For shear force perpendicular to the edge on a single anchor:

$$V_b = \frac{A_V}{A_{Vo}}\psi_6\psi_7 V_b \qquad (9.2.6.2.1\text{-}1)$$

For shear force perpendicular to the edge on a group of anchors:

$$V_{cbg} = \frac{A_v}{A_{vo}}\psi_5\psi_6\psi_7 V_b \qquad (9.2.6.2.1\text{-}2)$$

For shear force parallel to an edge, V_{ch} or V_{cbg} shall be permitted to be twice the value for the force determined from Eq. 9.2.6.2.1-1 or 9.2.6.2.1-2- respectively, with ψ_6 taken equal to 1.

For anchors located at a corner, the limiting nominal concrete breakout strength shall be determined for each edge and the minimum value shall be used.

V_b is the basic concrete breakout strength value for a single anchor. A_v is the projected area of the failure surface on the side of the concrete member at its edge for a single anchor or a group of anchors. It shall be permitted to evaluate this area as the base of a truncated half pyramid projected on the side face of the member where the top of the half pyramid is given by the axis of the anchor row selected as critical. The value of c_1 shall be taken as the distance from the edge to this axis, A_y, and shall not exceed nA_{vo} where n is the number of anchors in the group

A_{vo} is the projected area for a single anchor in a deep member and remote from edges in the direction perpendicular to the shear force. It shall be permitted to evaluate this area as the base of a half pyramid with a side length parallel to the edge of $3c_1$ and the depth of 1.5 c_1.

$$A_{vo} = 4.5c_1^{\ 2} \qquad (9.2.6.2.1\text{-}3)$$

Where anchors are located at varying distances from the edge and the anchors are welded to the attachment so as to distribute the force to all anchors, it shall be permitted to evaluate the strength based on the distance to the farthest row of anchors from the edge. In this case, it shall be permitted to base the value of c_1 on the distance from the edge to the axis of the farthest anchor row that is selected as critical, and all of the shear shall be assumed to be carried by this critical anchor row alone.

9.2.6.2.2: Unless determined in accordance with Sec. 9.2.4.2, the basic concrete breakout strength in shear of a single anchor in cracked concrete shall not exceed:

$$V_b = 7\left(\frac{l}{d_o}\right)^{0.2}\sqrt{d_o}\sqrt{f'_c}\,c_1^{1.5} \qquad (9.2.6.2.2)$$

9.2.6.2.3: For cast-in headed studs, headed bolts, or hooked bolts that are rigidly welded to steel attachments having a minimum thickness equal to the greater of 3/8 in. or half of the anchor diameter, unless determined in accordance with Sec. 9.2.4.2, the basic concrete breakout strength in shear of a single anchor in cracked concrete shall not exceed:

$$V_b = 8\left(\frac{1}{d_o}\right)^{0.2}\sqrt{d_o}\sqrt{f'_c}\,c_1^{1.5} \qquad (9.2.6.2.3)$$

provided that:

a. For groups of anchors, the strength is determined based on the strength of the row of anchors farthest from the edge,

b. The center-to-center spacing of the anchors is not less than 2.5 in., and

c. Supplementary reinforcement is provided at the corners if $c_2 \le 1.5h_{ef}$.

9.2.6.2.4: For the special case of anchors in a thin member influenced by three or more edges, the edge distance c_1 used in Eq. 9.2.6.2.1-3, 9.2.6.2.2, 9.2.6.2.3, 9.2.6.2.5, 9.2.6.2.6-1 or -2 shall be limited to $h/1.5$.

9.2.6.2.5: The modification factor for eccentrically loaded anchor groups is:

$$\psi_5 = \frac{1}{1 + \frac{2e_v'}{3c_1}} \leq 1 \qquad (9.2.6.2.5)$$

Eq. 9.2.6.2.5 is valid for $e_v' \leq s/2$.

9.2.6.2.6: The modification factor edge effects is:

$$\psi_6 = 1 \; if \; c_2 \geq 1.5c_1 \qquad (9.2.6.2.6\text{-}1)$$

$$\psi_6 = 0.7 + 0.3\frac{c_2}{1.5c_1} \; if \; c_2 < 1.5c_1 \qquad (9.2.6.2.6\text{-}2)$$

9.2.6.2.7: For anchors located in a region of a concrete member where analysis indicates no cracking ($f_t < f_r$) at the service loads, the following modification factor shall be permitted:

$$\psi_7 = 1.4$$

For anchors located in a region of a concrete member where analysis indicates cracking at service load levels, the following modification factors shall be permitted. In order to be considered as edge reinforcement, the reinforcement shall be designed to resist the concrete breakout:

ψ = 1.0 for anchors in cracked concrete with no edge reinforcement or edge reinforcement smaller that a No. 4 bar

ψ = 1.2 for anchors in cracked concrete with edge reinforcement of a No. 4 bar or greater between the anchor and the edge

ψ = 1.4 for anchors in cracked concrete with edge reinforcement of a No. 4 bar or greater between the anchor and the edge and with the edge reinforcement enclosed within stirrups spaced at not more than 4 in.

9.2.6.3 Concrete Pryout Strength of Anchor in Shear:

9.2.6.3.1: Unless determined in accordance with Sec. 9.2.4.2, the nominal pryout strength, V_{cp}, shall not exceed:

$$V_{cp} = k_{cp} N_{cb} \qquad (9.2.6.3.1)$$

where

k_{cp} = 1.0 for $h_{ef} < 2.5$ in.,

k_{cp} = 2.0 for $h_{ef} > 2.5$ in., and N_{cb} shall be determined from Eq. 9.2.5.2-1 (lb).

9.2.7 Interaction of Tensile and Shear Forces: Unless determined in accordance with Sec. 9.2.4.3, anchors or groups of anchors that are subjugated to both shear and axial loads shall be designed to satisfy the requirements of Sec. 9.2.7.1 through 9.2.7.3. The value of ϕN_n shall be the smallest of shear strength of the anchor in tension, concrete breakout strength of anchor in tension, pullout strength of anchor in tension, and side-face blowout strength. The value of ϕV_n shall be the smallest of the steel strength of an anchor and shear, the concrete breakout strength of anchor in shear, and the pryout strength.

9.2.7.1: If $V_u \leq 0.2\ \phi V_n$, then full strength in tension shall be permitted: $\phi N_n > N_u$

9.2.7.2: If $N_u \leq 0.2\ \phi N_n$, then full strength in shear shall be permitted: $\phi V_n > V_u$

9.2.7.3: If $V_u > 0.2\ \phi V_n$ and $N_u > 0.2\ \phi N_n$, then:

$$\frac{N_u}{\phi N_n} + \frac{V_u}{\phi V_n} \leq 1.2 \qquad (9.2.7.3)$$

9.2.8 Required Edge Distances, Spacings, and Thicknesses to Preclude Splitting Failure: Minimum spacings and edge distances for anchors and minimum thickness of members shall conform to Sec. 9.2.8.1 through Sec. 9.2.8.5, unless reinforcement is provided to control splitting. Lesser values from product-specific tests performed in accordance with prequalification test in accordance with Sec. 9.2.1.4 shall be permitted.

9.2.8.1: Unless determined in accordance with Sec. 9.2.8.4, minimum center-to-center spacing of anchors will be $4d_o$ for untorqued cast-in anchors that will not be torqued or otherwise pretensioned and $6d_o$ for torqued or otherwise pretensioned cast-in anchors and all post-installed anchors.

9.2.8.2: Unless determined in accordance with Sec. 9.2.8.4, minimum edge distances for cast-in headed anchors that will not be torqued or otherwise pre-tensioned shall be based on minimum cover requirements for reinforcement in Sec. 7.7 of ACI 318. For cast-in headed anchors that will be torqued or otherwise pretensioned, the minimum edge distances shall be $6d_o$.

9.2.8.3: Unless determined in accordance with Sec. 9.2.8.4, minimum edge distances for post-installed anchors shall be based on the greater of the minimum cover requirements for reinforcement in Sec. 7.7 of ACI 318 or the minimum edge distance requirements for the products as determined by tests in accordance with Sec. 9.2.1.4 and shall not be less than 2.0 times the maximum aggregate size. In the absence of such product-specific test information, the minimum edge distance shall be taken as not less than:

$6d_o$ for undercut anchors

$8d_o$ for torque-controlled anchors

$10d_o$ for displacement-controlled anchors

9.2.8.4: For anchors where installation does not produce a splitting force and the anchors will remain untorqued, if the edge distance or spacing is less than that specified in Sec. 9.2.8.1 to 9.2.8.3, calculations shall be performed using a fictitious value of d_o that meets the requirements

of Sec.9.2.8.1 to 9.2.8.3. Calculated forces applied to the anchor shall be limited to values corresponding to an anchor having the fictitious diameter.

9.2.8.5: The value of h_{ef} for an expansion or undercut post-installed anchor shall not exceed the greater of either two thirds of the member thickness or the member thickness less than 4 in.

9.2.8.6: Project drawings and project specifications shall specify use of anchors with a minimum edge distance as assumed in design.

9.2.9 Installation of Anchors: Anchors shall be installed in accordance with the project drawings and specifications.

9.3 CLASSIFICATION OF SHEAR WALLS: Structural concrete *shear walls* that resist *seismic forces* shall be classified in accordance with Sec. 9.3.1 through 9.3.4.

9.3.1 Ordinary Plain Concrete Shear Walls: Ordinary *plain concrete shear walls* are *walls* conforming to the requirements of Chapter 22 of ACI 318.

9.3.2 Detailed Plain Concrete Shear Walls: Detailed *plain concrete shear walls* are *walls* above the *base* conforming to the requirements of Chapter 22 of ACI 318 and containing reinforcement as follows:

Vertical reinforcement of at least 0.20 in.^{2} (129 mm^2) in cross-sectional area shall be provided continuously from support to support at each corner, at each side of each opening, and at the ends of *walls*. The continuous vertical bar required by Sec. 22.6.6.5 of ACI 318 shall be provided.

Horizontal reinforcement at least 0.20 in.^{2} (129 mm^2) in cross-sectional area shall be provided:

a. Continuously at structurally connected roof and floor levels and at the top of *walls*,

b. At the bottom of load-*bearing walls* or in the top of foundations when doweled to the wall, and

c. At a maximum spacing of 120 inches (3050 mm).

Reinforcement at the top and bottom of openings, when used in determining the maximum spacing specified in Item c above, shall be continuous in the wall.

Basement, foundation, or other *walls* below the *base* shall be reinforced as required by Sec. 22.6.6.5 of ACI 318.

9.3.2.1 Ordinary Reinforced Concrete Shear Walls: *Ordinary reinforced concrete shear walls* are *walls* conforming to the requirements of ACI 318 exclusive of Chapters 21 and 22.

9.3.2.2 Special Reinforced Concrete Shear Walls: *Special reinforced concrete shear walls* are *walls* conforming to the requirements of ACI 318 in addition to the requirements for *ordinary reinforced concrete shear walls*.

9.4 SEISMIC DESIGN CATEGORY A: *Structures* assigned to *Seismic Design Category A* may be of any construction permitted in ACI 318 and the *Provisions.*

9.5 SEISMIC DESIGN CATEGORY B: *Structures* assigned to *Seismic Design Category B* shall conform to all the requirements for *Seismic Design Category A* and the additional

requirements for *Seismic Design Category B* of this section and in other chapters of the *Provisions.*

9.5.1 Ordinary Moment Frames: Flexural members of *ordinary moment frames* forming part of the *seismic-force-resisting system* shall be designed in accordance with Sec. 7.13.2 of ACI 318 and at least two main flexural reinforcing bars shall be provided continuously top and bottom throughout the beams, through or developed within exterior columns or *boundary elements*.

Columns of *ordinary moment frames* having a clear height to maximum plan dimension ratio of 5 or less shall be designed for shear in accordance with Sec. 21.10.3 of ACI 318.

9.6 SEISMIC DESIGN CATEGORY C: *Buildings* assigned to *Seismic Design Category* C shall conform to all requirements for *Seismic Design Category* B and to the additional requirements for *Seismic Design Category* C of this section an in other chapters of the Provisions.

9.6.1 Seismic-Force-Resisting Systems: *Seismic-force-resisting systems* shall conform to Sec. 9.6.1.1 and Sec. 9.6.1.2.

9.6.1.1 Moment Frames: All *moment frames* that are part of the *seismic-force-resisting system* shall be *intermediate moment frames* or *special moment frames.*

9.6.1.2 Shear Walls: All *shear walls* that are part of the *seismic-force-resisting system* shall be *ordinary reinforced concrete shear walls* conforming to Sec. 9.3.3 or *special reinforced concrete shear walls* conforming to Sec. 9.3.4.

9.6.2 Discontinuous Members: Columns supporting reactions from discontinuous stiff members such as *walls* shall be designed for special load combinations in Sec. 5.2.7.1 and shall be provided with transverse reinforcement at the spacing s_o as defined in Sec. 21.10.5.1 of ACI 318 over their full height beneath the level at which the discontinuity occurs. This transverse reinforcement shall be extended above and below the column as required in Sec. 21.4.4.5 of ACI 318.

9.6.3 Plain Concrete: Structural *plain concrete* members in *buildings* assigned to *Seismic Design Category* C shall conform to ACI 318 and the additional requirements and limitations of this section.

9.6.3.1 Walls: Structural plain concrete walls are not permitted in structures assigned to *Seismic Design Category* C.

> **Exception:** Structural plain concrete basement, foundation, or other *walls* below the base are permitted in detached one- and two-family dwellings three stories or less in height constructed with stud bearing *walls*. Such *walls* shall have reinforcement in accordance with Sec. 22.6.6.5 of ACI 318.

9.6.3.2 Footings: Isolated footings of *plain concrete* supporting pedestals or columns are permitted provided the projection of the footing beyond the face of the supported member does not exceed the footing thickness.

> **Exception:** In detached one- and two-family dwellings three stories or less in height of light-frame construction, structural plain concrete basement walls, foundation, or other

walls below the basement shall be permitted. Such concrete walls shall have reinforcement in accordance with Sec. 22.6.6.5 of ACI 318.

Plain concrete footings supporting *walls* shall be provided with no less than two continuous longitudinal reinforcing bars. Bars shall not be smaller than No. 4 (#13) and shall have a total area of not less than 0.002 times the gross cross-sectional area of the footing. For footings that exceed 8 in. in thickness, a minimum of one bar shall be provided at the top and bottom of the footing. For foundation systems consisting of plain concrete footing and plain concrete stemwall, a minimum of one bar shall be provided at the top of the stemwall and at the bottom the footing. Continuity of reinforcement shall be provided at corners and intersections.

Exceptions:

1. In detached one- and two-family dwellings three stories or less in height and constructed with stud *bearing walls, plain concrete* footings supporting *walls* shall be permitted without longitudinal reinforcement.
2. Where a slab-on-ground is cast monolithically with the footing, one No. 5 (#16) bar is permitted to be located at either the top or bottom of the footing.

9.6.3.3 Pedestals: *Plain concrete* pedestals shall not be used to resist lateral *seismic forces.*

9.6.4 Anchor Bolts in the Tops of Columns: Anchor bolts that are set in the top of a column shall be provided with ties that completely enclose at least four longitudinal column bars. There shall be at least two No. 4 (#13) or three No. 3 (#10) ties within 5 inches of the top of the column. The ties shall have hooks on each free end that comply with Sec. 7.1.3 of ACI 318.

9.7 SEISMIC DESIGN CATEGORIES D, E, OR F: *Structures* assigned to *Seismic Design Category* D, E, or F shall conform to all of the requirements for *Seismic Design Category* C and to the additional requirements in this section.

9.7.1 Seismic-Force-Resisting Systems: *Seismic-force-resisting systems* shall conform to Sec. 9.7.1.1 and Sec. 9.7.1.2.

9.7.1.1 Moment Frames: All *moment frames* that are part of the *seismic-force-resisting system*, regardless of height, shall be *special moment frames.*

9.7.1.2 Shear Walls: All *shear walls* that are part of the *seismic-force-resisting system* shall be *spacial reinforced concrete shear walls* conforming to Sec. 9.3.4.

9.7.2 Frame Members Not Proportioned to Resist Forces Induced by Earthquake Motions: All frame members assumed not to contribute to lateral forces resistance shall conform to Sec. 21.9 of ACI 318 is modified by Sec. 9.1.1.11 of this chapter.

Appendix to Chapter 9

REINFORCED CONCRETE DIAPHRAGMS CONSTRUCTED USING UNTOPPED PRECAST CONCRETE ELEMENTS

Preface: Reinforced concrete diaphragms constructed using untopped precast concrete elements are permitted in the body of the 2000 *NEHRP Recommended Provisions* for Seismic Design Categories A, B, and C but not for Categories D, E, and F. For the latter the precast elements must be topped and the topping designed as the diaphragm. For resisting seismic forces, a composite-topping slab cast in place on precast concrete elements must have a thickness no less than 2 in. and a topping slab not relying on composite action with the precast elements must have a thickness not less than 2-1/2 in.

There are two principal reasons why a framework for the design of untopped diaphragms for Seismic Design Categories D, E, and F may be desirable. One relates to the performance of topping slab diaphragms in recent earthquakes and the other to durability considerations. The 1997 *Provisions* incorporated ACI 318-95 for which the provisions for topping slab diaphragms on precast elements were essentially the same as those in ACI 318-89. In the 1994 Northridge earthquake, performance was poor for structures where demands on the topping slab diaphragms on precast elements were maximized and the structures had been designed using ACI 318-89. The topping cracked along the edges of the precast elements and the welded wire reinforcement crossing those cracks fractured. The diaphragms became the equivalent of an untopped diaphragm with the connections between precast concrete elements, the connectors, and the chords not detailed for that condition. Another problem found with topping slab diaphragms was that the chords often took the large diameter bars, grouped closely together at the topping slab edge. Under severe loading, these unconfined chord bars lost bond with the concrete and with it, ability to transfer seismic forces.

The 2000 *NEHRP* incorporates ACI 318-99 which recognizes that for topping slab diaphragms a controlling condition is the in-plane shear in concrete along the edges of the precast elements. Ductility is provided by requiring that the topping slab reinforcement crossing the edges be spaced at not less than 10 in. on center. While those requirements are based on best available engineering judgement and evidence, they have not yet been proven to provide adequate safety either by laboratory testing or field performance. Due to the dimensions of the precast element relative to the thickness of the topping slab, it may well be prudent to have seismic provisions for diaphragms incorporating precast elements controlled by untopped diaphragm considerations and to have those provisions modified for topped diaphragms. Further, in geographic areas where corrosive environments are a significant concern, the construction of un-topped diaphragms using "pretopped" precast elements rather than topped elements is desirable.

This appendix provides a compilation of current engineering judgment on a framework for seismic provisions for untopped diaphragms. That framework does not, however, adequately address all the concerns needed for its incorporation into the body of the *Provisions.* This appendix proposes that a diaphragm composed of untopped elements be designed to remain elastic, and that the connectors be designed for limited ductility in the event that design forces are exceeded during earthquake response and some inelastic action occurs when the demands on the diaphragm are maximized. By contrast, for all other systems for Seismic Design Categories D, E and F, the philosophy of the 2000 *NEHRP* is to require significant ductility. For the approach of this appendix, critical issues are how best to define:

1. **The design forces for the diaphragm so that they are large enough to result in essentially elastic behavior when the demands on the diaphragm are maximized or whether that criterion is even achievable;**
2. **The relation between the response of the diaphragm, its dimensions, and the ductility demands on the connectors;**
3. **The ductility changes that occur for connectors under various combinations of in-plane and out-of-plane shear forces and tensile and compressive forces;**
4. **The boundary conditions necessary for testing and for application of the loading for the validation testing of connectors; and**
5. **The constraints on connector performance imposed by their size relative to the size of the diaphragm elements.**

The use of this appendix as a framework for laboratory testing, analyses of the performance of diaphragms in past earthquakes, analytical studies, and trial designs, is encouraged. Users should also consult the *Commentary* for guidance and references. Please direct all feedback on this appendix and its commentary to the BSSC.

9A.1 Background: ACI 318-99 was significantly revised for structural diaphragms to add new detailing provisions in response to the poor performance of some cast-in-place composite topping slab diaphragms during the 1994 Northridge earthquake. New code and commentary Sec. 21.7 and R21.7 were inserted into Chapter 21. In those provisions, cast-in-place composite topping slabs and cast-in-place topping slab diaphragms are permitted but no mention is made of untopped precast diaphragms. The evidence from the recently completed PRESS 5-story building test (*PCI Journal*, November-December 1999), from Italian and English tests (M. J. NM. Priestley, D. Sritharan, J. R. Connley, and S. Pampanin, "Preliminary Results and Conclusions from the PRESSS Five-Story Precast Concrete Test Building," *PCI Journal*, Vol. 44, No. 6, November-December 1999; K. S. Elliott, G. Davies, and W. Omar, "Experimental Hollow-cored Slabs Used as Horizontal Floor Diaphragms," *The Structural Engineer*, Vol. 70, No. 10, May 1922, pp. 175-187; M. Menegotto, Seismic Diaphragm Behavior of Untopped Hollow-Core Floors, *Proceedings*, FIP Congress, Washington, D. C., May 1994), and from the 1999 Turkey earthquake is that such diaphragms can perform satisfactorily if they are properly detailed and if they and their connections remain elastic under the force levels the diaphragms experience. However, further additions are needed to the ACI 318 requirements to make that possible both in

terms of the forces for which diaphragms should be designed and the ductilities that should be inherent in connections as a second line of defense.

In this appendix, the untopped precast diaphragm is designed to remain elastic by requiring that its design forces be based on Eq. 5.2.5.4 and be not less than a minimum value dependent upon the seismic response coefficient, with both values multiplied by the overstrength and redundancy factors associated with the seismic-force-resisting system. In addition, the connections are required to be able to perform in a ductile manner in the unlikely event that the diaphragm is forced to deform inelastically.

9A.2 References: The following references are to be considered part of this appendix to the extent referred to in this document:

ACI 318-99/	American Concrete Institute (ACI), *Building Code Requirements for Structural*
ACI 318-99R	*Concrete,* 1999
ACI ITG/T1.1	American Concrete Institute (ACI), *Acceptance Criteria For Moment Frames, Based on Structural Testing* (An ACI Provisional Standard), ITG/T1.1, 1999
ATC-24	Applied Technology Council (ATC), *Guidelines for Seismic Testing of Components of Steel Structures,* ATC-24, 1992.

9A.3 Untopped Precast Diaphragms:

9A.3.1: An untopped precast floor or roof shall be permitted as a structural diaphragm provided Sec. 9A.3.2 through 9A.3.3 are satisfied. Untopped diaphragms shall not be permitted in structures having plan irregularity Type 4 as defined in *Provisions* Table 5.2.3.2.

9A.3.2: Rational elastic models shall be used to determine the in-plane shear and tension/compression forces acting on connections that cross joints. For any given joint, the connections shall resist the total shear and total moment acting on the joint according to an elastic distribution of stresses

9A.3.3: The diaphragm design force shall be not less than the force calculated from either of the following two criteria:

1. $\rho'\Omega_o$ times the $F_p x$ value calculated from Eq. 5.2.5.4 but not less than $\rho'\Omega_o C_s w_p x$.
2. A shear force corresponding to 1.25 times that for yielding of the *seismic-force-resisting system* calculated using a Φ value of unity.

The overstrength factor, Ω_o, shall be that for the *seismic-force-resisting system* specified in *Provisions* Table 5.2.2 unless derived by analysis of the probable strength of the *seismic-force-resisting system* and shall not be taken as less than 1.25 times the yield strength of that system. The redundancy factor, ρ, shall be as specified in Sec. 5.2.4 and the seismic response coefficient ,C_s, shall be that determined in accordance with *Provisions* Sec. 5.3.2.1.

9A.3.4: For diaphragms in buildings having plan irregularities Type 1a, 1b, 2 or 5 as defined in *Provisions* Table 5.2.3.2, the analysis required by Sec. 9A.3.3 shall explicitly include the effect of such irregularities as required by *Provisions* Sec. 5.2.6.

9A.3.5: Mechanical connections shall have design strength for the body of the connector greater than the factored forces determined in accordance with Sec. 9A.3.3 and 9A.3.4.

9A.3.6: Mechanical connections used at joints shall be shown by analysis and test results to develop, under reversed cyclic loading, the capacity in shear, tension, compression, or a combination as required by the analysis specified in Sec. 9A.3.2. Testing of connections and evaluation of results shall be made in accordance with the principles specified in ACI ITG/T1.1 and ATC-24. Connections shall develop for the specified loading ductility ratios equal to or grater than 2.0. Embedments for connections shall be governed by steel yielding and not by fracture of concrete or welds.

9A.3.7: Connections shall be designed using the strength reduction factors ϕ specified in ACI 318-99 and ACI 318-99R. When the ϕ factor is modified by Sec. 9.3.4 of ACI 318-99 and ACI 318-99R, the modified value shall be used for the diaphragm connections.

9A.3.8: Where the design relies on friction in grouted joints for shear transfer across the joints, shear friction resistance shall be provided by mechanical connectors or reinforcement.

9A.3.9: Cast-in place strips shall be permitted in the end or edge regions of precast *components* as chords or collectors. These strips shall meet the requirements for topping slab diaphragms. The reinforcement in the strips shall conform to 21.7.8.2 and 21.7.8.3 of ACI 318-99 and ACI 318-99R.

9A.3.10: In satisfying the compatibility requirement of *Provisions* Sec. 5.2.2.4.3, the additional deformation that results from the diaphragm flexibility shall be considered. The assumed flexural and shear stiffness properties of the elements that are part of the seismic-force-resisting system shall not exceed one-half of the gross-section properties, unless a rational cracked-section analysis is performed.

9A.3.11: Diaphragms shall have a quality assurance plan satisfying the requirements of *Provisions* Sec. 3.2.1.

9A.3.12: Ties to supporting members and bearing lengths shall satisfy the requirements for design force and geometry characteristics specified for the connections in ACI 318, Sec. 21.2.1.7 as modified by *Provisions* Sec. 9.1.1.4.

Chapter 10

COMPOSITE STEEL AND CONCRETE STRUCTURE DESIGN REQUIREMENTS

10.1 REFERENCE DOCUMENTS: The design, construction, and quality of composite steel and concrete *components* that resist *seismic forces* shall conform to the relevant requirements of the following references except as modified by the provisions of this chapter.

ACI 318	American Concrete Institute (ACI), *Building Code Requirements for Structural Concrete*, 1999, excluding Appendix A (Alternate Design Method) and Chapter 22 (Structural Plain Concrete) and making Appendix C (Alternative Load and Strength Reduction Factors) mandatory
AISC/LRFD	American Institute of Steel Construction (AISC), *Load and Resistance Factor Design Specification for Structural Steel Buildings (LRFD)*, 1999
AISC Seismic	American Institute of Steel Construction (AISC), *Seismic Provisions for Structural Steel Buildings*, including Supplement No. 1, July 1997, Parts I and II
AISI	American Iron and Steel Institute (AISI), *Specification for the Design of Cold-Formed Steel Structural Members*, 1996, including Supplement 2000, excluding ASD provisions

10.1.1: When using ACI 318, Appendix A and Chapter 22 are excluded and Appendix C is mandatory.

10.2 REQUIREMENTS: An *R* factor as set forth in Table 5.2.2 for the appropriate composite steel and concrete system is permitted when the *structure* is designed and detailed in accordance with the provisions of AISC Seismic, Part II.

In *Seismic Design Categories* B and above, the design of such systems shall conform to the requirements of AISC Seismic, Part II. Composite *structures* are permitted in *Seismic Design Categories* D and above, subject to the limitations in Table 5.2.2, when substantiating evidence is provided to demonstrate that the proposed system will perform as intended by AISC Seismic Part II.. The substantiating evidence shall be subject to the approval of the authority having jurisdiction. Where composite elements or connections are required to sustain inelastic deformations, the substantiating evidence shall be based upon cyclic testing.

Chapter 11

MASONRY STRUCTURE DESIGN REQUIREMENTS

11.1 GENERAL:

11.1.1 Scope: The design and construction of reinforced and plain (unreinforced) masonry *components* and systems and the materials used therein shall comply with the requirements of this chapter.

11.1.2 Reference Documents: The designation and title of documents cited in this chapter are listed in this section.

ACI 318 American Concrete Institute (ACI), *Building Code Requirements for Structural Concrete*, excluding Appendix A, 1999

ACI 530 American Concrete Institute (ACI), Building Code Requirements for Masonry Structures, ACI 530/ASCE 5/TMS 402, 1999

ACI 530.1 American Concrete Institute (ACI), *Specifications for Masonry Structures*, ACI 530.1/ASCE 6/TMS 602, 1999

Compliance with specific provisions of ACI 530 is mandatory where required by this chapter.

11.1.3 Definitions:

Anchor: Metal rod, wire, bolt, or strap that secures masonry to its structural support.

Area:

Gross Cross-Sectional Area: The area delineated by the out-to-out specified dimensions of masonry in the plane under consideration.

Net Cross-Sectional Area: The area of masonry units, grout, and mortar crossed by the plane under consideration based on out-to-out specified dimensions.

Bed Joint: The horizontal layer of mortar on which a masonry unit is laid.

Backing: The *wall* surface to which *veneer* is secured. The backing can be concrete, masonry, steel framing, or wood framing.

Cleanout: An opening to the bottom of a grout space of sufficient size and spacing to allow removal of debris.

Collar Joint: Vertical longitudinal joint between wythes of masonry or between masonry wythe and back-up construction which is permitted to be filled with mortar or grout.

Column: An isolated vertical member whose horizontal dimension measured at right angles to the thickness does not exceed three times its thickness and whose height is at least three times its thickness.

Composite Masonry: Multiwythe masonry members acting with composite action.

Connector: A mechanical device (including anchors, *wall* ties, and fasteners) for joining two or more pieces, parts, or members.

Cover: Distance between surface of reinforcing bar and edge of member.

Detailed Plain Masonry Shear Wall: A masonry *shear wall* designed to resist lateral forces neglecting stresses in reinforcement and designed in accordance with Sec. 11.10.2.

Dimension:

Actual Dimension: The measured dimension of a designated item (e.g., a designated masonry unit or *wall*).

Nominal Dimension: The specified dimension plus an allowance for the joints with which the units are to be laid. Nominal dimensions are usually given in whole numbers. Thickness is given first, followed by height and then length.

Specified Dimension: The dimension specified for the manufacture or construction of masonry, masonry units, *joints*, or any other *component* of a *structure*.

Effective Height: For braced members, the effective height is the clear height between lateral supports and is used for calculating the slenderness ratio. The effective height for unbraced members is calculated in accordance with engineering mechanics.

Effective Period: Fundamental period of the structure based on cracked stiffness.

Glass Unit Masonry: Nonload-bearing masonry composed of glass units bonded by mortar.

Head Joint: Vertical mortar joint between masonry units within the wythe at the time the masonry units are laid.

Intermediate Reinforced Masonry Shear Wall: A masonry *shear wall* designed to resist lateral forces considering stresses in reinforcement and designed in accordance with Sec. 11.10.4.

Masonry Unit:

Hollow Masonry Unit: A masonry unit whose net cross-sectional area in every plane parallel to the bearing surface is less than 75 percent of the gross cross-sectional area in the same plane.

Solid Masonry Unit: A masonry unit whose net cross-sectional area in every plane parallel to the bearing surface is 75 percent or more of the gross cross-sectional area in the same plane.

Ordinary Plain Masonry Shear Wall: A masonry *shear wall* designed to resist lateral forces neglecting stresses in reinforcement and designed in accordance with Sec. 11.10.1.

Ordinary Reinforced Masonry Shear Wall: A masonry *shear wall* designed to resist lateral forces considering stresses in reinforcement and designed in accordance with Sec. 11.10.3.

Plain Masonry: Masonry in which the tensile resistance of the masonry is taken into consideration and the effects of stresses in reinforcement are neglected.

Plastic Hinge: The zone in a structural member in which the yield moment is anticipated to be exceeded under loading combinations that include earthquake.

Reinforced Masonry: Masonry construction in which reinforcement acts in conjunction with the masonry to resist forces.

Running Bond: The placement of masonry units such that head *joints* in successive courses are horizontally offset at least one-quarter the unit length.

Special Reinforced Masonry Shear Wall: A masonry *shear wall* designed to resist lateral forces considering stresses in reinforcement and designed in accordance with Sec. 11.10.5.

Specified: Required by *construction documents.*

Specified Compressive Strength of Masonry, f'_m : Required compressive strength (expressed as force per unit of net cross-sectional area) of the masonry. Whenever the quantity f'_m is under the radical sign, the square root of numerical value only is intended and the result has units of pounds per square inch (MPa).

Stack Bond: Stack bond is other than running bond. Usually, the placement of units is such that the head *joints* in successive courses are aligned vertically.

Stirrup: Shear reinforcement in a beam or flexural member.

Strength:

Design Strength: *Nominal strength* multiplied by a strength reduction factor.

Nominal Strength: *Strength* of a member or cross section calculated in accordance with these provisions before application of any strength reduction factors.

Required Strength: *Strength* of a member or cross section required to resist factored loads.

Tie:

Lateral Tie: Loop of reinforcing bar or wire enclosing longitudinal reinforcement.

Wall Tie: A connector that joins wythes of masonry *walls* together.

Veneer:

Masonry Veneer: A masonry wythe that provides the exterior finish of a *wall* system and transfers out-of-plane load directly to a backing but that is not considered to add load-resisting capacity to the *wall* system.

Anchored Veneer: Masonry *veneer* secured to and supported laterally by the backing through anchors and supported vertically by the foundation or other structural support.

Adhered Veneer: Masonry *veneer* secured to and supported by the backing through adhesion.

Wall: A vertical element with a horizontal length at least three times its thickness.

Wall Frame: A moment resisting frame of masonry beams and masonry columns within a plane with special reinforcement details and connections that provides resistance to lateral and *gravity loads*.

Wythe: A continuous vertical section of a *wall*, one masonry unit in thickness.

11.1.4 Notations:

A_b = cross-sectional area of an anchor bolt, in.^{2} (mm^2).

A_n = net cross-sectional area of masonry, in.^{2} (mm^2).

A_p = projected area on the masonry surface of a right circular cone for anchor bolt allowable shear and tension calculations, in.^{2} (mm^2).

A_s = cross-sectional area of reinforcement, in.^{2} (mm^2).

A_v = cross-sectional area of shear reinforcement, in.^{2} (mm)^2

a = length of compressive stress block, in. (mm).

B_a = design axial strength of an anchor bolt, lb (N).

B_v = design shear strength of an anchor bolt, lb (N).

b_a = factored axial force on an anchor bolt, lb (N).

b_v = factored shear force on an anchor bolt, lb (N).

b_w = web width, in. (mm).

C_d = deflection amplification factor as given in Table 5.2.2.

c = distance from the fiber of maximum compressive strain to the neutral axis, in. (mm).

d_b = diameter of reinforcement, in. (mm).

d_{bb} = diameter of the largest beam longitudinal reinforcing bar passing through, or anchored in, the wall frame beam-*column* intersection, in. (mm).

d_{bp} = diameter of the largest *column* (pier) longitudinal reinforcing bar passing through, or anchored in, the wall frame beam-column intersection, in. (mm).

d_v = length of member in direction of shear force, in. (mm).

E_m = modulus of elasticity of masonry, psi (MPa).

E_s = modulus of elasticity of reinforcement, psi (MPa).

E_v = modulus of rigidity of masonry, psi (MPa).

f_g = specified compressive *strength* of grout, psi (MPa).

f'_m = specified compressive *strength* of masonry at the age of 28 days, unless a different age is specified, psi (MPa).

f_r = modulus of rupture of masonry, psi (MPa).

f_y = specified yield *strength* of the reinforcement or the anchor bolt as applicable, psi (MPa).

h = effective height of a *column*, pilaster or *wall*, in. (mm).

h_n = height of *structure* above the *base* level to level *n*, ft. (m).

h_b = beam depth in the plane of the *wall frame*, in. (mm).

h_c = cross-sectional dimension of grouted core of wall frame member measured center to center of confining reinforcement, in. (mm).

h_p = pier depth in the plane of the wall frame, in. (mm).

I_{cr} = moment of inertia of the cracked section, in.^{4} (mm^4).

I_{eff} = effective moment of inertia, in.^{4} (mm^4).

I_n = moment of inertia of the net cross-sectional area of a member, in.^{4} (mm^4).

L_c = length of coupling beam between coupled *shear walls*, in. (mm).

l_b = effective embedment length of anchor bolt, in. (mm).

l_{be} = anchor bolt edge distance, in. (mm).

l_d = development length, in. (mm).

l_{dh} = equivalent development length for a standard hook, in. (mm).

l_{ld} = minimum lap splice length, in. (mm).

M = moment on a masonry section due to unfactored load, in.-lb (N-mm).

M_a = maximum moment in member due to the applied loading for which deflection is computed, in.-lb (N-mm).

M_{cr} = cracking moment strength of the masonry, in.-lb (N-mm).

M_d = design moment strength, in.-lb (N-mm).

M_u = required flexural strength due to factored loads, in.-lb (N-mm).

M_1, M_2 = nominal moment strength at the ends of the coupling beam, in.-lb (N-mm).

N_v = force acting normal to shear surface, lb (N).

P = axial force on a masonry section due to unfactored loads, lb (N).

P_n = nominal axial load strength, lb (N).

P_u = required axial strength due to factored loads, lb (N).

r = radius of gyration, in. (mm).

S = section modulus based on net cross-sectional area of a *wall*, in.^{3} (mm^3).

s = spacing of lateral reinforcement in wall frame members, in. (mm).

t = specified *wall* thickness dimension or least lateral dimension of a column, in. (mm).

V = shear on a masonry section due to unfactored loads, lb (N).

V_g = unfactored shear force due to gravity loads, lb (N).

V_m = shear strength provided by masonry, lb (N).

V_n = nominal shear strength, lb (N).

V_s = shear strength provided by shear reinforcement, lb (N).

V_u = required shear strength due to factored loads, lb (N).

$)$ = design story drift as determined in Sec. 5.3.7.1, in. (mm).

$)_a$ = allowable story drift as specified in Sec. 5.2.8, in. (mm).

$*_{max}$ = the maximum displacement at level x, in. (mm).

D = ratio of the area of reinforcement to the net cross-sectional area of masonry in a plane perpendicular to the reinforcement.

D_b = reinforcement ratio producing balanced strain conditions.

$,_{mu}$ = maximum usable compressive strain of masonry, in./in. (mm/mm).

N = strength reduction factor.

11.2 CONSTRUCTION REQUIREMENTS:

11.2.1 General: Masonry shall be constructed in accordance with the requirements of ACI 530.1. Materials shall conform to the requirements of the standards referenced in ACI 530.1.

11.2.2 Quality Assurance: Inspection and testing of masonry materials and construction shall comply with the requirements of Chapter 3.

11.3 GENERAL REQUIREMENTS:

11.3.1 Scope: Masonry *structures* and *components* of masonry *structures* shall be designed in accordance with the requirements of reinforced masonry design, plain (unreinforced) masonry design, empirical design or design for architectural *components* of masonry subject to the limitations of this

section. All masonry walls, unless isolated on three sides from in-plane motion from the basic structural system, shall be designed as shear walls. For design of glass-unit masonry and masonry veneer, see Sec. 11.12

11.3.2 Empirical Masonry Design: The requirements of Chapter 5 of ACI 530.1 shall apply to the empirical design of masonry.

11.3.3 Plain (Unreinforced) Masonry Design:

11.3.3.1: In the design of plain (unreinforced) masonry members, the flexural tensile strength of masonry units, mortar and grout in resisting design loads shall be permitted.

11.3.3.2: In the design of plain masonry members, stresses in reinforcement shall not be considered effective in resisting design loads.

11.3.3.3: Plain masonry members shall be designed to remain uncracked.

11.3.4 Reinforced Masonry Design: In the design of reinforced masonry members, stresses in reinforcement shall be considered effective in resisting design loads.

11.3.5 Seismic Design Category A: *Structures* assigned to *Seismic Design Category* A shall comply with either the requirements of Sec. 11.3.2 (empirical masonry design), Sec. 11.3.3 (plain masonry design), or Sec. 11.3.4 (reinforced masonry design).

11.3.6 Seismic Design Category B: *Structures* assigned to *Seismic Design Category* B shall conform to all the requirements for *Seismic Design Category* A and the lateral-force-resisting system shall be designed in accordance with Sec. 11.3.3 or Sec. 11.3.4.

11.3.7 Seismic Design Category C: *Structures* assigned to *Seismic Design Category* C shall conform to the requirements for *Seismic Design Category* B and to the additional requirements of this section.

11.3.7.1 Material Requirements: Structural clay load-bearing wall tile shall not be used as part of the basic structural system.

11.3.7.2 Masonry Shear Walls: Masonry *shear walls* shall comply with the requirements for *detailed plain masonry shear walls* (Sec. 11.10.2), *intermediate reinforced masonry shear walls* (Sec. 11.10.4), or *special reinforced masonry shear walls* (Sec. 11.10.5).

11.3.7.3 Minimum Wall Reinforcement: Vertical reinforcement of at least 0.20 in.^{2} (129 mm^2) in cross-sectional area shall be provided continuously from support to support at each corner, at each side of each opening, at the ends of walls, and at a maximum spacing of 4 feet (1219 mm) apart horizontally throughout the walls. Horizontal reinforcement not less than 0.20 in.^{2} (129 mm^2) in cross section shall be provided as follows:

a. At the bottom and top of wall openings extending not less than 24 in. (610 mm) nor less than 40 bar diameters past the opening,

b. Continuously at structurally connected roof and floor levels and at the top of walls,

c. At the bottom of load-bearing walls or in the top of foundations when doweled to the wall, and

d. At maximum spacing of 120 in. (3048 mm) unless uniformly distributed joint reinforcement is provided.

Reinforcement at the top and bottom of openings, when used in determining the maximum spacing specified in Item d above, shall be continuous in the wall.

11.3.7.4 Stack Bond Construction: Where stack bond is used, the minimum horizontal reinforcement shall be 0.0007 times the gross cross-sectional area of the wall. This requirement shall be satisfied with uniformly distributed joint reinforcement or with horizontal reinforcement spaced not over 48 in. (1219 mm) and fully embedded in grout or mortar.

11.3.7.5 Multiple Wythe Walls Not Acting Compositely: At least one wythe of a cavity *wall* shall be reinforced masonry designed in accordance with Sec. 11.3.4. The other wythe shall be reinforced with a minimum of one W1.7 wire per 4-in. (102 mm) nominal wythe thickness and spaced at intervals not exceeding 16 in. (406 mm). The wythes shall be tied in accordance with ACI 530, Sec. 5.8.3.2.

11.3.7.6 Walls Separated from the Basic Structural System: Masonry *walls*, laterally supported perpendicular to their own plane but otherwise structurally isolated on three sides from the basic structural system, shall have minimum horizontal reinforcement of 0.0007 times the gross cross-sectional area of the *wall*. This requirement shall be satisfied with uniformly distributed joint reinforcement or with horizontal reinforcement spaced not over 48 in. (1219 mm) and fully embedded in grout or mortar. Architectural *components* of masonry shall be exempt from this reinforcement requirement.

11.3.7.7 Connections to Masonry Columns: Structural members framing into or supported by masonry columns shall be anchored thereto. Anchor bolts located in the tops of columns shall be set entirely within the reinforcing cage composed of column bars and lateral ties. A minimum of two No. 4 (13 mm) lateral ties shall be provided in the top 5 inches (127 mm) of the column.

11.3.8 Seismic Design Category D: *Structures* assigned to *Seismic Design Category* D shall conform to all of the requirements for *Seismic Design Category* C and the additional requirements of this section.

11.3.8.1 Material Requirements: Neither Type N mortar nor masonry cement shall be used as part of the basic structural system.

11.3.8.2 Masonry Shear Walls: Masonry *shear walls* shall comply with the requirements for *special reinforced masonry shear walls* (Sec. 11.10.5)

11.3.8.3 Minimum Wall Reinforcement: All walls shall be reinforced with both vertical and horizontal reinforcement. The sum of the areas of horizontal and vertical reinforcement shall be at least 0.002 times the gross cross-sectional area of the wall and the minimum area of reinforcement in each direction shall not be less than 0.0007 times the gross cross-sectional area of the wall. The spacing of reinforcement shall not exceed 48 in. (1219 mm). Except for joint reinforcement, the bar size shall not be less than a No. 3 (10-mm diameter). Reinforcement shall be continuous around wall corners and

through intersections, unless the intersecting walls are separated. Only horizontal reinforcement that is continuous in the wall or element shall be included in computing the area of horizontal reinforcement. Reinforcement spliced in accordance with Sec. 11.4.5.6 shall be considered as continuous reinforcement. Architectural *components* of masonry shall be exempt from this reinforcement requirement.

11.3.8.4 Stack Bond Construction: Where masonry is laid in stack bond, the minimum amount of horizontal reinforcement shall be 0.0015 times the gross cross-sectional area of the wall. If open-end units are used and grouted solid, the minimum amount of horizontal reinforcement shall be 0.0007 times the gross cross-sectional area of the wall. The maximum spacing of horizontal reinforcement shall not exceed 24 in. (610 mm). Architectural *components* of masonry shall be exempt from these requirements.

11.3.8.5 Minimum Wall Thickness: The nominal thickness of masonry bearing *walls* shall not be less than 6 in. (152 mm). Nominal 4-in. (102 mm) thick load-bearing reinforced hollow clay unit masonry *walls* with a maximum unsupported height or length to thickness ratio of 27 are permitted to be used provided the net area unit strength exceeds 8,000 psi (55 MPa), units are laid in *running bond*, bar sizes do not exceed No. 4 (13 mm) with not more than two bars or one splice in a cell, and joints are not raked.

11.3.8.6 Minimum Column Reinforcement: Lateral ties in columns shall be spaced not more than 8 in. (203 mm) on center for the full height of the column. Lateral ties shall be embedded in grout and shall be No. 3 (10 mm) or larger.

11.3.8.7 Minimum Column Dimension: The nominal dimensions of a masonry column shall not be less than 12 in. (305 mm).

11.3.8.8: Separation Joints: Where concrete abuts structural masonry and the joint between the materials is not designed as a separation joint, the concrete shall be roughened so that the average height of aggregate exposure is 1/8 in. (3 mm) and shall be bonded to the masonry in accordance with these requirements as if it were masonry. Vertical joints not intended to act as separation joints shall be crossed by horizontal reinforcement as required by Sec. 11.3.8.3.

11.3.9 Seismic Design Categories E and F: *Structures* assigned to *Seismic Design Categories* E and F shall conform to the requirements of *Seismic Design Category* D and to the additional requirements and limitations of this section.

11.3.9.1 Material Requirements: Construction procedures or admixtures shall be used to minimize shrinkage of grout and to maximize bond between reinforcement, grout, and units.

11.3.9.2 Masonry Shear Walls: Masonry shear walls shall comply with the requirements for *special reinforced masonry shear walls* (Sec. 11.10.5).

11.3.9.3 Stack Bond Construction: Masonry laid in stack bond shall conform to the following requirements:

11.3.9.3.1: For masonry that is not part of the basic structural system, the minimum ratio of horizontal reinforcement shall be 0.0015 and the maximum spacing of horizontal reinforcement shall be 24 in. (610

mm). For masonry that is part of the basic structural system, the minimum ratio of horizontal reinforcement shall be 0.0025 and the maximum spacing of horizontal reinforcement shall be 16 in. (406 mm). For the purpose of calculating this ratio, joint reinforcement shall not be considered.

11.3.9.3.2: Reinforced hollow unit construction shall be grouted solid and all *head joints* shall be made solid by the use of open end units.

11.3.10 Properties of Materials:

11.3.10.1 Steel Reinforcement Modulus of Elasticity: Unless otherwise determined by test, steel reinforcement modulus of elasticity, E_s, shall be taken to be 29,000,000 psi (200,000 MPa).

11.3.10.2 Masonry Modulus of Elasticity: The modulus of elasticity of masonry. E_m, shall be determined in accordance with Eq. 11.3.10.2 or shall be based on the modulus of elasticity determined by prism test and taken between 0.05 and 0.33 times the masonry prism strength:

$$E_m = 750 f'_m \qquad (11.3.10.2)$$

where E_m = modulus of elasticity of masonry (psi) and f'_m = *specified compressive strength of masonry*, psi. The metric equivalent of Eq. 11.3.10.2 is the same except that E_m and f'_m are in MPa.

11.3.10.3: The modulus of rigidity of masonry, E_v, shall be taken equal to 0.4 times the modulus of elasticity of masonry, E_m.

11.3.10.4 Masonry Compressive Strength:

11.3.10.4.1: The specified compressive strength of masonry, f'_m, shall equal or exceed 1,500 psi (10 MPa).

11.3.10.4.2: The value of f'_m used to determine *nominal strength* values in this chapter shall not exceed 4,000 psi (28 MPa) for concrete masonry and shall not exceed 6,000 psi (41 MPa) for clay masonry.

11.3.10.5 Modulus of Rupture:

11.3.10.5.1 Out-of-Plane Bending: The modulus of rupture, f_r, for masonry elements subjected to out-of-plane bending shall be taken from Table 11.3.10.5.1.

TABLE 11.3.10.5.1 Modulus of Rupture for Out-of-Plane Bending (f_r)

Masonry type	Mortar types, psi (MPa)			
	Portland cement/lime		Masonry cement and air-entrained Portland cement/lime	
	M or S	N	M or S	N
Normal to bed *joints*				
Solid units	80 (0.55)	60 (0.41)	48 (0.33)	30 (0.21)
Hollow units[a]				
Ungrouted	50 (0.34)	38 (0.26)	30 (0.21)	18 (0.12)
Fully grouted	136 (0.94)	116 (0.80)	82 (0.57)	52 (0.36)
Parallel to bed *joints* in running bond				
Solid units	160 (1.10)	120 (0.83)	96 (0.66)	60 (0.41)
Hollow units				
Ungrouted and partially grouted	100 (0.69)	76 (0.52)	60 (0.41)	38 (0.26)
Fully grouted (running bond masonry)	160 (1.10)	120 (0.83)	96 (0.66)	60 (0.41)
Parallel to bed *joints* in stack bond:	0	0	0	0

[a] For partially grouted masonry, modulus of rupture values shall be determined on the basis of linear interpolation between hollow units that are fully grouted and hollow units that are ungrouted based on amount (percentage) of grouting.

11.3.10.5.2 In-Plane Bending: The modulus of rupture, f_r, for masonry elements subjected to in-plane forces shall be taken as 250 psi (1.7MPa). For grouted *stack bond* masonry, tension parallel to the bed *joints* for in-plane bending shall be assumed to be resisted only by the continuous grout core section.

11.3.10.6 Reinforcement Strength: Masonry design shall be based on a reinforcement strength equal to the specified yield strength of reinforcement, f_y, that shall not exceed 60,000 psi (400 MPa).

11.3.11 Section Properties:

11.3.11.1: Member strength shall be computed using section properties based on the minimum net bedded and grouted cores cross-sectional area of the member under consideration.

11.3.11.2: Section properties shall be based on specified dimensions.

11.3.12 Headed and Bent-Bar Anchor Bolts: All bolts shall be grouted in place with at least 1 in. (25 mm) grout between the bolt and masonry, except that 1/4-inch (6.4 mm) bolts may be placed in bed joints that are at least 1/2 in. (12.7 mm) in thickness.

11.3.12.1: The design axial strength, B_a, for headed *anchor* bolts embedded in masonry shall be the lesser of Eq. 11.3.12.1-1 (strength governed by masonry breakout) or Eq. 11.3.12.1-2 (strength governed by steel):

$$B_a = A_b f_y \qquad (11.3.12.1\text{-}2)$$

$$B_a = 4 \quad A_p \sqrt{f'_m} \qquad (11.3.12.1\text{-}1)$$

where:

B_a = design axial strength of the headed anchor bolt, lb;

N = strength reduction factor where N = 0.5 for Eq. 11.3.12.1-1 and N = 0.9 for Eq. 11.3.12.1-2;

A_p = projected area on the masonry surface of a right circular cone, in.^{2};

A_b = effective tensile stress area of the headed anchor bolt, in.^{2};

f'_m = specified compressive strength of the masonry, psi; and

f_y = specified yield strength of the headed anchor bolt, psi.

The metric equivalent of Eq. 11.3.12.1-1 is $B_a = (0.33 A_p \sqrt{f'_m})$ where B_a is in N, A_p is in mm^2, and f'_m is in MPa. The metric equivalent of Eq. 11.3.12.1-2 is the same except that B_a is in N, A_b is in mm^2, and f_y is in MPa.

11.3.12.1.1: The area A_p in Eq. 11.3.12.1-1 shall be the lesser of Eq. 11.3.12.1.1-1 or Eq. 11.3.12.1.1-2:

$$A_p = R_b^2 \qquad (11.3.12.1.1\text{-}1)$$

$$A_p = R_{be}^2 \qquad (11.3.12.1.1\text{-}2)$$

where:

A_p = projected area on the masonry surface of a right circular cone, in.^{2};

l_b = effective embedment length of the headed anchor bolt, in.; and

l_{be} = *anchor* bolt edge distance, in..

The metric equivalents of Eq. 11.3.12.1.1-1 and Eq. 11.3.12.1.1-2 are the same except that A_p is in mm^2 and l_b and l_{be} are in mm.

Where the projected areas, A_p, of adjacent headed anchor bolts overlap, the projected area, A_p, of each bolt shall be reduced by one-half of the overlapping area. That portion of the projected area falling in an open cell or core shall be deducted from the value of A_p calculated using Eq. 11.3.12.1.1-1 or Eq. 11.3.12.1.1-2, whichever is less.

11.3.12.1.2: The effective embedment length of a headed bolt, l_b, shall be the length of embedment measured perpendicular from the surface of the masonry to the head of the *anchor* bolt.

11.3.12.1.3: The minimum effective embedment length of headed anchor bolts resisting axial forces shall be 4 bolt diameters or 2 in. (51 mm), whichever is greater.

11.3.12.2: The design axial strength, B_a,, for bent-bar anchor bolts (J- or L-bolts) embedded in masonry shall be the least of Eq. 11.3.12.2-1 (strength governed by masonry breakout), Eq. 11.3.12.2-2 (strength governed by steel), or Eq. 11.3.12.2-3 (strength governed by anchor pullout):

$$B_a = 4 \quad A_p \sqrt{f'_m} \qquad (11.3.12.2\text{-}1)$$

$$B_a = A_b f_y \qquad (11.3.12.2\text{-}2)$$

$$B_a = 1.5 \quad f'_m e d_b + 200 \left(l_b + e + d_b\right) d_b \qquad (11.3.12.2\text{-}3)$$

where:

B_a = design axial strength of the bent-bar anchor bolt, lb;

N = strength reduction factor where N = 0.5 for Eq. 11.3.12.2-1, N = 0.9 for Eq. 11.3.12.2-2, and N = 0.65 for Eq. 11.3.12.2-3;

A_p = projected area on the masonry surface of a right circular cone, in.^{2};

A_b = effective tensile stress area of the bent-bar anchor bolt, in.^{2};

e = projected leg extension of bent-bar anchor bolt, measured from inside edge of *anchor* at bend to farthest point of anchor in the plane of the hook, in.; shall not be taken larger than $2d_b$ for use in Eq. 11.3.12.2-3.

d_b = nominal diameter of bent-bar anchor bolt, in.

l_b = effective embedment length of bent-bar anchor bolt, in.

f'_m = specified compressive strength of the masonry, psi;

f_y = specified yield strength of the bent-bar anchor bolt, psi.

The metric equivalent of Eq. 11.3.12.2-1 is:

$$B_a = 0.33 \quad A_p\sqrt{f'_m}$$

where B_a is in N, A_p is in mm^2, and f'_m is in MPa. The metric equivalent of Eq. 11.3.12.2-2 is the same except that B_a is in N, A_b is in mm^2, and f_y is in MPa. The metric equivalent of Eq. 11.3.12.2-3 is:

$$B_a = 1.5 \quad f'_m e d_b + 2.05 \quad (l_b + e + d_b) d_b$$

where B_a is in N, e and d_b are in mm, and f'_m is in MPa.

The second term in Eq. 11.3.12.2-3 shall be included only if continuous special inspection is provided during placement per Sec. 11.3.5.2.

11.3.12.2.1: The area A_p in Eq. 11.3.12.2-1 shall be the lesser of Eq.11.3.12.2.1-1 or Eq. 11.3.12.2.1-2:

$$A_p = l_b^2 \qquad (11.3.12.2.1\text{-}1)$$

$$A_p = l_{be}^2 \qquad (11.3.12.2.1\text{-}2)$$

where:

A_p = projected area on the masonry surface of a right circular cone, in.^{2};

l_b = effective embedment length of the bent-bar anchor bolt, in.; and

l_{be} = anchor bolt edge distance, in..

The metric equivalents of Eq. 11.3.12.2.1-1 and Eq. 11.3.12.2.1-2 are the same except that A_p is in mm^2 and l_b and l_{be} are in mm.

Where the projected areas, A_p, of adjacent bent-bar anchor bolts overlap, the projected area, A_p, of each bolt shall be reduced by one-half of the overlapping area. That portion of the projected area falling in an open cell or core shall be deducted from the value of A_p calculated using Eq. 11.3.12.2.1-1 or Eq. 11.3.12.2.1-2, whichever is less.

11.3.12.2.2: The effective embedment of a bent-bar anchor bolt, l_b , shall be the length of embedment measured perpendicular from the surface of the masonry to the bearing surface of the bent end, minus one anchor bolt diameter.

11.3.12.2.3: The minimum effective embedment length of bent-bar anchor bolts resisting axial forces shall be 4 bolt diameters or 2 in. (51 mm), whichever is greater.

11.3.12.3: Where the anchor bolt edge distance, l_{be}, equals or exceeds 12 bolt diameters, the design shear strength, B_v, shall be the lesser of the values given by Eq. 11.3.12.3-1 (strength governed by masonry) or Eq. 11.3.12.3-2 (strength governed by steel):

$$B_v = 1750 \sqrt[4]{f'_m A_b} \qquad (11.3.12.3\text{-}1)$$

$$B_v = 0.6 \quad A_b f_y \qquad (11.3.12.3\text{-}2)$$

where:

N = strength reduction factor where N = 0.5 for Eq. 11.3.12.3-1 and N = 0.9 for Eq. 11.3.12.3-2;

A_b = effective tensile stress area of the anchor bolt, in.^{2};

f'_m = specified compressive strength of the masonry, psi, and

f_y = specified yield strength of anchor bolt as applicable, psi.

The metric equivalent of Eq. 11.3.12.3-1 is $B_v = 5350 \sqrt[4]{f'_m A_b}$ where A_b is in mm^2 and f'_m and f_y are in MPa. The metric equivalent of Eq. 11.3.12.3-2 is the same as that above except that A_b is in mm^2 and f_y is in MPa.

Where the anchor bolt edge distance, l_{be}, is less than 12 bolt diameters, the value of B_v in Eq. 11.3.12.3-1 shall be reduced by linear interpolation to zero at an l_{be} distance of 1 in. (25 mm).

11.3.12.4: Anchor bolts subjected to combined shear and tension shall be designed to satisfy Eq. 11.3.12.4:

$$\frac{b_a}{B_a} + \frac{b_v}{B_v} \# 1 \qquad (11.3.12.4)$$

where:

b_a = design axial force on the anchor bolt, lb (N);

B_a = design axial strength of the anchor bolt, lb (N);

b_v = design shear force on the anchor bolt, lb (N); and

B_v = design shear strength of the anchor bolt, lb (N).

11.4 DETAILS OF REINFORCEMENT:

11.4.1 General:

11.4.1.1: Details of reinforcement shall be shown on the contract documents.

11.4.1.2: Reinforcing bars shall be embedded in grout.

11.4.2 Size of Reinforcement:

11.4.2.1: Reinforcing bars used in masonry shall not be larger than a No. 9 bar (29 mm diameter). The bar diameter shall not exceed one-eighth of the nominal *wall* thickness and shall not exceed one-quarter of the least clear dimension of the cell, course, or collar joint in which it is placed. The area of reinforcing bars placed in a cell, or in a course, of hollow unit construction shall not exceed 4 percent of the cell area.

11.4.2.2: Longitudinal and cross wire joint reinforcement shall be a minimum W1.1 (0.011 mm^2) and shall not exceed one-half the joint thickness.

11.4.3 Placement Limits for Reinforcement:

11.4.3.1: The clear distance between parallel reinforcing bars shall not be less than the nominal diameter of the bars nor less than 1 in. (25 mm).

11.4.3.2: In columns and pilasters, the clear distance between vertical reinforcing bars shall not be less than one and one-half times the nominal bar diameter, nor less than 1-1/2 in. (38 mm).

11.4.3.3: The clear distance limitations between reinforcing bars also shall apply to the clear distance between a contact lap splice and adjacent splices or bars.

11.4.3.4: Reinforcing bars shall not be bundled.

11.4.4 Cover for Reinforcement:

11.4.4.1: Reinforcing bars shall have a minimum thickness of masonry and grout cover not less than 2-1/2 d_b nor less than the following:

a. Where the masonry face is exposed to earth or weather, 2 in. (51 mm) for bars larger than No. 5 (16 mm) and 1-1/2 in. (38 mm) for No. 5 (16 mm) bar or smaller.

b. Where the masonry is not exposed to earth or weather, 1-1/2 in. (38 mm).

11.4.4.2: The minimum grout thickness between reinforcing bars and masonry units shall be 1/4 in. (6 mm) for fine grout or 1/2 in. (12 mm) for coarse grout.

11.4.4.3: Longitudinal wires of joint reinforcement shall be fully embedded in mortar or grout with a minimum cover of 1/2 in. (13 mm) when exposed to earth or weather and 3/8 in. (10 mm) when not exposed to earth or weather. Joint reinforcement in masonry exposed to earth or weather shall be corrosion resistant or protected from corrosion by coating.

11.4.4.4: *Wall* ties, anchors, and inserts, except anchor bolts not exposed to the weather or moisture, shall be protected from corrosion.

11.4.5 Development of Reinforcement:

11.4.5.1 General: The calculated tension or compression in the reinforcement where masonry reinforcement is anchored in concrete shall be developed in the concrete by embedment length, hook or mechanical device, or a combination thereof. Hooks shall be used only to develop bars in tension.

11.4.5.2 Development of Reinforcing Bars and Wires in Tension: The development length, l_d, of reinforcing bars and wire shall be determined by Eq. 11.4.5.2 but shall not be less than 12 in. (305 mm) for bars and 6 in. (152 mm) for wire:

$$l_d = \left(\frac{1}{f}\right)\left(\frac{0.13 d_b^2 f_y g}{K\sqrt{f_m^{'}}}\right) \qquad (11.4.5.2)$$

where:

l_d = development length, in.;

f = strength reduction factor as given in Table 11.5.3;

d_b = diameter of the reinforcement, in.;

K = the least of the clear spacing between adjacent reinforcement, the cover of masonry and grout to the reinforcement, or 5 times d_b, in.;

f'_m = specified compressive strength of masonry, psi;

f_y = specified yield strength of the reinforcement, psi; and

= 1.0 for No. 3 through No. 5 reinforcing bars,

1.4 for No. 6 through No. 7 reinforcing bars, or

1.5 for No. 8 through No. 9 reinforcing bars.

The metric equivalent of Eq. 11.4.5.2 is

$$l_d = \left(\frac{1}{f}\right)\left(\frac{1.57 d_b^2 f_y g}{K\sqrt{f_m^{'}}}\right) \qquad (11.4.5.2\text{-}1)$$

where l_d , K, and d_b are in mm and f_y and f'_m are in MPa.

11.4.5.3 Standard Hooks:

11.4.5.3.1: The term standard hook as used in the *Provisions* shall mean one of the following:

11.4.5.3.1.1: A 180-degree turn plus extension of at least 4 bar diameters but not less than 2-1/2 in. (64 mm) at free end of bar.

11.4.5.3.1.2: A 90-degree turn plus extension of at least 12 bar diameters at free end of bar.

11.4.5.3.1.3: For *stirrup* and tie anchorage only, either a 135-degree or a 180-degree turn plus an extension of at least 6 bar diameters at the free end of the bar.

11.4.5.3.2: The equivalent embedment length for standard hooks in tension, l_{dh}, shall be as follows:

$$l_{dh} = 13 d_b \qquad (11.4.5.3.2)$$

where d_b = diameter of the reinforcement, in. The metric equivalent of Eq. 11.4.5.3.2 is the same except that d_b is in mm.

11.4.5.3.3: The effect of hooks for bars in compression shall be neglected in design computations.

11.4.5.4 Minimum Bend Diameter for Reinforcing Bars:

11.4.5.4.1: The diameter of bend measured on the inside of the bar, other than for *stirrups* and ties, shall not be less than values specified in Table 11.4.5.4.1.

TABLE 11.4.5.4.1 Minimum Diameters of Bend

Bar Size	Grade	Minimum Bend
No. 3 (10 mm) through No. 7 (22 mm)	40	5 bar diameters
No. 3 (10 mm) through No. 8 (25 mm)	50 or 60	6 bar diameters
No. 9 (29 mm)	50 or 60	8 bar diameters

11.4.5.5 Development of Shear Reinforcement:

11.4.5.5.1: Shear reinforcement shall extend the depth of the member less cover distances.

11.4.5.5.2: The ends of single leg or U-stirrups shall be anchored by one of the following means:

a. A standard hook plus an effective embedment of 0.5 times the development length, l_d. The effective embedment of a *stirrup* leg shall be taken as the distance between the mid-depth of the member and the start of the hook (point of tangency).

b. For No. 5 (16 mm) bar and D31 wire and smaller, bending around longitudinal reinforcement through at least 135 degrees plus an embedment of $l_d/3$. The $l_d/3$ embedment of a *stirrup* leg shall be taken as the distance between mid-depth of the member and the start of the hook (point of tangency).

c. Between the anchored ends, each bend in the continuous portion of a transverse U-stirrup shall enclose a longitudinal bar.

11.4.5.5.3: Except at wall intersections, the end of a reinforcing bar needed to satisfy shear strength requirements in accordance with Sec. 11.7.3.3 shall be bent around the edge vertical reinforcing bar with a 180-degree hook. At *wall* intersections, reinforcing bars used as shear reinforcement shall be bent around the edge vertical bar with a 90-degree standard hook and shall extend horizontally into the intersecting *wall*.

11.4.5.6 Splices of Reinforcement: Lap splices, welded splices, or mechanical connections shall be in accordance with the provisions of this section.

11.4.5.6.1 Lap Splices: Lap splices shall not be used in plastic hinge zones. The length of the plastic hinge zone shall be taken as at least 0.15 times the distance between the point of zero moment and the point of maximum moment.

11.4.5.6.1.1: The minimum length of lap, l_{ld}, for bars in tension or compression shall be equal to the development length, l_d, as determined by Eq. 11.4.5.2 but shall not be less than 12 in. (305 mm) for bars and 6 in (152 mm) for wire.

11.4.5.6.1.2: Bars spliced by non-contact lap splices shall not be spaced transversely farther apart than one-fifth the required length of lap or more than 8 in. (203 mm).

11.4.5.6.2 Welded Splices: A welded splice shall be capable of developing in tension 125 percent of the specified yield strength, f_y, of the bar. Welded splices shall only be permitted for ASTM A706 steel reinforcement. Welded splices shall not be permitted in plastic hinge zones of intermediate or special reinforced walls or special moment frames of masonry.

11.4.5.6.3 Mechanical Splices: Mechanical splices shall be classified as Type 1 or Type 2 according to Sec. 21.2.6.1 of ACI 318.

Type 1 mechanical splices shall not be used within a plastic hinge zone or within a beam-column joint of intermediate or special reinforced masonry shear walls or special moment frames. Type 2 mechanical splices shall be permitted in any location within a member.

11.5 STRENGTH AND DEFORMATION REQUIREMENTS:

11.5.1 General: Masonry *structures* and masonry members shall be designed to have strength at all sections at least equal to the *required strength* calculated for the factored loads in such combinations as are stipulated in these provisions.

11.5.2 Required Strength: The *required strength* shall be determined in accordance with Chapters 5 and 6.

11.5.3 Design Strength: *Design strength* provided by a member and its connections to other members and its cross sections in terms of flexure, axial load, and shear shall be taken as the *nominal strength* multiplied by a strength reduction factor, N, as specified in Table 11.5.3.

TABLE 11.5.3 Strength Reduction Factor N

Axial load, flexure, and combinations of axial load and flexure	Reinforced masonry Plain masonry	N = 0.85 N = 0.60
Shear	Reinforced masonry	N = 0.80
Shear	Plain masonry	N = 0.80
Reinforcement development length and splices		N = 0.80
Anchor bolt strength as governed by steel		N = 0.90
Anchor bolt strength as governed by masonry		N = 0.50
Bearing		N = 0.60

11.5.4 Deformation Requirements:

11.5.4.1: Masonry *structures* shall be designed so the design story drift, $)$, does not exceed the allowable story drift, $)_a$, obtained from Table 5.2.8.

11.5.4.1.1: Cantilever *shear walls* shall be proportioned such that the maximum displacement, $*_{max}$, at Level n does not exceed $0.01h_n$.

11.5.4.2: Deflection calculations for plain masonry members shall be based on uncracked section properties.

11.5.4.3: Deflection calculations for reinforced masonry members shall be based on an effective moment of inertia in accordance with the following:

$$I_{eff} = I_n \left(\frac{M_{cr}}{M_a} \right)^3 + I_{cr} \left[1 - \left(\frac{M_{cr}}{M_a} \right)^3 \right] \leq I_n \qquad (11.5.4.3)$$

where:

M_{cr} = Sf_r ,

M_{cr} = cracking moment strength of the masonry, in.-lb;

M_a = maximum moment in the member at the stage deflection is computed, in.-lb;

I_{cr} = moment of inertia of the cracked section, in.^{4};

I_n = moment of inertia of the net cross-sectional area of the member, in.^{4};

S = uncracked section modulus of the *wall*, in.^{3}; and

f_r = modulus of rupture of masonry, psi.

The metric equivalent of Eq. 11.5.4.3 is the same except that M_{cr} and M_a are in (N-mm), I_{cr} and I_n are in mm^4, S is in mm^3, and f_r is in MPa.

11.5.4.4: The calculated deflection shall be multiplied by C_d for determining drift.

11.6 FLEXURE AND AXIAL LOADS:

11.6.1 Scope: This section shall apply to the design of masonry members subject to flexure or axial loads or to combined flexure and axial loads.

11.6.2 Design Requirements of Reinforced Masonry Members:

11.6.2.1: Strength design of members for flexure and axial loads shall be in accordance with principles of engineering mechanics and in accordance with the following design assumptions:

a. Strain in reinforcement and masonry shall be assumed directly proportional to the distance from the neutral axis, except for deep flexural members with overall depth to clear span ratio greater than 2/5 for continuous span members and 4/5 for simple span members where a nonlinear distribution of strain shall be considered.

b. Maximum usable strain, ε_{mu}, at the extreme masonry compression fiber shall be assumed equal to 0.0025 in./in. for concrete masonry and 0.0035 in./in. for clay-unit masonry.

c. Stress in reinforcement below the *specified* yield strength, f_y, shall be taken as the modulus of elasticity, E_s, times the steel strain. For strains greater than those corresponding to the *specified* yield strength, f_y, the stress in the reinforcement shall be considered independent of strain and equal to the *specified* yield strength, f_y,

d. Tensile strength of masonry shall be neglected in calculating the flexural strength of a *reinforced masonry* cross section.

e. Flexural compression in masonry shall be assumed to be an equivalent rectangular stress block. Masonry stress of 0.80 times the *specified* compressive strength, f'_m shall be assumed to be uniformly distributed over an equivalent compression zone bounded by edges of the cross section and a straight line located parallel to the neutral axis at a distance $a = 0.80c$ from the fiber of maximum compressive strain. For out of plane bending, the width of the equivalent stress block shall not be taken greater than 6 times the nominal thickness of the masonry wall or the spacing between reinforcement, whichever is less. For in-plane bending of flanged walls, the same dimension shall apply.

11.6.2.2: For structures designed using an R value greater than 1.5, the ratio of reinforcement, D, shall not exceed the lesser ratio as calculated with either of the following two critical strain conditions:

a. For walls subjected to in-plane forces, for columns, and for beams, the critical strain condition corresponds to a strain in the extreme tension reinforcement equal to 5 times the strain associated with the reinforcement yield stress, f_y.

b. For walls subjected to out-of-plane forces, the critical strain condition corresponds to a strain in the extreme tension reinforcement equal to 1.3 times the strain associated with the reinforcement yield stress, f_y.

For both cases, the strain in the extreme compression fiber shall be assumed to be either 0.0035 for clay masonry or 0.0025 for concrete masonry.

The calculation of the maximum reinforcement ratio shall include unfactored gravity axial loads. The stress in the tension reinforcement shall be assumed to be $1.25 f_y$. Tension in the masonry shall be neglected. The strength of the compressive zone shall be calculated as 80 percent of f'_m times 80 percent of the area of the compressive zone. Stress in reinforcement in the compression zone shall be based on a linear strain distribution.

For structures designed using an R value less than or equal to 1.5, the ratio of reinforcement, D, shall not exceed the ratio as calculated with the following critical strain condition:

The critical strain condition corresponds to a strain in the extreme tension reinforcement equal to 2 times the strain associated with the reinforcement yield stress, f_y. The strain in the extreme compression fiber shall be assumed to be either 0.0035 for clay masonry or 0.0025 for concrete masonry.

The calculation of the maximum reinforcement ratio shall include unfactored gravity axial loads. The stress in the tension reinforcement shall be calculated by multiplying the strain by the modulus of elasticity of the reinforcement, but need not be taken greater than $1.25 f_y$. Tension in the masonry shall be neglected. The strength of the compressive zone shall be calculated using an triangular stress block whose maximum value is the strain in the extreme compression fiber of the masonry, times the modulus of elasticity of the masonry. Stress in reinforcement in the compression zone shall be based on a linear strain distribution.

11.6.2.3: Members subject to compressive axial load shall be designed for the maximum moment that can accompany the axial load. The required moment, M_u, shall include the moment induced by relative lateral displacements.

11.6.3 Design of Plain (Unreinforced) Masonry Members:

11.6.3.1: Strength design of members for flexure and axial load shall be in accordance with principles of engineering mechanics .

11.6.3.2: Strain in masonry shall be assumed directly proportional to the distance from the neutral axis.

11.6.3.3: Flexural tension in masonry shall be assumed directly proportional to strain.

11.6.3.4: Flexural compressive stress in combination with axial compressive stress in masonry shall be assumed directly proportional to strain. Maximum compressive stress shall not exceed $0.85 f_m^{/}$.

11.6.3.5: Design axial load strength shall be in accordance with Eq. 11.6.3.5-1 or Eq. 11.6.3.5-2:

$$P_n = A_n f_m^{/} \left[1 - \left(\frac{h}{140r}\right)^2\right] \text{ for } h/r < \qquad (11.6.3.5\text{-}1)$$

$$P_n = A_n f_m^{/} \left(\frac{70r}{h}\right)^2 \text{ for } h/r \geq 99 \qquad (11.6.3.5\text{-}2)$$

where:

N	=	strength reduction factor per Table 11.5.3;
A_n	=	*net cross-sectional area* of the masonry, in.^{2};
$f_m^{/}$	=	*specified* compressive strength of the masonry, psi;
h	=	*effective height* of the *wall* between points of support, in. and
r	=	radius of gyration, inches.

The metric equivalents for Eq. 11.6.3.5-1 and Eq. 11.6.3.5-2 are the same except that A_n is in mm^2, $f_m^{/}$ is in MPa, and h and r are in mm..

11.7 SHEAR:

11.7.1 Scope: Provisions of this section shall apply for design of members subject to shear.

11.7.2 Shear Strength:

11.7.2.1: Design of cross sections subjected to shear shall be based on:

$$V_u \# \quad V_n \tag{11.7.2.1}$$

where:

V_u	=	required shear strength due to factored loads, lb;
N	=	strength reduction factor per Table 11.5.3; and
V_n	=	nominal shear strength, lb.

The metric equivalent of Eq. 11.7.2.1 is the same except that V_u and V_n are in N.

11.7.2.2: The design shear strength, NV_n , shall exceed the shear corresponding to the development of 1.25 times the nominal flexural strength of the member, except that the nominal shear strength need not exceed 2.5 times V_u.

11.7.3 Design of Reinforced Masonry Members:

11.7.3.1: Nominal shear strength, V_n, shall be computed as follows:

$$V_n = V_m + V_s \tag{11.7.3.1-1}$$

where:

V_n	=	nominal shear strength, lb;
V_m	=	nominal shear strength provided by masonry, lb; and
V_s	=	shear strength provided by reinforcement, lb.

The metric equivalent for Eq. 11.7.3.1-1 is the same except that V_n, V_m, and V_s are in N.

$$V_n(\text{max}) = 6\sqrt{f'_m}\, A_n \tag{11.7.3.1-2}$$

For $M/Vd_v < 0.25$:

For $M/Vd_v < 1.00$:

$$V_n(\text{max}) = 4\sqrt{f'_m}\, A_n \tag{11.7.3.1-3}$$

where:

$V_n(max)$	=	maximum nominal shear strength, lb;
A_n	=	net cross-sectional area of the masonry, in.^{2};
f'_m	=	specified compressive strength of the masonry, psi;
M	=	moment on the masonry section due to unfactored design loads, in.-lb;
V	=	shear on the masonry section due to unfactored loads, lb; and
d_v	=	length of member in direction of shear force, inches.

Values of M/Vd_v between 0.25 and 1.0 may be interpolated.

The metric equivalent of Eq. 11.7.3.1-2 is $V_{m(max)} = 0.5\sqrt{f'_m}A_n$ and the metric equivalent of Eq. 11.7.3.1-3 is $V_m(max) = 0.33\sqrt{f'_m}A_n$ where $V_n\,(max)$ is in N, A_n is in mm^2, f'_m is in MPa, M is in N-mm, and d is in mm.

11.7.3.2: Shear strength, V_m, provided by masonry shall be as follows:

$$V_m = \left[4.0 - 1.75\left(\frac{M}{Vd}\right)\right]A_n\sqrt{f'_m} + 0.25P \qquad (11.7.3.2)$$

where M/Vd_v need not be taken greater than 1.0 and

V_m	=	shear strength provided by masonry, lb;
M	=	moment on the masonry section due to unfactored design loads, in.-lb;
V	=	shear on the masonry section due to unfactored loads, psi;
d_v	=	length of member in direction of shear force , in.;
A_n	=	net cross-sectional area of the masonry, in.^{2};
f'_m	=	specified compressive strength of the masonry, psi; and
P	=	axial load on the masonry section due to unfactored design loads, lb.

The metric equivalent of Eq. 11.7.3.2 is $V_m = 0.083\left[4.0 - 1.75\left(\frac{M}{Vd}\right)\right]A_n\sqrt{f'_m} + 0.25P$ where V_m and P are in N, M is in N-mm, f'_m is in MPa, d is in mm, and A_n is in mm^2.

11.7.3.3: Nominal shear strength, V_s, provided by reinforcement shall be as follows:

$$V_s = 0.5\left(\frac{A_v}{s}\right) f_y d_v \qquad (11.7.3.3)$$

where:

A_v	=	area of shear reinforcement, in.^{2} (mm^2);
d_v	=	length of member in direction of shear force, in. (mm);
s	=	spacing of shear reinforcement, in. (mm); and
f_y	=	specified yield strength of the reinforcement or the anchor bolt as applicable, psi (MPa).

The metric equivalent of Eq. 11.7.3.3 is the same.

11.7.4 Design of Plain (Unreinforced) Masonry Members:

11.7.4.1: Nominal shear strength, V_n, shall be the least of the following:

a. $1.50\sqrt{f'_m}A_n$, lb (the metric equivalent is $0.375\sqrt{f'_m}A_n$, where f'_m is in MPa and A_n is in mm^2);

b. $120A_n$, lb (the metric equivalent is $0.83A_n$, N, where A_n is in mm^2);

c. $37\ A_n + 0.3\ N_v$ for *running bond* masonry not grouted solid, lb (the metric equivalent is $0.26A_n + 0.3N_v$ where A_n is in mm^2 and N_v is in N);

$37\ A_n + 0.3\ N_v$ for *stack bond* masonry with open end units grouted solid, lb (the metric equivalent is $0.26A_n + 0.3N_v$ when A_n is in mm^2 and N_v is in N);

$60\ A_n + 0.3\ N_v$ for *running bond* masonry grouted solid, lb (the metric equivalent is $0.414A_n + 0.3N_v$ when A_n is in mm^2 and N_v is in N); and

$15\ A_n$ for *stack bond* masonry with other than open end units grouted solid, lb (the metric equivalent is $0.103A_n$ when A_n is in mm^2

where:

f'_m	=	*specified* compressive strength of the masonry, psi;
A_n	=	*net cross-sectional area* of the masonry, in.^{2}; and
N_v	=	force acting normal to shear surface, lb.

11.8 SPECIAL REQUIREMENTS FOR BEAMS:

11.8.1: The spacing between lateral supports shall be determined by the requirements for out of-plane loading but shall not exceed 32 times the least width of beam.

11.8.2: The effects of lateral eccentricity of load shall be taken into account in determining spacing of lateral supports.

11.8.3: The minimum positive reinforcement ratio r in a beam shall not be less than $120/f_y$ (the metric equivalent is $0.83/f_y$ where f_y is in MPa) except that this minimum positive steel reinforcement ratio need not be satisfied if the area of reinforcement provided is one third greater than that required by analysis for *gravity loads* and the *Seismic Design Category* is A, B, or C.

Where a concrete floor provides a flange and where the beam web is in tension, the ratio, D, shall be computed using the web width.

11.8.4 Deep Flexural Members:

11.8.4.1: Flexural members with overall depth to clear span ratios greater than 2/5 for continuous spans or 4/5 for simple spans shall be designed as deep flexural members taking into account nonlinear distribution of strain and lateral buckling.

11.8.4.2: Minimum flexural tension reinforcement shall conform to Sec. 11.8.3.

11.8.4.3: Uniformly distributed horizontal and vertical reinforcement shall be provided throughout the length and depth of deep flexural members such that the reinforcement ratios in both directions are at least 0.001. Distributed flexural reinforcement is to be included in the determination of the actual reinforcement ratios.

11.9 SPECIAL REQUIREMENTS FOR COLUMNS:

11.9.1: Area of longitudinal reinforcement for *columns* shall be not less than 0.005 or more than 0.04 times cross-sectional area of the *column*.

11.9.2: There shall be a minimum of four longitudinal bars in *columns*.

11.9.3: Lateral ties shall be provided to resist shear and shall comply with the following:

a. Lateral ties shall be at least 1/4 in. (6 mm) in diameter.

b. Vertical spacing of lateral ties shall not exceed 16 longitudinal bar diameters, 48 lateral tie diameters, nor the least cross sectional dimension of the column.

c. Lateral ties shall be arranged such that every corner and alternate longitudinal bar shall have lateral support provided by the corner of a lateral tie with an included angle of not more than 135 degrees and no bar shall be farther than 6 in. (152 mm) clear on each side along the lateral tie from such a laterally supported bar. Lateral ties shall be placed in either a mortar joint or grout. Where longitudinal bars are located around the perimeter of a circle, a complete circular lateral tie is permitted. Minimum lap length for circular ties shall be 84 tie diameters.

d. Lateral ties shall be located vertically not more than one-half lateral tie spacing above the top of footing or slab in any story and shall be spaced as provided herein to not more than one-half a lateral tie spacing below the lowest horizontal reinforcement in beam, girder, slab or drop panel above.

e. Where beams or brackets frame into a column from four directions, lateral ties may be terminated not more than 3 in. (76 mm) below lowest reinforcement in the shallowest of such beams or brackets.

11.10 SPECIAL REQUIREMENTS FOR SHEAR WALLS:

11.10.1 Ordinary Plain Masonry Shear Walls: The design of *ordinary plain masonry shear walls* shall be in accordance with Sec. 11.3.2 or Sec. 11.3.3. No reinforcement is required to resist seismic forces.

11.10.2 Detailed Plain Masonry Shear Walls: The design of *detailed plain masonry shear walls* shall be in accordance with Sec. 11.3.3. *Detailed plain masonry shear walls* shall have minimum amounts of reinforcement as prescribed in Sec. 11.3.7.3 and 11.3.7.4.

11.10.3 Ordinary Reinforced Masonry Shear Walls: The design of *ordinary reinforced masonry shear walls* shall be in accordance with Sec. 11.3.4. No prescriptive seismic reinforcement is required for *ordinary reinforced masonry shear walls*

11.10.4 Intermediate Reinforced Masonry Shear Walls: The design of *intermediate reinforced masonry shear walls* shall be in accordance with Sec. 11.3.4. *Intermediate reinforced masonry shear walls* shall have minimum amounts of reinforcement as prescribed in Sec. 11.3.7.3 and 11.3.7.4.

11.10.5 Special Reinforced Masonry Shear Walls: *Special reinforced masonry shear walls* shall meet the requirements for *intermediate reinforced masonry shear walls* (Sec. 11.10.4) in addition to the requirements of this section.

The design of *special reinforced masonry shear walls* shall be in accordance with Sec. 11.3.4. *Special reinforced masonry shear walls* shall comply with material requirements of Sec. 11.3.8, minimum reinforcement requirements of Sec. 11.3.8.3 and 11.3.8.4, and minimum thickness requirements of Sec. 11.3.8.5. In addition, *special reinforced masonry shear walls* shall be reinforced and constructed as required in this section.

11.10.5.1 Vertical Reinforcement: The maximum spacing of vertical reinforcement in an *special reinforced masonry shear wall* shall be the smaller of::

a. One-third the length of the wall,

b. One-third the height of the wall, or

c. 48 in. (1219 mm).

11.10.5.2 Horizontal Reinforcement: Reinforcement required to resist in-plane shear in a *special reinforced masonry shear wall* shall be placed horizontally, shall be uniformly distributed, and shall be embedded in grout. The maximum spacing of horizontal reinforcement shall be the smaller of:

a. One-third the length of the wall,

b. One-third the height of the wall,

c. 48 in. (1219 mm), or

d. 24 in. (610 mm) for stack bond masonry.

11.10.5.3 Shear Keys: The surface of concrete upon which a *special reinforced masonry shear wall* is constructed shall have a minimum surface roughness of 1/8 in. (3.0 mm). Keys with the following minimum requirements shall be placed at the base of *special reinforced masonry shear walls* when the calculated strain in vertical reinforcement exceeds the yield strain under load combinations that include seismic forces based on a *R* factor equal to 1.5:

a. The width of the keys shall be at least equal to the width of the grout space

b. The depth of the keys shall be at least 1.5 in. (40 mm),

c. The length of the key shall be at least 6 in. (152 mm),

d. The spacing between keys shall be at least equal to the length of the key,

e. The cumulative length of all keys shall be at least 20 percent of the length of the shear wall,

f. A minimum of one key shall be placed within 16 in. (406 mm) of each end of a shear wall, and

g. Each key and the grout space above each key in the first course of masonry shall be grouted solid.

11.10.6: Flanged Shear Walls:

11.10.6.1: *Wall* intersections shall be considered effective in transferring shear when either conditions (a) or (b) and condition (c) as noted below are met:

a. The face shells of hollow masonry units are removed and the intersection is fully grouted.

b. Solid units are laid in running bond and 50 percent of the masonry units at the intersection are interlocked.

c. Reinforcement from one intersecting *wall* continues past the intersection a distance not less than 40 bar diameters or 24 in. (600 mm).

11.10.6.2: The width of flange considered effective in compression on each side of the web shall be taken equal to 6 times the thickness of the web or shall be equal to the actual flange on either side of the web *wall*, whichever is less.

11.10.6.3: The width of flange considered effective in tension on each side of the web shall be taken equal to 3/4 of the *wall* height or shall be equal to the actual flange on either side of the web *wall*, whichever is less.

11.10.7 Coupled Shear Walls:

11.10.7.1 Design of Coupled Shear Walls: Structural members that provide coupling between *shear walls* shall be designed to reach their moment or shear *nominal strength* before either *shear wall* reaches its moment or shear *nominal strength.* Analysis of coupled *shear walls* shall conform to accepted principles of mechanics.

11.10.7.2 Shear Strength of Coupling Beams: The design shear strength, ϕV_n, of the coupling beams shall exceed the shear calculated as follows:

$$\phi V_n \geq \frac{1.25(M_1 + M_2)}{L_c} + 1.4V_g \qquad (11.10.7.2)$$

where:

ϕV_n	=	shear strength, lb (N);
M_1 and M_2	=	nominal moment strength at the ends of the beam, lb-in. (N-mm);
L_c	=	length of the beam between the *shear walls*, in. (mm); and
V_g	=	unfactored shear force due to gravity loads, lb (N).

The metric equivalent of Eq. 11.10.7.2 is the same except that V_n and V_g are in N, M_1 and M_2 are in N-mm, and L is in mm.

The calculation of the nominal flexural moment shall include the reinforcement in reinforced concrete roof and floor system. The width of the reinforced concrete used for calculations of reinforcement shall be six times the floor or roof slab thickness.

11.11 SPECIAL MOMENT FRAMES OF MASONRY:

11.11.1 Calculation of Required Strength: The calculation of required strength of the members shall be in accordance with principles of engineering mechanics and shall consider the effects of the relative stiffness degradation of the beams and columns.

11.11.2 Flexural Yielding: Flexural yielding shall be limited to the beams at the face of the *columns* and to the bottom of the columns at the base of the *structure*.

11.11.3 Reinforcement:

11.11.3.1: The nominal moment strength at any section along a member shall not be less than one-half of the higher moment strength provided at the two ends of the member.

11.11.3.2: Lap splices are permitted only within the center half of the member length.

11.11.3.3: Welded splices and mechanical connections may be used for splicing the reinforcement at any section provided not more than alternate longitudinal bars are spliced at a section and the distance between splices on alternate bars is at least 24 in. (610 mm) along the longitudinal axis.

11.11.3.4: Reinforcement shall have a specified yield strength of 60,000 psi (414 MPa). The actual yield strength shall not exceed 1.5 times the specified yield strength.

11.11.4 Wall Frame Beams:

11.11.4.1: Factored axial compression force on the beam shall not exceed 0.10 times the net cross-sectional area of the beam, A_n, times the specified compressive strength, $f_m^{/}$.

11.11.4.2: Beams interconnecting vertical elements of the lateral-load-resisting system shall be limited to a reinforcement ratio of $0.15f!_m/f_y$ or that determined in accordance with Sec. 11.6.2.2. All reinforcement in the beam and adjacent to the beam in a reinforced concrete roof or floor system shall be used to calculate the reinforcement ratio.

11.11.4.3: Clear span for the beam shall not be less than 4 times its depth.

11.11.4.4: Nominal depth of the beam shall not be less than 4 units or 32 in. (813 mm), whichever is greater. The nominal depth to nominal width ratio shall not exceed 4.

11.11.4.5: Nominal width of the beams shall equal or exceed all of the following criteria:

a. 8 in. (203 mm),

b. Width required by Sec. 11.8.1, and

c. 1/26 of the clear span between *column* faces.

11.11.4.6: Longitudinal Reinforcement:

11.11.4.6.1: Longitudinal reinforcement shall not be spaced more than 8 in. (203 mm) on center.

11.11.4.6.2: Longitudinal reinforcement shall be uniformly distributed along the depth of the beam.

11.11.4.6.3: In lieu of the limitations of Sec. 11.8.3, the minimum reinforcement ratio shall be $130/f_y$ (the metric equivalent is $0.90/f_y$ where f_y is in MPa).

11.11.4.6.4: At any section of a beam, each masonry unit through the beam depth shall contain longitudinal reinforcement.

11.11.4.7 Transverse Reinforcement:

11.11.4.7.1: Transverse reinforcement shall be hooked around top and bottom longitudinal bars and shall be terminated with a standard 180-degree hook.

11.11.4.7.2: Within an end region extending one beam depth from *wall* frame column faces and at any region at which beam plastic hinges may form during seismic or wind loading, maximum spacing of transverse reinforcement shall not exceed one-fourth the nominal depth of the beam.

11.11.4.7.3: The maximum spacing of transverse reinforcement shall not exceed one-half the nominal depth of the beam or that required for shear strength.

11.11.4.7.4: Minimum transverse reinforcement ratio shall be 0.0015.

11.11.4.7.5: The first transverse bar shall not be more than 4 in. (102 mm) from the face of the pier.

11.11.5 Wall Frame Columns:

11.11.5.1: Factored axial compression force on the *wall* frame column shall not exceed 0.15 times the net cross-sectional area of the column, A_n, times the specified compressive strength, f'_m. The compressive stress shall also be limited by the maximum reinforcement ratio.

11.11.5.2: *Nominal dimension* of the column parallel to the plane of the *wall* frame shall not be less than two full units or 32 in. (810 mm), whichever is greater.

11.11.5.3: *Nominal dimension* of the column perpendicular to the plane of the *wall* frame shall not be less than 8 in. (203 mm) or 1/14 of the clear height between beam faces.

11.11.5.4: The clear height-to-depth ratio of column members shall not exceed 5.

11.11.5.5 Longitudinal Reinforcement:

11.11.5.5.1: A minimum of 4 longitudinal bars shall be provided at all sections of every *wall* frame column member.

11.11.5.5.2: The flexural reinforcement shall be uniformly distributed across the member depth.

11.11.5.5.3: The nominal moment strength at any section along a member shall be not less than 1.6 times the cracking moment strength and the minimum reinforcement ratio shall be $130/f_y$ (the metric equivalent is $0.90/f_y$ where f_y is in MPa).

11.11.5.5.4: Vertical reinforcement in wall-frame columns shall be limited to a maximum reinforcement ratio equal to the lesser of $0.15f'_m / f_y$ or that determined in accordance with Sec. 11.6.2.2.

11.11.5.6 Transverse Reinforcement:

11.11.5.6.1: Transverse reinforcement shall be hooked around the extreme longitudinal bars and shall be terminated with a standard 180-degree hook.

11.11.5.6.2: The spacing of transverse reinforcement shall not exceed one-fourth the nominal dimension of the column parallel to the plane of the *wall* frame.

11.11.5.6.3: Minimum transverse reinforcement ratio shall be 0.0015.

11.11.6 Wall Frame Beam-Column Intersection:

11.11.6.1: Beam-column intersection dimensions in masonry wall frames shall be proportioned such that the wall frame column depth in the plane of the frame satisfies Eq. 11.11.6.1-1:

$$h_p > \frac{4{,}800\, d_{bb}}{\sqrt{f_g^{/}}} \qquad (11.12.6.1\text{-}1)$$

where:

h_p = pier depth in the plane of the wall frame, in.;

d_{bb} = diameter of the largest beam longitudinal reinforcing bar passing through, or anchored in, the wall frame beam-column intersection, in.; and

$f_g^{/}$ = specified compressive strength of grout, psi (shall not exceed 5,000 psi (34.5 MPa) for use in Eq. 11.11.7.1-1).

The metric equivalent of Eq. 11.11.6.1-1 is $h_p > \frac{400 d_{bb}}{\sqrt{f_g^{/}}}$ where h_p and d_{bb} are in mm and $f_g^{/}$ is in MPa.

Beam depth in the plane of the frame shall satisfy Eq. 11.11.6.1-2:

$$h_b > \frac{1800 d_{bp}}{\sqrt{f_g^{/}}} \qquad (11.11.6.1\text{-}2)$$

where:

h_b = beam depth in the plane of the wall frame, in.;

d_{bp} = diameter of the largest *column* (pier) longitudinal reinforcing bar passing through, or anchored in, the wall frame beam-column intersection, in.; and

$f_g^{/}$ = specified compressive strength of grout, psi (shall not exceed 5,000 psi (34.2MPa) for use in Eq. 11.11.6.1-1).

The metric equivalent of Eq. 11.11.6.1-2 is $h_b > \frac{150 d_{bp}}{\sqrt{f'_g}}$ where h_b and d_{bp} are in mm and f'_g is in MPa.

Nominal shear strength of beam-column intersections shall exceed the shear occurring when wall frame beams develop their nominal flexural strength.

11.11.6.2: Beam longitudinal reinforcement terminating in a wall frame column shall be extended to the far face of the *column* and shall be anchored by a standard hook bent back into the wall frame column.

Special horizontal shear reinforcement crossing a potential diagonal beam *column* shear crack shall be provided such that:

$$A_s \$ \frac{0.5 V_n}{f_y} \qquad (11.11.6.2)$$

where:

A_s = cross-sectional area of reinforcement in.^{2};

V_n = nominal shear strength, lb; and

f_y = *specified* yield strength of the reinforcement or the *anchor* bolt as applicable, psi.

The metric equivalent of Eq. 11.11.6.2 is the same except that A_s is in mm^2, V_n is in N, and f_y is in MPa.

Special horizontal shear reinforcement shall be anchored by a standard hook around the extreme wall frame column reinforcing bars.

Vertical shear forces may be considered to be carried by a combination of masonry shear-resisting mechanisms and truss mechanisms involving intermediate column reinforcing bars.

The nominal horizontal shear stress at the beam-*column* intersection shall not exceed the lesser of 350 psi (2.5 MPa) or $7\sqrt{f'_m}$ (the metric equivalent is $0.58\sqrt{f'_m}$ MPa).

11.12 GLASS-UNIT MASONRY AND MASONRY VENEER:

11.12.1 Design Lateral Forces and Displacements: Glass-unit masonry and masonry veneer shall be designed and detailed to resist the design lateral forces as described in Sec. 6.1 and 6.2.

11.12.2 Glass-Unit Masonry Design:

11.12.2.1: The requirements of Chapter 7 of ACI 530 shall apply to the design of *glass unit masonry*. The out-of-plane seismic strength shall be considered as the same as the strength to resist wind pressure as specified in Sec. 7.3 of ACI 530 .

11.12.3 Masonry Veneer Design:

11.12.3.1: The requirements of Chapter 6 of ACI 530 shall apply to the design of *masonry veneer*.

11.12.3.2: For *structures* in *Seismic Design Category E*, corrugated sheet metal anchors shall not be used.

Chapter 12

WOOD STRUCTURE DESIGN REQUIREMENTS

12.1 GENERAL:

12.1.1 Scope: The design and construction of wood *structures* to resist seismic forces and the material used therein shall comply with the requirements of this chapter.

12.1.2 Reference Documents: The quality, testing, design, and construction of members and their fastenings in wood systems that resist seismic forces shall conform to the requirements of the reference documents listed in this section except as modified by the provisions of this chapter.

12.1.2.1 Engineered Wood Construction:

ASCE 16	American Society of Civil Engineers (ASCE), *Load and Resistance Factor Standard for Engineered Wood Construction*, including supplements, ASCE 16, 1995.
APA Y510T	American Plywood Association (APA), *Plywood Design Specifications* 1998
APA N375B	American Plywood Association (APA), *Design Capacities of APA Performance-Rated Structural-Use Panels*, N375B, 1995
APA E315H	American Plywood Association (APA), *Diaphragms*, Research Report 138, 1991

12.1.2.2 Conventional Light-Frame Construction:

CABO Code	Council of American Building Officials (CABO), *One- and Two-Family Dwelling Code*, 1995
NFoPA T903	National Forest and Paper Association (NFoPA), *Span Tables for Joists and Rafters*, T903, 1992

12.1.2.3 Materials Standards:

PS 20	U.S. Department of Commerce, Natioanal Institute of Standards and Technology, *American Softwood Lumber Standard*, PS 20, 1999
ANSI/AITC A190.1	American National Standards Institute/American Institute of Timber Construction (ANSI/AITC), *American National Standard for Wood Products Structural Glues Laminated Timber*, A190.1, 1992
ASTM D5055-95A	American Society of Testing and Materials (ASTM), *Standard Specification for Establishing and Monitoring Structural Capacities of Prefabricated Wood I-Joists*, D5055-95A, 1995

PS 1	U.S. Department of Commerce, National Institute of Standards and Technology, *Construction and Industrial Plywood American*, PS 1, 1995
PS 2	U.S. Department of Commerce, Natioanal Institute of Standards and Technology, *Performance Standard for Wood-Based Structural-use Panels,* PS 2, 1992
ANSI 05.1	American National Standards Institute (ANSI), *Wood Poles*, ANSI 05.1, 1992
ANSI A208.1	American National Standards Institute (ANSI), *Wood Particleboard*, ANSI A208.1, 1992
AWPA C1, 2, 3, 9, 28	American Wood Preservers Association (AWPA), *Preservative Treatment by Pressure Process*, AWPA C1, 1991; C2 and C3, 1991; C9, 1990; and C28, 1991

12.1.3 Notations:

D = Reference resistance.

D' = Adjusted resistance.

h = The height of a shear wall measured as:

1. The maximum clear height from top of foundation to bottom of diaphragm framing above or
2. The maximum clear height from top of diaphragm to bottom of diaphragm framing above.

l = The dimension of a diaphragm perpendicular to the direction of application of force. For open-front *structures*, l is the length from the edge of the diaphragm at the open front to the vertical resisting elements parallel to the direction of the applied force. For a cantilevered diaphragm, l is the length of the cantilever.

w = The width of a diaphragm or shear wall in the direction of application of force measured as the sheathed dimension of the shear wall or diaphragm.

λ = Time effect factor.

ϕ = Resistance factor.

$\lambda\phi D$ = Factored resistance.

12.2 DESIGN METHODS: Design of wood *structures* to resist seismic forces shall be by one of the methods described in Sec. 12.2.1 and 12.2.2.

12.2.1 Engineered Wood Design: Engineered design of wood *structures* shall use load and resistance factor design (LRFD) and shall be in accordance with this chapter and the reference documents specified in Sec. 12.1.2.1.

12.2.2 Conventional Light-Frame Construction: Where permitted by Sec.12.7 and 12.8, wood *structures* shall be permitted to be constructed in accordance with the provisions of Sec. 12.5.

12.2.2.1 When a structure of otherwise conventional construction contains structural elements not conforming to Sec.12.5, those elements shall be designed in accordance with Sec. 12.2.1 and force resistance and stiffness shall be maintained.

12.3 GENERAL DESIGN REQUIREMENTS FOR ENGINEERED WOOD CONSTRUCTION:

12.3.1 General: The proportioning, design, and detailing of engineered wood systems, members, and connections shall be in accordance with the reference documents except as modified by this section.

12.3.2 Shear Resistance Based on Principles of Mechanics: Shear resistance of *diaphragms* and *shear walls* shall be permitted to be calculated by principles of mechanics using values of fastener strength and sheathing shear resistance provided consideration is given to the combined fastener and sheathing performance under cyclic loading.

12.3.3 Deformation Compatibility Requirements: Deformation compatibility of connections within and between structural elements shall be considered in design such that the deformation of each element and connection comprising the *seismic-force-resisting system* is compatible with the deformations of the other seismic-force-resisting elements and connections and with the overall system. See Sec. 5.2.8 for story drift limitations.

12.3.4 Framing Requirements: All wood columns and posts shall be framed to provide full end bearing. Alternatively, column and post end connections shall be designed to resist the full compressive loads, neglecting all end bearing capacity. Column and post end connections shall be fastened to resist lateral and net induced uplift forces.

Shear wall and diaphragm boundary elements shall be provided to transmit the design tension and compression forces. *Diaphragm* and *shear wall* sheathing shall not be used to splice *boundary elements*. *Diaphragm chords* and *drag struts* shall be placed in, or tangent to, the plane of the *diaphragm* framing unless it can be demonstrated that the moments, shears, and deflections and deformations, considering eccentricities resulting from other configurations, can be tolerated without exceeding the adjusted resistance and drift limits.

12.3.5 Sheathing Requirements: Wood structural panel sheathing shall have nominal sheet sizes of 4 ft by 8 ft (1200 mm by 2400 mm) or larger except where reduced widths are permitted per Sec. 12.4.1.3 and 12.4.2.6. Sheathing fasteners shall be placed at least 3/8 in. (10 mm) from ends and edges of boards and sheets. It is advised that the edge distance be increased where possible to reduce the potential for splitting of the framing and nail pull through in the sheathing. Sheathing nails or other approved sheathing connectors shall be driven flush with the surface of the sheathing.

Where wood structural panel sheathing is used as the exposed finish on the exterior of outside walls, it shall have an exterior exposure durability classification. Where wood structural panel sheathing is used on the exterior of outside walls but not as the exposed finish, it shall be of a

type manufactured with exterior glue. Where wood structural panel sheathing is used elsewhere, it shall be of a type manufactured with intermediate or exterior glue.

Panel materials other than wood structural panel sheathing have no recognized capacity for seismic-force resistance and are not permitted as part of the *seismic-force-resisting system* except in conventional light-frame construction, Sec.12.5.

12.3.6 Wood Members Resisting Horizontal Seismic Forces Contributed by Masonry and Concrete: Wood *shear walls*, *diaphragms*, horizontal trusses, and other members shall not be used to resist horizontal seismic forces contributed by masonry or concrete construction in *structures* over one story in height.

Exceptions:

1. Wood floor and roof members shall be permitted to be used in horizontal trusses and *diaphragms* to resist horizontal seismic forces (including those due to masonry veneer, fireplaces, and chimneys) provided such forces do not result in *torsional force distribution* through the truss or *diaphragm*.
2. Vertical wood structural panel sheathed *shear walls* shall be permitted to be used to provide resistance to seismic forces in two-story *structures* of masonry or concrete construction provided the following requirements are met:
   a. Story-to-story wall heights shall not exceed 12 ft (3660 mm).
   b. *Diaphragms* shall not be considered to transmit lateral forces by *torsional force distribution* or cantilever past the outermost supporting *shear wall*.
   c. Combined deflections of *diaphragms* and *shear walls* shall not permit per story drift of supported masonry or concrete walls to exceed the limits of Table 5.2.8.
   d. Wood structural panel sheathing in *diaphragms* shall have all unsupported edges blocked. Wood structural panel sheathing for both stories of *shear walls* shall have all unsupported edges blocked and, for the lower story, shall have a minimum thickness of 15/32 inch (12 mm).
   e. There shall be no out-of-plane horizontal offsets between the first and second stories of wood structural panel *shear walls*.

12.4 DIAPHRAGMS AND SHEAR WALLS:

12.4.1 Diaphragms:

12.4.1.1 Horizontal Distribution of Shear: *Diaphragms* shall be defined as flexible for the purposes of distribution of story shear and torsional moment when the maximum lateral deformation of the *diaphragm* is more than two times the average story drift of the associated story determined by comparing the computed maximum in-plane deflection of the *diaphragm* itself under lateral load with the story drift of adjoining vertical-resisting elements under equivalent tributary lateral load. Other *diaphragms* shall be defined as rigid. Design of *structures* with rigid *diaphragms* shall include the *structure* configuration requirements of Sec. 5.2.3.1 and the horizontal shear distribution requirements of Sec. 5.4.4.

Open-front *structures* with rigid wood *diaphragms* resulting in *torsional force distribution* shall be permitted provided the *length*, *l*, of the *diaphragm* normal to the open side does not exceed 25 ft (7620 mm), the *diaphragm* sheathing conforms to Sec.12.4.1.3 through 12.4.1.5, and the *l/w* ratio (as shown in Figure 12.4.1.1-1) is less than 1/1 for one-story *structures* or 1/1.5 for *structures* over one story in height.

> **Exception:** Where calculations show that *diaphragm* deflections can be tolerated, the *length, l*, normal to the open end shall be permitted to be increased to a *l/w* ratio not greater than 1.5/1 when sheathed in conformance with Sec. 12.4.1.3 or 12.4.3.5 or to 1/1 when sheathed in conformance with Sec. 12.4.1.4.

Rigid wood *diaphragms* shall be permitted to cantilever past the outermost supporting *shear wall* (or other vertical resisting element) a *length*, *l*, of not more than 25 ft (7620 mm) or two thirds of the *diaphragm width*, *w*, whichever is the smaller. Figure 12.4.1.1-2 illustrates the dimensions of *l* and *w* for a cantilevered *diaphragm*.

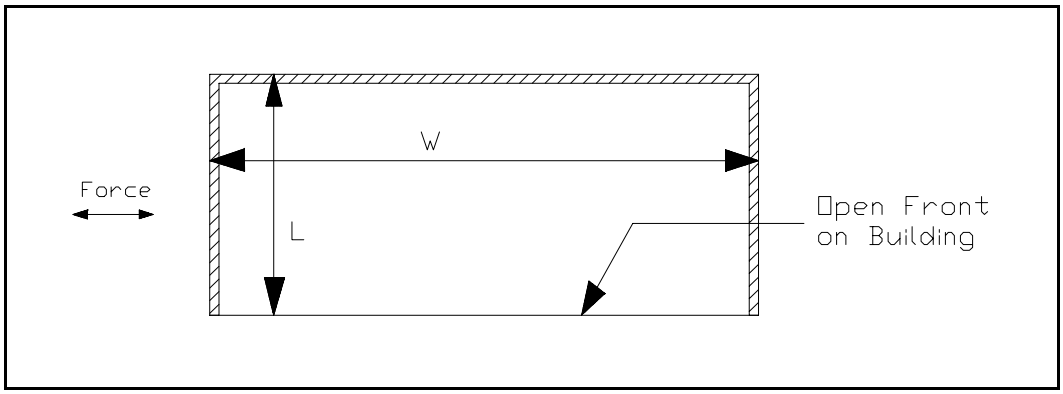

FIGURE 12.4.1.1-1 Diaphragm length and width for plan view of open front building.

Structures with rigid wood *diaphragms* having a torsional irregularity in accordance with Table 5.2.3.2, Item 1, shall meet the following requirements: The *l/w* ratio shall not exceed 1/1 for one-story *structures* or 1/1.5 for *structures* greater than one story in height where *l* is the dimension parallel to the load direction for which the irregularity exists.

> **Exception:** Where calculations demonstrate that the *diaphragm* deflections can be tolerated, the width is permitted to be increased and the *l/w* ratio may be increased to 1.5/1 when sheathed in conformance with Sec. 12.4.1.3 or to 1/1 when sheathed in conformance with Sec 12.4.1.4 or 12.4.1.5.

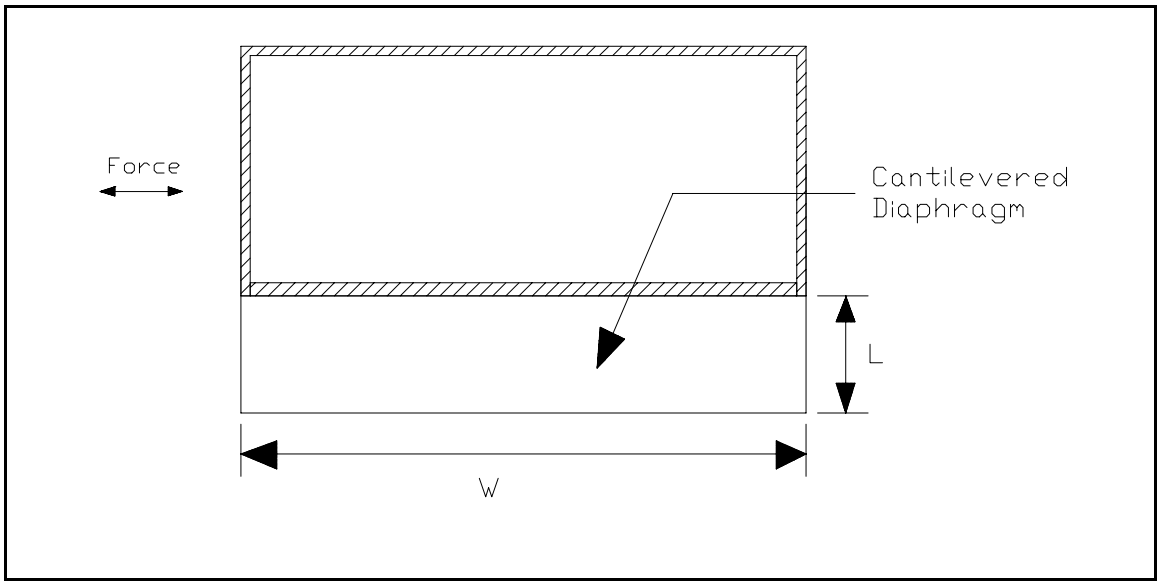

FIGURE 12.4.1.1-2 Diaphragm length and width for plan view of cantilevered diaphragm.

12.4.1.2 Aspect Ratio: The aspect ratio *l/w* of a diaphragm shall not be more than 4/1 for blocked wood structural panel diaphragms or 3/1 for unblocked wood structural panel diaphragms, single diagonally sheathed lumber diaphragms, and double diagonally sheathed lumber diaphragms.

12.4.1.3 Wood Structural Panel Sheathing: *Diaphragms* and *shear walls* sheathed with wood structural panel sheathing shall be permitted to be used to resist seismic forces based on the factored shear resistance, $\lambda\phi D$, set forth in Tables 12.4.3-1a and b. Where diaphragms are designated as blocked in Tables 12.4.3-1a and b, all joints in sheathing shall occur over framing members of the width prescribed in the tables.

The size and spacing of fasteners at wood structure panel sheathing boundaries, wood structural panel sheet edges, and intermediate supports shall be as given in Tables 12.4.3-1a and b Sheathing shall be arranged so that the width shall not be less than 2 ft (600 mm).

12.4.1.4 Single Diagonally Sheathed Lumber *Diaphragms*: The factored shear resistance, $\lambda\phi D$, of 0.22 Klf (3.2 kN/m) is permitted for single diagonally sheathed lumber diaphragms. Single diagonally sheathed lumber *diaphragms* shall consist of 1-by (actual ¾ in., 19 mm) sheathing boards laid at an angle of approximately 45 degrees (0.8 rad) to supports. Common nails at each intermediate support shall be two 8d (0.131 x 2½ in., 3 x 64 mm) for 1 by 6 (actual ¾ in by 5½ in., 19 mm by 140 mm) and three 8d (0.131 x 2½ in., 3 x 64 mm) for 1 by 8 (actual ¾ in. by 7½ in., 19 mm by 190 mm) boards. One additional nail shall be provided in each board at *diaphragm* boundaries. For box nails of the same penny weight, one additional nail shall be provided in each board at each intermediate support and two additional nails shall be provided in each board at *diaphragm* wall boundaries. End joints in adjacent boards shall be separated by at least one framing space between supports. Single diagonally sheathed lumber *diaphragms* shall be permitted to consist of 2-by (actual 1½ in., 38 mm) sheathing boards where 16d (0.131 by 2½ in., 3 by 64 mm) nails are substituted for 8d (0.131 by 2½ in., 3 x 64 mm) nails, end joints are

located as above, and the support is not less than 3 in. (actual 2½ in., 64 mm) width or 4 in. (actual 3½ in., 89 mm) depth.

12.4.1.5 Double Diagonally Sheathed Lumber *Diaphragms*: Double diagonally sheathed lumber *diaphragms* conform to the requirements for single diagonally sheathed lumber *diaphragms* in Sec. 12.4.1.4 and the requirements of this section, and shall be permitted to be used to resist seismic forces based on the factored shear resistance, $\lambda\phi D$, of 0.66 Klf (9.6 kN/m).

Double diagonally sheathed lumber *diaphragms* shall be sheathed with two layers of diagonal boards placed perpendicular to each other on the same face of the supports. Each *chord* shall be designed for the axial force induced and for flexure between supports due to a uniform load equal to 50 percent of the shear per foot in the *diaphragm*

12.4.2 Shear Walls:

12.4.2.1 Summing Shear Capacities: The shear values for shear panels of different capacities applied to the same side of the wall are not cumulative except as allowed in Tables 12.4.3-2a and 12.4.3.2b. The shear values for material of the same capacity applied to both faces of the same wall are cumulative. Where the material capacities are not equal, the allowable shear shall be either two times the smaller shear capacity or the capacity of the stronger side, whichever is greater. Summing shear capacities of dissimilar materials applied to opposite faces or to the same wall line is not allowed.

12.4.2.2 Adhesives: Adhesive attachment of shear wall sheathing is not permitted.

> **Exception:** Approved adhesive attachment systems shall be permitted in *Seismic Design Category* B where R = 1.5 and Ω_0 = 2.5 unless other values are approved.

12.4.2.3 Aspect Ratio: The shear wall aspect ratio, h/w, shall not exceed 2/1. See Sec. 12.1.3 for definitions of w and h.

> **Exception:** Shear wall aspect ratios greater than 2/1, but not exceeding 3.5/1, shall be permitted provided the factored shear resistance values in Tables 12.4.3-2a and 12.4.3-2b are multiplied by $2w/h$.

12.4.2.4 Shear Wall Anchorage: Where net uplift is induced, tie-down (hold-down) devices shall be used. Tie-down (hold-down) devices shall be attached to the end posts with nails, screws, or other fasteners. All tie-down devices shall be used only where the uplift resistance values are based on cyclic testing of wall assemblies and the test results indicate that the tie-down device does not reduce the stiffness, ductility, or capacity of the *shear wall* when compared to nailed-on devices. Nominal strength of the tie-down assemblies shall be equal to or greater than the forces resulting from factored resistance values of Tables 12.4.3-2a and 12.4.3-2b times Ω_o/1.3. The nominal strength of the tie-down device shall be defined as the average maximum test load the device can resist under cyclic testing without connection failure by either metal or wood failure. The stiffness of the tie-down assemblies shall be such as to prevent premature failure of the sheathing fasteners, and the effect of the tie-down displacement shall be included in drift calculations. End posts shall be selected such that failure across the net section of the post is not a limit state for the connection of the tie-down.

Foundation anchor bolts shall have a plate washer under each nut. The minimum plate washer sizes are as follows:

Bolt size	**Plate washer size for shear walls**
2 and 5/8 in. (13 and 16 mm)	1/4x3x3 in. (6x75x75 mm)
3/4, 7/8, and 1 in. (19, 22, and 25 mm)	3/8x3x3 in. (10x75x75 mm)

Hole diameters in the plate washer 3/16 in. (5 mm) larger than the bolt diameter are permitted provided that a standard cut washer is placed between the plate washer and the nut. Foundation anchor bolt embedment shall conform to the requirements of Chapters 6 and 8.

Bolts shall be placed a maximum of 2 in. (50 mm) from the sheathed side of wall sheathed on one face. Walls sheathed on both faces shall have the bolts staggered with the bolt a maximum of 2 in. (50 mm) from either side of the wall. Alternatively, for wall sheathed on both faces, the bolts shall be placed at the center of the foundation sill with the edge of the plate washer within 2 in. (13 mm) of each face of the wall. The plate washer width shall be a minimum of 3 in. (75 mm) and the plate thickness shall be determined by analysis using the upward force on the plate equal to the tension capacity of the bolt.

Anchor bolt and tie-down nuts shall be tightened without crushing the wood, and provision for preventing nuts from loosening shall be made just prior to covering the framing.

12.4.2.5 Framing: All framing used for shear wall construction shall conform to PS 20 for 2-by (1.5 in., 38 mm) or larger members.

12.4.2.6 Wood Structural Panel Sheathing: Shear walls sheathed with wood structural panel sheathing shall be permitted to be used to resist seismic forces based on the factored shear resistance, $\lambda\phi D$, set forth in Tables 12.4.2-6a and 12.4.2-6b.

The size and spacing of fasteners at wood structural panel sheathing boundaries, wood structural panel sheet edges, and intermediate supports shall be as given in Tables 12.4.2-6a and b.

All panel sheathing joints shall occur over studs or blocking. Sheathing shall be arranged so that the width shall not be less than 2 ft (600mm).

> **Exception:** For sheathing attached with the long direction of the panels perpendicular to the studs, a single sheathing panel with a minimum vertical dimension of 1 ft (300 mm) and a minimum horizontal dimension of 4 ft (1200 mm) is permitted to be used if it is located at mid-height of the wall, and is fully blocked and nailed.

12.4.2.7 Single Diagonally Sheathed Lumber Shear Walls: Single diagonally sheathed lumber diaphragms are permitted using the construction and resistance provisions of Sec. 12.4.1.4.

12.4.2.8 Double Diagonally Sheathed Lumber Shear Walls: Double diagonally sheathed lumber diaphragms are permitted using the construction and resistance provisions of Sec. 12.4.1.5.

12.4.2.9 Shear Walls With Openings Designed for Force Transfer Around Openings: Where structural-use panel shear walls with openings are designed for force transfer around the openings, the aspect ratio, *h/w*, limitations of Sec. 12.4.2.3 shall apply to the overall shear wall including openings and to each wall pier at the side of an opening. The height of a wall pier shall be defined as the clear height of the pier at the side of an opening. The width of a wall pier shall be defined as the sheathed width of the pier. Design and detailing of *boundary elements* around the opening shall be provided in accordance with Sec. 12.2.1 or ASCE 16. The width of a wall pier shall not be less than 2 ft (610mm).

12.4.3 Perforated Shear Walls: The provisions of Sec. 12.4.3 shall be permitted to be used for the design of perforated shear walls.

12.4.3.1 Definitions:

Adjusted shear resistance: The unadjusted factored shear resistance multiplied by the shear resistance adjustment factors of Table 12.4.3-1.

Perforated shear wall: A wood structural panel sheathed wall with openings but not specifically designed and detailed for force transfer around wall openings.

Perforated shear wall segment: A section of shear wall with full height sheathing that meets the aspect ratio limits of Sec. 12.4.2.3.

Unadjusted factored shear resistance: The factored shear resistance set forth in Tables 12.4.2-6a and 12.4.2-6b when the aspect ratio of any perforated shear wall segment used in calculation of perforated shear wall resistance does not exceed 2/1. When the aspect ratio of any perforated shear wall segment used in calculation of perforated shear wall resistance is greater than 2/1, but not exceeding 3.5/1, the unadjusted factored shear resistance shall be the factored shear resistance set forth in Tables 12.4.2-6a and 12.4.2-6b multiplied by 2*w/h*.

12.4.3.2 Limitations: The following limitations shall apply to the use of Sec. 12.4.4:

a. A perforated shear wall segment shall be located at each end of a perforated shear wall. Openings shall be permitted to occur beyond the ends of the perforated shear wall, however the width of such openings shall not be included in the width of the perforated shear wall.

b. The factored shear resistance set fort in Tables 12.4.2-6a and 12.4.2-6b shall not exceed 0.64 klf (9.4 kN/m).

c. A perforated shear wall shall not have out of plane (horizontal) offsets. Where out of plane offsets occur, portions of the wall on each side of the offset shall be considered as separate perforated shear walls.

d. Collectors for shear transfer shall be provided through the full length of the perforated shear wall**.**

e. A perforated shear wall shall have uniform top of wall and bottom of wall elevations. Perforated shear walls not having uniform elevations shall be designed by other methods.

f. Perforated shear wall height, *h*, shall not exceed 20 ft.

12.4.3.3 Perforated Shear Wall Resistance: The resistance of a perforated shear wall shall be calculated in accordance with the following:

12.4.3.3.1 Percent full height sheathing: The percent of full height sheathing shall be calculated as the sum of widths of perforated shear wall segments divided by the total width of the perforated shear wall including openings.

12.4.3.3.2 Maximum opening height ratio: The maximum opening height ratio shall be calculated by dividing the maximum opening clear height by the shear wall height, *h*.

12.4.3.3.3 Adjusted shear resistance: The adjusted shear resistance shall be calculated by multiplying the unadjusted factored shear resistance by the shear resistance adjustment factors of Table 12.4.4-1. For intermediate percentages of full height sheathing the values in Table 12.4.4-1 are permitted to be interpolated.

12.4.3.3.4 Perforated shear wall resistance: The perforated shear wall resistance shall be equal to the adjusted shear resistance times the sum of the widths of the perforated shear wall segments.

12.4.3.4 Anchorage and Load Path: Design of perforated shear wall anchorage and load path shall conform to the requirements of this section or shall be calculated using principles of mechanics. Except as modified by this section, wall framing, sheathing, sheathing attachment, and fastener schedules shall conform to the requirements of 12.4.2.6 and Tables 12.4.3-2a and 12.4.3-2b.

12.4.3.4.1 Uplift anchorage at perforated shear wall ends: Anchorage for uplift forces due to overturning shall be provided at each end of the perforated shear wall. The uplift anchorage shall conform to the requirements of Sec. 12.4.2.4 using the factored resistance values set forth in Tables 12.4.2-6a and 12.4.2-6b times $\Omega_0/1.3$.

12.4.3.4.2 Anchorage for in-plane shear: The unit shear force ,*v*, transmitted into the top of a perforated shear wall, out of the base of the perforated shear wall at full height sheathing, and into collectors (drag struts) connecting shear wall segments, shall be calculated in accordance with the following:

$$v = \frac{V}{C_o \sum L_i}$$

where:

v = unit shear force (klf, kN/m),

V = shear force in perforated shear wall (kips, kN),

h = shear wall height (ft, mm/1000),

C_o = shear resistance adjustment factor from Table 12.4.4-1, and

ΣL_i = sum of widths of perforated shear wall segments (ft, mm/1000).

12.4.3.4.3 Uplift anchorage between perforated shear wall ends: In addition to the requirements of Sec. 12.4.4.4.1, perforated shear wall bottom plates at full height sheathing shall be anchored for a uniform uplift force, *t*, equal to the unit shear force, *v*, determined in Sec. 12.4.4.4.2.

12.4.3.4.4. Compression chords: Each end of each perforated shear wall segment shall be designed for a compression force, *C*, from each story calculated in accordance with the following:

$$C = V\,h\,/\,(C_o \sum L_i)$$

where:

C = compression chord force (kips, kN),

V = shear force in perforated shear wall (kips, kN),

h = shear wall height (ft, mm/1000),

C_o = shear resistance adjustment factor from Table 12.4.4-1, and

$\sum L_i$ = sum of widths of shear wall segments (ft, mm/1000).

12.4.3.4.5. Load path: A load path to the foundation shall be provided for each uplift force, *T* and *t*, for each shear force, *v*, and for each compression force, *C*. Elements resisting shear wall forces contributed by multiple stories shall be designed for the sum of forces contributed by each story.

TABLE 12.4.3-1 Shear Resistance Adjustment Factor, C_o

Wall Height (*h*)	Maximum Opening Height Ratio[a] and Height				
	***h*/3**	***h*/2**	**2*h*/3**	**5*h*/6**	***h***
8'-0" (2440 mm)	2'-8" (810 mm)	4'-0" (1220 mm)	5'-4" (1630 mm)	6'-8" (2030 mm)	8'-0" (2440 mm)
10'-0" (3050 mm)	3'-4" (1020 mm)	5'-0" (1530 mm)	6'-8" (2030 mm)	8'-4" (2540 mm)	10'-0" (3050 mm)
Percent Full-Height Sheathing[b]	**Shear Resistance Adjustment Factor**				
10%	1.00	0.69	0.53	0.43	0.36
20%	1.00	0.71	0.56	0.45	0.38
30%	1.00	0.74	0.59	0.49	0.42
40%	1.00	0.77	0.63	0.53	0.45
50%	1.00	0.80	0.67	0.57	0.50
60%	1.00	0.83	0.71	0.63	0.56
70%	1.00	0.87	0.77	0.69	0.63
80%	1.00	0.91	0.83	0.77	0.71
90%	1.00	0.95	0.91	0.87	0.83
100%	1.00	1.00	1.00	1.00	1.00

[a] See Sec. 12.4.3.3.2.
[b] See Sec. 12.4.3.3.1.

12.5 CONVENTIONAL LIGHT-FRAME CONSTRUCTION:

12.5.1 Scope: Conventional light-frame construction is a system constructed entirely of repetitive horizontal and vertical wood light-framing members selected from tables in NFoPA T903 and conforming to the framing and bracing requirements of the CABO Code except as modified by the provisions in this section. *Structures* with concrete or masonry walls above the basement *story* shall not be considered to be conventional light-frame construction. Construction with concrete and masonry basement walls shall be in accordance with the CABO Code or equivalent. Conventional light-frame construction is limited to *structures* with bearing wall heights not exceeding 10 ft (3 m) and the number of stories prescribed in Table 12.5.1-1. The gravity dead load of the construction is limited to 15 psf (720 Pa) for roofs and exterior walls and 10 psf (480 Pa) for floors and partitions and the gravity live load is limited to 40 psf (1915 Pa).

Exceptions: Masonry veneer is acceptable for:

1. The first *story above grade* or the first two stories above grade when the lowest story has concrete or masonry walls of *Seismic Design Category* B and C *structures*.
2. The first two stories above grade or the first three stories above grade when the lowest story has concrete or masonry walls of Seismic Design Category B *structures,* provided structural use panel wall bracing is used and the length of bracing provided is 1.5 times the length required by Table 12.5.2-1.

The requirements of this section are based on platform construction. Other framing systems must have equivalent detailing to ensure force transfer, continuity, and compatible deformation.

When a *structure* of otherwise conventional light-frame construction contains structural elements not conforming to Sec. 12.5, those elements shall have an engineered design to resist the forces specified in Chapter 5 in accordance with Sec. 12.2.2.1.

12.5.1.1 Irregular Structures: Irregular *structures* in *Seismic Design Categories* C and D of conventional light-frame construction shall have an engineered *lateral-force-resisting system* designed to resist the forces specified in Chapter 5 in accordance with Sec. 12.2.1. A *structure* shall be considered to have an irregularity when one or more of the conditions described in Sec. 12.5.1.1.1 to 12.5.1.1.7 are present.

12.5.1.1.1: A *structure* shall be considered to have an irregularity when exterior *braced wall panels* are not in one plane vertically from the foundation to the uppermost *story* in which they are required. See Figure 12.5.1.1.1-1.

Exceptions: Floors with cantilevers or setbacks not exceeding four times the nominal depth of the floor joists (see Figure 12.5.1.1.1-2) are permitted to support *braced wall panels* provided:

1. Floor joists are 2 in. by 10 in. (actual 1½ by 9¼ in., 38 by 235 mm) or larger and spaced not more than 16 inches (405 mm) on center.
2. The ratio of the back span to the cantilever is at least 2 to 1.
3. Floor joists at ends of *braced wall panels* are doubled.
4. A continuous rim joist is connected to the ends of all cantilevered joists. The rim joist shall be permitted to be spliced using a metal tie not less than 0.058 in. (2 mm) (16 galvanized gage) and 1½ in. (38 mm) wide fastened with six 16d (0.162 by 3½ in, 4 by 89 mm) common nails on each side. Steel used shall have a minimum yield of 33,000 psi (228 MPa) such as ASTM 653 Grade 330 structural quality or ASTM A446 Grade A galvanized steel.
5. Gravity loads carried by joists at setbacks or the end of cantilevered joists are limited to single *story* uniform wall and roof loads and the reactions from headers having a span of 8 ft (2440 mm) or less.

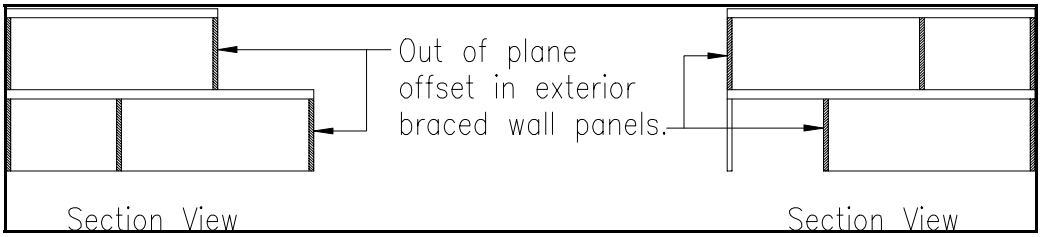

FIGURE 12.5.1.1.1-1 Out-of-plane exterior walls irregularity.

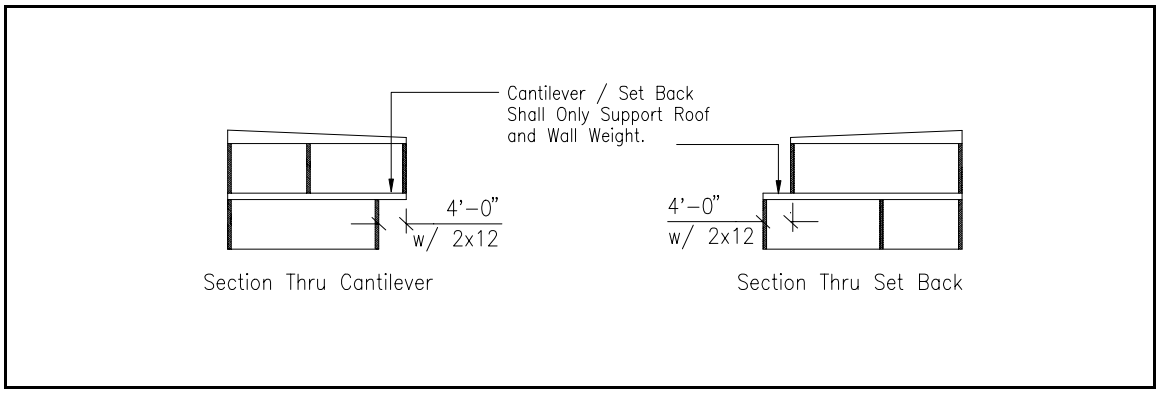

FIGURE 12.5.1.1.1-2 Cantilever/setback irregularity for exterior walls.

12.5.1.1.2: A *structure* shall be considered to have an irregularity when a section of floor or roof is not laterally supported by *braced wall lines* on all edges. See Figure 12.5.1.1.2-1.

Exception: Portions of roofs or floors that do not support *braced wall panels* above shall be permitted to extend up to 6 ft (1830 mm) beyond a *braced wall line*. See Figure 12.5.1.1.2-2.

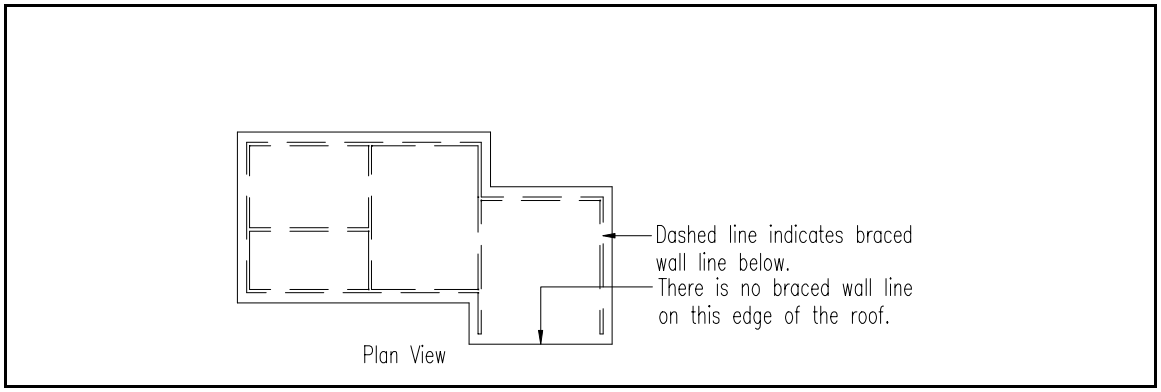

FIGURE 12.5.1.1.2-1 Unsupported diaphragm irregularity.

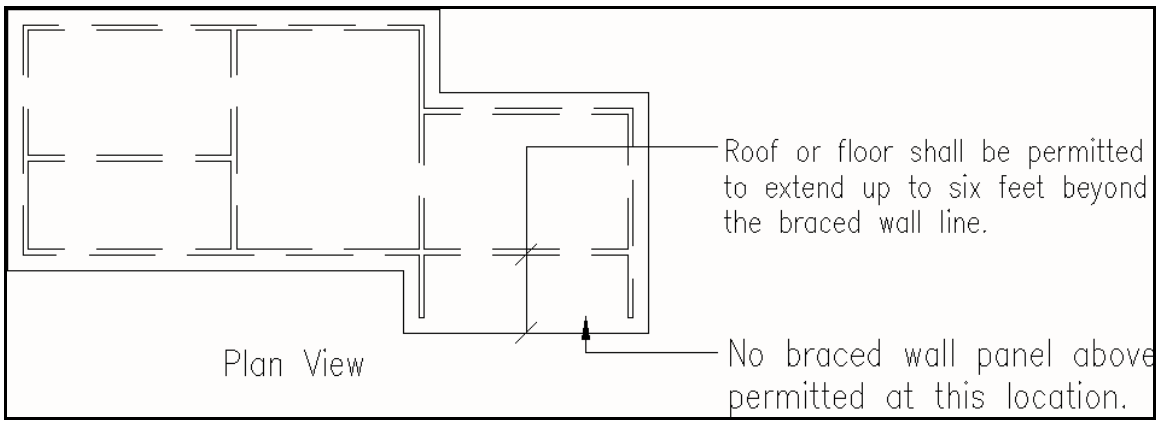

FIGURE 12.5.1.1.2-2 Allowable cantilevered diaphragm.

12.5.1.1.3: A *structure* shall be considered to have an irregularity when the end of a required *braced wall panel* extends more than 1 ft (305 mm) over an opening in the wall below. This requirement is applicable to *braced wall panels* offset in plane and to *braced wall panels* offset out of plane as permitted by the exception to Sec. 12.5.1.1.1. See Figure 12.5.1.1.3.

Exception: *Braced wall panels* shall be permitted to extend over an opening not more than 8 ft (2440 mm) in width when the header is a 4-in. by 12-in. (actual 3½ by 11¼ in., 89 by 286 mm) or larger member.

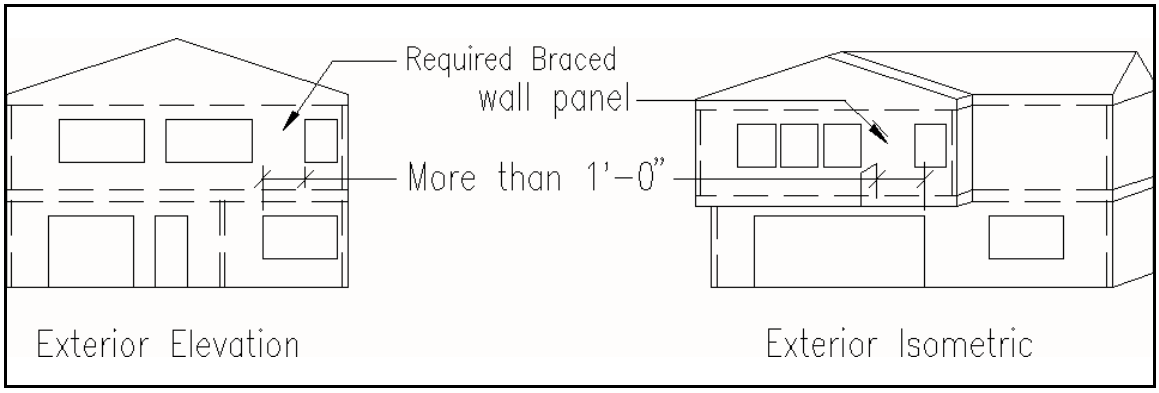

FIGURE 12.5.1.1.3 Opening in wall below irregularity.

12.5.1.1.4: A *structure* shall be considered to have an irregularity when portions of a floor level are vertically offset such that the framing members on either side of the offset cannot be lapped or tied together in an approved manner. See Figure 12.5.1.1.4.

Exception: Framing supported directly by foundations.

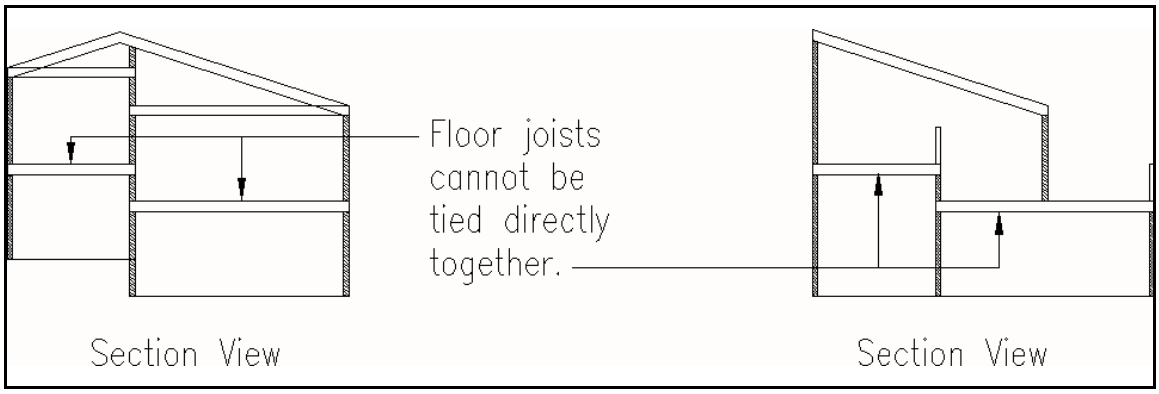

FIGURE 12.5.1.1.4 Vertical offset irregularity.

12.5.1.1.5: A *structure* shall be considered to have an irregularity when *braced wall lines* are not perpendicular to each other. See Figure 12.5.1.1.5

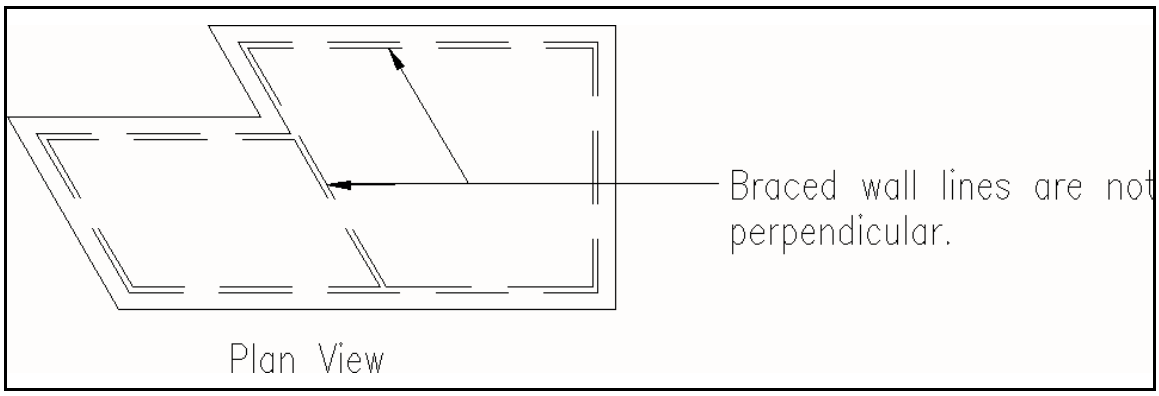

FIGURE 12.5.1.1.5 Nonperpendicular wall irregularity.

12.5.1.1.6 Diaphragm Openings: A *structure* shall be considered to have an irregularity when openings in floor and roof *diaphragms* having a maximum dimension greater than 50 percent of the distance between lines of bracing or an area greater than 25 percent of the area between orthogonal pairs of *braced wall lines* are present. See Figure 12.5.1.1.6.

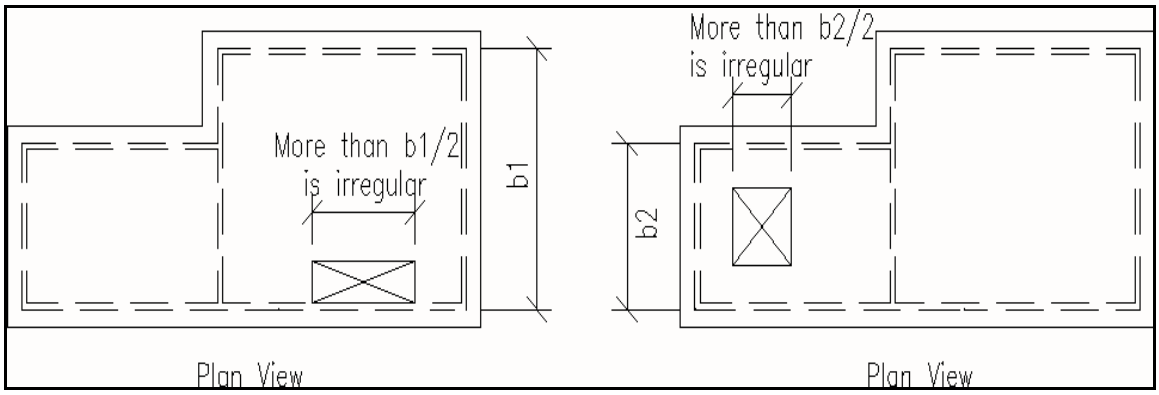

FIGURE 12.5.1.1.6 Diaphragm opening irregularity.

12.5.1.1.7 Stepped Foundation: A *structure* shall be considered to have an irregularity when the shear walls of a single story vary in height more than 6 ft (1800 mm).

12.5.2 Braced Walls: The following are the minimum braced wall requirements.

12.5.2.1 Spacing Between Braced Wall Lines: Interior and exterior *braced wall lines* shall be located at the spacing indicated in Table 12.5.1-1.

12.5.2.2 Braced Wall Line Sheathing Requirements: All b*raced wall lines* shall be braced by one of the types of sheathing prescribed in Table 12.5.2-1. The required sum of lengths of *braced wall panels* at each *braced wall line* is prescribed in Table 12.5.2-1. *Braced wall panels* shall be distributed along the length of the *braced wall line* with sheathing placed at each end of the wall or partition or as near thereto as possible. To be considered effective as bracing, each *braced wall panel* shall conform to Sec. 602.9 of the CABO Code. All panel sheathing joints shall occur over studs or blocking. Sheathing shall be fastened to all studs and top and bottom plates and at panel edges occurring over blocking. All wall framing to which sheathing used for bracing is applied shall be 2-by (actual 1½ in., 38 mm) or larger members.

Cripple walls shall be braced as required for *braced wall lines* and shall be considered an additional *story*. Where interior post and girder framing is used, the capacity of the *braced wall panels* at exterior *cripple walls* shall be increased to compensate for length of interior braced wall eliminated by increasing the length of the sheathing or increasing the number of fasteners.

12.5.2.3 Attachment:

12.5.2.3.1: Nailing of *braced wall panel* sheathing shall be not less than the minimum included in Tables 12.4.2-6a and 12.4.2-6b or as prescribed in Table 12.5.2-1.

12.5.2.3.2: Nailing for diagonal boards shall be as prescribed in Sec. 12.4.3.3 and 12.4.3.4.

12.5.2.3.3 : Adhesive attachment of wall sheathing is not permitted.

12.5.3 Detailing Requirements: The following requirements for framing and connection details shall apply as a minimum.

12.5.3.1 Wall Anchorage: Anchorage of *braced wall line* sills to concrete or masonry foundations shall be provided. Such anchorage shall conform to the requirements in Figure 403.1a of Sec. 403 of the CABO code except that such anchors shall be spaced at not more than 4 ft (1220 mm) on center for *structures* over two stories in height. For *Seismic Design Categories* C, D and E, plate washers, a minimum of ¼ in. by 3 in. by 3 in. in size, shall be provided between the foundation sill plate and the nut. Other anchorage devices having equivalent capacity shall be permitted.

12.5.3.2 Top Plates: Stud walls shall be capped with double-top plates installed to provide overlapping at corners and intersections. End joints in double-top plates shall be offset at least 4 ft (1220 mm). Single top plates shall be permitted to be used when they are spliced by framing devices providing capacity equivalent to the lapped splice prescribed for double top plates.

12.5.3.3 Bottom Plates: Studs shall have full bearing on a 2-by (actual 1½ in., 38 mm) or larger plate or sill having a width at least equal to the width of the studs.

12.5.3.4 Braced Wall Panel Connections: Accommodations shall be made to transfer forces from roofs and floors to *braced wall panels* and from the *braced wall panels* in upper stories to the *braced wall panels* in the *story* below. Where platform framing is used, such transfer at *braced wall panels* shall be accomplished in accordance with the following:

1. All *braced wall panel* top and bottom plates shall be fastened to joists, rafters, or full depth blocking. *Braced wall panels* shall be extended and fastened to roof framing at intervals not to exceed 50 ft (15.2 m).

   Exception: Where roof trusses are used, provisions shall be made to transfer lateral forces from the roof diaphragm to the braced wall

2. Bottom plate fastening to joist or blocking below shall be with not less than 3-16d (0.162 by 3½ in., 4 by 89 mm) nails at sixteen inches on center.

3. Blocking shall be nailed to the top plate below with not less than 3-8d (0.131 by 2½ in., 3 by 64 mm) toenails per block.

4. Joists parallel to the top plates shall be nailed to the top plate with not less than 8d (0.131 by 2½ in., 3 by 64 mm) toenails at 6 in. (150 mm) on center.

In addition, top plate laps shall be nailed with not less than 8-16d (0.162 by 3½ in., 4 by 89 mm) face nails on each side.

12.5.3.5 Foundations Supporting Braced Wall Panels: For *structures* with maximum plan dimensions not over 50 ft (15250 mm) foundations supporting *braced wall panels* are required at exterior walls only. *Structures* with plan dimensions greater than 50 ft (15250 mm) shall, in addition, have foundations supporting all required interior *braced wall panels*. Foundation to braced wall connections shall be made at every foundation supporting a *braced wall panel*. The connections shall be distributed along the length of the *braced wall line*. Where all-wood foundations are used, the force transfer shall be determined based on calculation and shall have capacity greater than or equal to the connections required by Sec. 12.5.3.1.

12.5.3.6 Stepped Footings: Where the height of a required *braced wall panel* extending from foundation to floor above varies more than 4 ft. (1220 mm) (see Figure 12.5.3.6), the following construction shall be used:

a. Where only the bottom of the footing is stepped and the lowest floor framing rests directly on a sill bolted to the footings, the requirements of Sec. 12.5.3.1 shall apply.

b. Where the lowest floor framing rests directly on a sill bolted to a footing not less than 8 ft (2440 mm) in length along a line of bracing, the line shall be considered to be braced. The double plate of the cripple stud wall beyond the segment of footing extending to the lowest framed floor shall be spliced to the sill plate with metal ties, one on each side of the sill and plate not less than 0.058 in. (16 gage, 2mm) by 1.5 in. (38 mm) wide by 4.8 in. (122 mm) with eight 16d (0.162 by 3.5 in., 4 by 89 mm) common nails on each side of the splice location (see Figure 12.5.3.6). Steel used shall have a minimum yield of 33,000 psi (228 MPa) such as ASTM 653 Grade 330 structural quality or ASTM A446 Grade A galvanized steel.

c. Where *cripple walls* occur between the top of the footing and the lowest floor framing, the bracing requirements for a *story* shall apply.

12.5.3.7 Detailing for Openings in Diaphragms: For openings with a dimension greater than 4 ft (1220 mm) or openings in *structures* in *Seismic Design Categories* D and E, the following minimum detail shall be provided. Blocking shall be provided beyond headers and metal ties not less than 0.058 in. (16 gage, 2 mm) by 1.5 in. (38 mm) wide by 4.8 in. (122 mm) with eight 16d (0.162 by 3.5 in., 4 by 89 mm) common nails on each side of the header-joist intersection (see Figure 12.5.3.7). Steel used shall have a minimum yield of 33,000 psi (228 MPa) such as ASTM 653 Grade 330 structural quality or ASTM A446 Grade A galvanized steel.

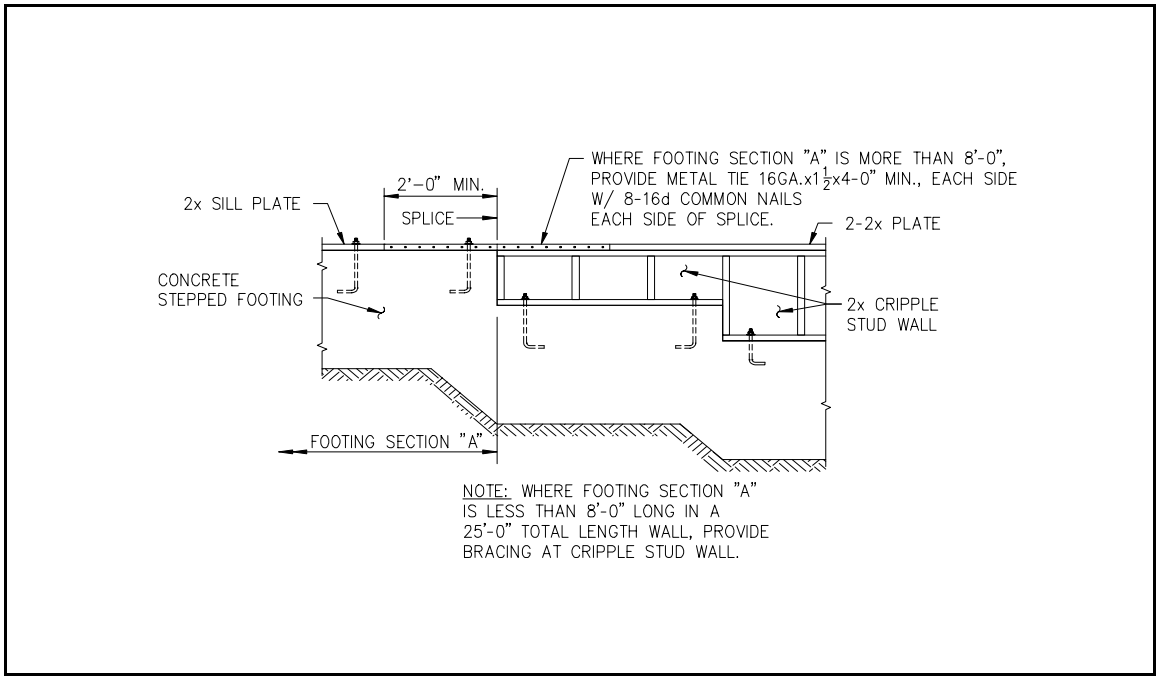

FIGURE 12.5.3.6 Stepped footing detail.

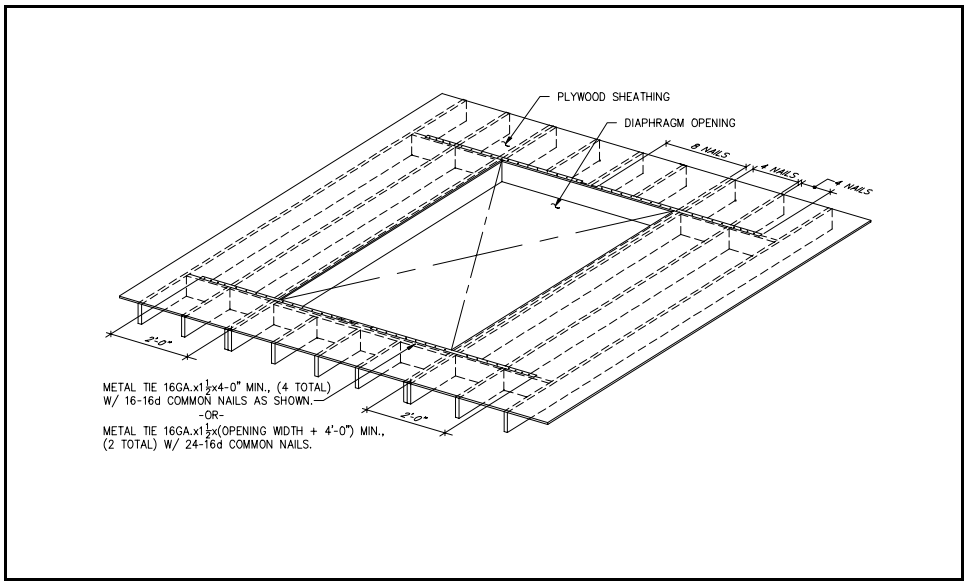

FIGURE 12.5.3.7 Detail for diaphragm opening.

12.6 SEISMIC DESIGN CATEGORY A: *Structures* assigned to *Seismic Design Category* A are permitted to be designed and constructed using any applicable materials and procedures permitted in the reference documents and, in addition, shall conform to the requirements of Sec. 5.2.6.1.2. *Structures* constructed in compliance with Sec. 12.5 are deemed to comply with Sec. 5.2.6.1.2.

Exceptions:

1. Where Sec. 1.2.1, Exception 1, is applicable, one- and two-family detached dwellings are exempt from the requirements of the *Provisions*.
2. Where Sec. 1.2.1, Exception 2, is applicable, one- and two-family dwellings that are designed and constructed in accordance with the conventional construction requirements of Sec. 12.5 are exempt from other requirements of the *Provisions.*

12.7 SEISMIC DESIGN CATEGORIES B, C, AND D: *Structures* assigned to *Seismic Design Categories* B, C, and D shall conform to the requirements of this section, and Sec. 5.2.6.1.2.

Exceptions:

1. Where Sec. 1.2.1, Exception 1, is applicable, one- and two-family detached dwellings are exempt from the requirements of the *Provisions*.
2. Where Sec. 1.2.1, Exception 2, is applicable, one- and two-family dwellings that are designed and constructed in accordance with the conventional construction requirements of Sec. 12.5 are exempt from other requirements of the *Provisions.*

12.7.1 Conventional Light-Frame Construction: Conventional light-frame construction shall meet the requirements of Sec. 12.5. Alternatively, such *structures* shall meet the requirements of Sec. 12.7.2. See Sec. 12.2.2.1 for design of nonconventional elements.

12.7.2 Engineered Construction: All engineered wood construction shall meet the requirements of Sec. 12.3 and 12.4.

12.8 SEISMIC DESIGN CATEGORIES E AND F: *Structures* assigned to *Seismic Design Categories* E and F shall conform to all of the requirements for engineered construction in accordance with Sec. 12.3 and 12.4 and to the additional requirements of this section.

> **Exception:** *Structures* assigned to *Seismic Use Group* I that are designed and constructed in accordance with the requirements of Sec. 12.5 are permitted.

12.8.1 Limitations: *Structures* shall comply with the requirements given below.

12.8.1.1 Unblocked *structural-use panel* sheathing *diaphragms* shall not be considered to be part of the *seismic-force-resisting system*. *Structural-use panel* sheathing used for *diaphragms* and *shear walls* that are part of the *seismic-force-resisting system* shall be applied directly to the framing members.

> **Exception:** *Structural-use panel* sheathing may be used as a *diaphragm* when fastened over solid lumber planking or laminated decking provided the panel joints and lumber planking or laminated decking joints do not coincide.

12.8.1.2 In addition to the requirements of Sec. 12.3.4.1, the factored shear resistance, $\lambda\phi D$, for *structural-use panel* sheathed *shear walls* used to resist seismic forces in *structures* with concrete or masonry walls shall be one-half the values set forth in Tables 12.4.3-2a and 12.4.3-2b.

TABLE 12.4.3-1a Factored Shear Resistance in Kips per Foot for Horizontal Wood Diaphragms with Framing Members of Douglas Fir-Larch or Southern Pine for Seismic Loading[a,b]

Panel Grade	Fastener[c]		Minimum nominal panel thickness (in.)	Minimum nominal width of framing (in.)	Lines of fasteners	Blocked Diaphragms							Unblocked Diaphragms[d]	
	Type	Minimum penetration in framing (in.)				Fastener spacing at diaphragm boundaries (all cases), at continuous panel edges parallel to load (Cases 3 and 4) and at all panel edges (Cases 5 and 6)[e]							Fastener spacing at 6 in. centers at supported edges	
						6	4		2-1/2[f]		2[f]			
						Spacing per line at other panel edges (in.)							Case 1	Cases 2, 3 4, 5, and 6
						6	6	4	4	3	3	2		
Structural I	6d common	1-1/4	3/8	2	1	0.24	0.33	---	0.49	---	0.55	---	0.21	0.16
				3	1	0.27	0.36	---	0.55	---	0.62	---	0.24	0.18
	8d common	1-3/8	3/8	2	1	0.35	0.47	---	0.69	---	0.78	---	0.31	0.23
				3	1	0.39	0.52	---	0.78	---	0.88	---	0.34	0.26
	10d[g] common	1-1/2	15/32	2	1	0.42	0.55	---	0.83	---	0.95	---	0.37	0.28
				3	1	0.47	0.62	---	0.94	---	1.07	---	0.42	0.31
	10d[g] common	1-1/2	23/32	3	2	---	0.85	1.13	1.22	1.60	---	---	---	---
				4	2	---	0.98	1.27	1.40	1.83	---	---	---	---
				4	3	---	1.22	1.70	1.79	2.35	---	---	---	---
	14 gauge staples	2	23/32	3	2	---	0.78	0.78	1.09	1.17	1.35	1.56	---	---
				4	3	---	1.09	1.17	1.48	1.76	1.87	2.34	---	---
Sheathing, single floor and other grades covered in Ref. 9-10 and 9-11	6d common	1-1/4	3/8	2	1	0.24	0.33	---	0.49	---	0.55	---	0.21	0.16
				3	1	0.27	0.36	---	0.55	---	0.62	---	0.24	0.18
	8d common	1-3/8	3/8	2	1	0.31	0.42	---	0.62	---	0.71	---	0.28	0.21
				3	1	0.35	0.47	---	0.70	---	0.79	---	0.31	0.23
			7/16	2	1	0.33	0.44	---	0.66	---	0.75	---	0.30	0.22
				3	1	0.37	0.49	---	0.74	---	0.84	---	0.33	0.25
			15/32	2	1	0.35	0.47	---	0.69	---	0.78	---	0.31	0.23
				3	1	0.39	0.52	---	0.78	---	0.88	---	0.34	0.26
	10d[g] common	1-1/2	15/32	2	1	0.38	0.50	---	0.75	---	0.85	---	0.33	0.25
				3	1	0.42	0.56	---	0.85	---	0.96	---	0.38	0.28
			19/32	2	1	.042	0.55	---	0.83	---	0.95	---	0.37	0.28
				3	1	0.47	0.62	---	0.94	---	1.07	---	0.42	0.31
			23/32	3	2	---	0.84	1.13	1.22	1.59	---	---	---	---
				4	2	---	0.98	1.27	1.40	1.81	---	---	---	---
				4	3	---	1.22	1.70	1.78	1.96	---	---	---	---
	14 gauge staples	2	23/32	3	2	---	0.78	0.78	1.07	1.17	1.33	1.56	---	---
				4	3	---	1.07	1.17	1.46	1.76	1.82	1.96	---	---

NOTES for TABLE 12.4.3-1a

[a] $\lambda = 1.0$ $\varphi = 0.65$

[b] *l/w* shall not be more than 4/1 for blocked diaphragms or more than 3/1 for unblocked diaphragms. For framing members of other species set forth in Ref. 12-1, Table 12A, with the range of specific gravity (SG) noted, allowable shear values shall be calculated for all panel grades by multiplying the values from the table above for nail size and actual panel grade by the following factor: Specific Gravity Adjustment Factor = (1-(0.5 - SG)), Where SG = Specific Gravity of the framing lumber. This adjustment factor shall not be greater than 1.

[c] Space nails along intermediate framing members at 12 in. centers except where spans are greater than 32 in..; space nails at 6 in. centers.

[d] Blocked values are permitted to be used for 1-1/8 in. panels with tongue-and-groove edges where 1 in. by 3/8 in.. crown by No. 16 gauge staples are driven through the tongue-and-groove edges 3/8 in. from the panel edge so as to penetrate the tongue. Staples shall be spaced at one half the boundary nail spacing for Cases 1 and 2 and at one third the boundary nail spacing for Cases 3 through 6.

[e] Maximum shear for Cases 3 through 6 is limited to 1500 pounds per foot.

[f] For values listed for 2 in. nominal framing member width, the framing members at adjoining panel edges shall be 3 in. nominal width. Nails at panel edges shall be placed in two lines at these locations.

[g] Framing at adjoining panel edges shall be 3 in. nominal or wider and nails shall be staggered where 10d nails having penetration into framing of more than 1-5/8 in. are spaced 3 in. or less on center.

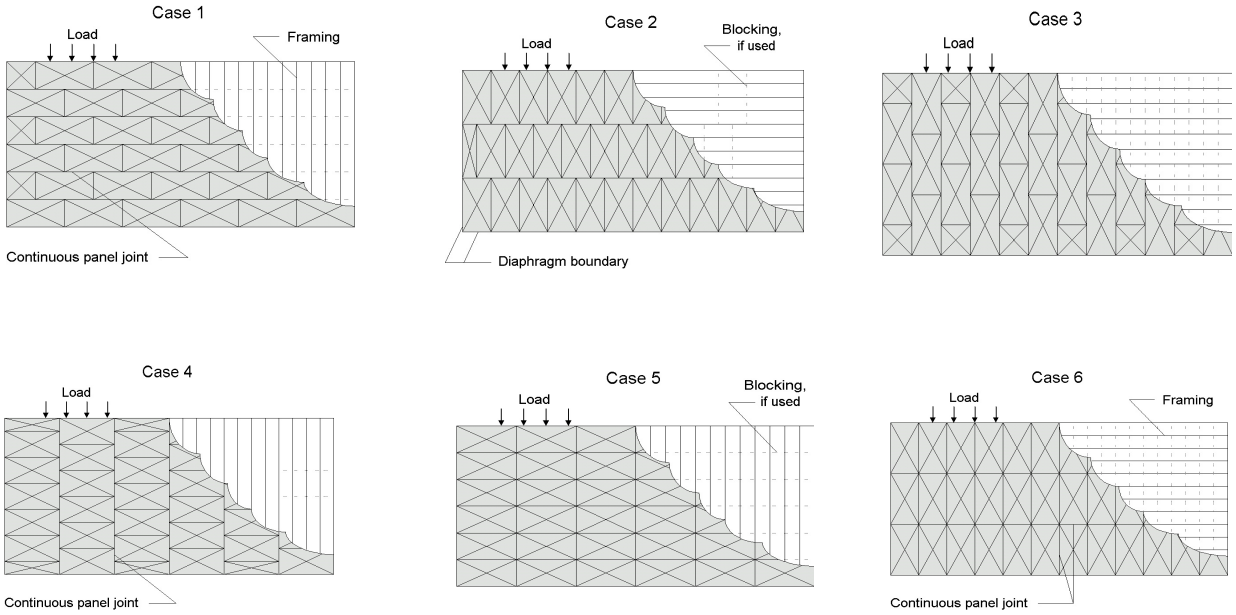

TABLE 12.4.3-1b Factored Shear Resistance in kiloNewtons per Meter for Horizontal Wood Diaphragms with Framing Members of Douglas Fir-Larch or Southern Pine for Seismic Loading[a,b]

Panel Grade	Fastener[c]		Minimum nominal panel thick-ness (mm.)	Minimum nominal width of framing (mm.)	Lines of fasteners	Blocked Diaphragms							Unblocked Diaphragms[d]	
	Type	Minimum penetration in framing (mm.)				Fastener spacing at diaphragm boundaries (all cases), at continuous panel edges parallel to load (Cases 3 and 4) and at all panel edges (Cases 5 and 6) (mm)[e]							Fastener spacing at 150 mm centers at supported edges	
						150	100		65[f]		50[f]			
						Spacing per line at other panel edges (mm.)							Case 1	Cases 2, 3 4, 5, and 6
						150	150	100	100	75	75	50		
Structural I	6d common	32	9.5	50	1	3.5	4.7	---	7.1	---	8.0	---	3.1	2.4
				75	1	4.0	5.3	---	8.0	---	9.0	---	3.5	2.7
	8d common	35	9.5	50	1	5.1	6.8	---	10.1	---	11.4	---	4.6	3.4
				75	1	5.7	7.6	---	11.4	---	12.8	---	5.0	3.8
	10d[g] common	38	12	50	1	6.1	8.1	---	12.1	---	13.8	---	5.4	4.1
				75	1	6.8	9.1	---	13.7	---	15.6	---	6.1	4.6
	10d[g] common	38	18	75	2	---	12.3	16.5	17.8	23.3	---	---	---	---
				100	2	---	14.3	18.6	20.5	26.8	---	---	---	---
				100	3	---	17.8	24.8	26.1	34.1	---	---	---	---
	14 gauge staples	50	18	75	2	---	11.4	11.4	15.9	17.1	19.7	22.8	---	---
				100	3	---	15.9	17.1	21.6	25.6	27.3	34.1	---	---
Sheathing, single floor and other grades covered in Ref. 9-10 and 9-11	6d common	32	9.5	50	1	3.5	4.7	---	7.1	---	8.0	---	3.3	2.4
				75	1	4.0	5.3	---	8.0	---	9.0	---	3.5	2.7
	8d common	35	9.5	50	1	4.6	6.1	---	9.1	---	10.3	---	4.1	3.0
				75	1	5.1	6.8	---	10.2	---	11.6	---	4.6	3.4
			11	50	1	4.8	6.5	---	10.9	---	10.9	---	4.4	3.2
				75	1	5.4	7.2	---	12.2	---	12.2	---	4.8	3.6
			12	50	1	5.1	6.9	---	10.1	---	11.4	---	4.5	3.4
				75	1	5.7	7.6	---	11.4	---	12.8	---	5.0	3.8
	10d[g] common	38	12	50	1	5.5	7.3	---	10.9	---	12.4	---	4.8	3.6
				75	1	6.2	8.2	---	12.3	---	13.9	---	5.5	4.1
			15	50	1	6.1	8.1	---	12.1	---	13.8	---	5.4	4.1
				75	1	6.8	9.1	---	13.7	---	15.6	---	6.1	4.6
			18	75	2	---	12.2	16.5	17.7	23.2	---	---	---	---
				100	2	---	14.2	18.6	20.4	26.5	---	---	---	---
				100	3	---	17.7	24.8	26.4	28.6	---	---	---	---
	14 gauge staples	50	18	75	2	---	11.4	11.4	15.6	17.1	19.4	22.8	---	---
				100	3	---	15.6	17.1	21.2	25.6	26.6	28.6	---	---

NOTES for TABLE 12.4.3-1b

[a] $\lambda = 1.0$ $\varphi = 0.65$

[b] *l/w* shall not be more than 4/1 for blocked diaphragms or more than 3/1 for unblocked diaphragms. For framing members of other species set forth in ASCE 16, Table 12A, with the range of specific gravity (SG) noted, allowable shear values shall be calculated for all panel grades by multiplying the values from the table above for nail size and actual panel grade by the following factor:

Specific Gravity Adjustment Factor = (1-(0.5 - SG)), Where SG = Specific Gravity of the framing lumber. This adjustment factor shall not be greater than 1.

[c] Space nails along intermediate framing members at 300 mm centers except where spans are greater than 810 mm; space nails at 150 mm centers.

[d] Blocked values are permitted to be used for 28.5 mm panels with tongue-and-groove edges where 25 mm by 9 mm crown by No. 16 gauge staples are driven through the tongue-and-groove edges 9 mm. from the panel edge so as to penetrate the tongue. Staples shall be spaced at one half the boundary nail spacing for Cases 1 and 2 and at one third the boundary nail spacing for Cases 3 through 6.

[e] Maximum shear for Cases 3 through 6 is limited to 22.8 kiloNewtons per meter.

[f] For values listed for 50 mm nominal framing member width, the framing members at adjoining panel edges shall be 75 mm nominal width. Nails at panel edges shall be placed in two lines at these locations.

[g] Framing at adjoining panel edges shall be 75 mm nominal or wider and nails shall be staggered where 10d nails having penetration into framing of more than 41 mm are spaced 75 mm or less on center.

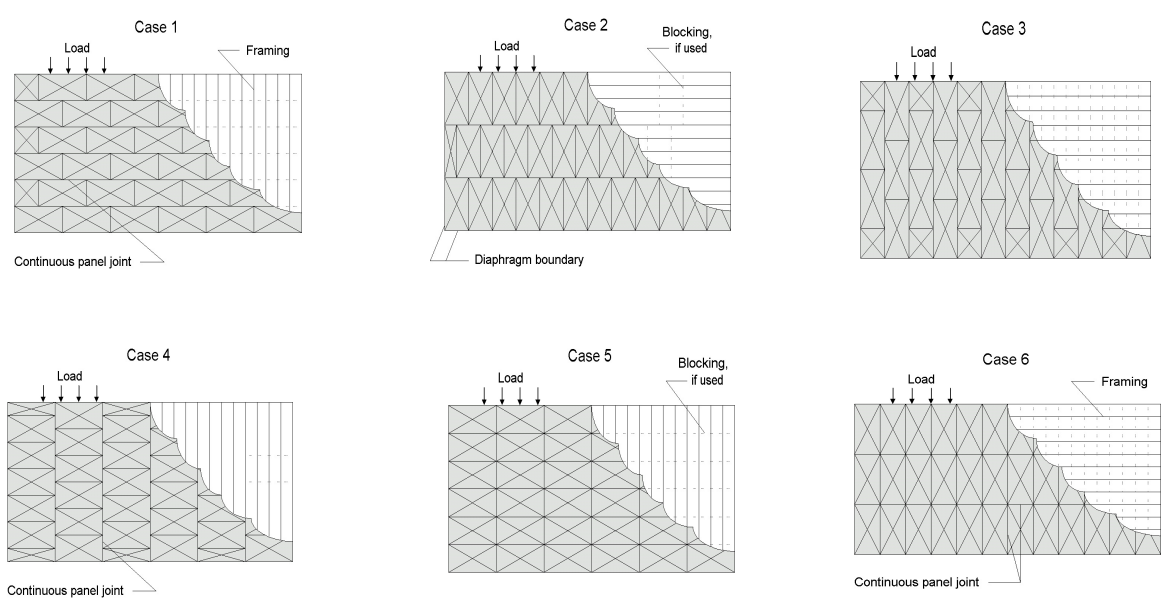

TABLE 12.4.3-2a Factored Shear Resistance in Kips per Foot (KLF) for Seismic Forces on Structural Use Panel Shear Walls with Framing Members of Douglas Fir-Larch or Southern Pine[a,b,c]

Panel Grade	Nail Size (Common or Hot-Dipped Galvanized Box)	Minimum Penetration in Framing (in.)	Panel Thickness (in.)	Panel Applied Direct to Framing Nail Spacing at Panel Edges (in.)				Nail Size (Common or Hot-Dipped Galvanized Box)	Panel Applied Over 1/2 in. or 5/8 in. Gypsum Sheathing Nail Spacing at Panel Edges (in.)			
				6	4	3	2[d]		6	4	3	2[d]
Structural I	6d	1-1/4	3/8	0.26	0.39	0.51	0.66	8d	0.26	0.39	0.51	0.66
	8d	1-3/8	3/8	0.30[f]	0.47[f]	0.60[f]	0.79[f]	10d[e]	0.30[f]	0.47[f]	0.60[f]	0.79[f]
	8d	1-3/8	7/16	0.33[f]	0.51[f]	0.66[f]	0.87[f]	10d[e]	0.33[f]	0.51[f]	0.66[f]	0.87[f]
	8d	1-3/8	15/32	0.36	0.56	0.72	0.95	10d[e]	0.36[f]	0.56[f]	0.72[f]	0.95[f]
	10d[e]	1-1/2	15/32	0.44	0.66	0.86	1.13		-	-	-	-
	14 ga staple	2	3/8	0.19	0.29	0.39	0.58		-	-	-	-
	14 ga staple	2	7/16	0.27	0.40	0.53	0.80		-	-	-	-
Sheathing, Panel Siding and Other Grades Covered in References 9.10 and 9.11	6d	1-1/4	3/8	0.26	0.39	0.51	0.66	8d	0.26	0.39	0.51	0.66
	8d	1-3/8	3/8	0.29[f]	0.42[f]	0.53[f]	0.69[f]	10d[e]	0.29[f]	0.42[f]	0.53[f]	0.69[f]
	8d	1-3/8	7/16	0.31[f]	0.46[f]	0.59[f]	0.76[f]	10d[e]	0.31[f]	0.46[f]	0.59[f]	0.76[f]
	8d	1-3/8	15/32	0.34	0.49	0.64	0.83	10d[e]	0.34[f]	0.49[f]	0.64[f]	0.83[f]
	10d[e]	1-1/2	15/32	0.40	0.60	0.78	1.00		-	-	-	-
	10d[e]	1-1/2	19/32	0.44	0.66	0.86	1.13		-	-	-	-
	14 ga staple	2	3/8	0.17	0.25	0.33	0.50		-	-	-	-
	14 ga staple	2	7/16	0.23	0.36	0.47	0.70		-	-	-	-
	14 ga staple	2	15/32	0.27	0.40	0.53	0.80		-	-	-	-
	(Hot- Dipped Galvanized Casing Nail)							(Hot-Dipped Galvanized Casing Nail)				
Panel Siding as Covered in Reference 9.10	6d	1-1/4	3/8	0.18	0.27	0.36	0.47	8d	0.18	0.27	0.36	0.47
	8d	1-3/8	3/8	0.21	0.31	0.40	0.53	10d[e]	0.21	0.31	0.40	0.53

NOTES for TABLE 12.4.3-2a

[a] $\lambda = 1.0 \quad \phi = 0.65$

[b] All panel edges backed with 2-inch nominal or wider framing. Panels installed either horizontally or vertically. Space nails at 6 in. on center along intermediate framing members for 3/8-in. panels installed with strong axis parallel to studs spaced 24 in. on center and 12 in. on center for other conditions and panel thicknesses. Allowable shear values for fasteners in framing members of other species set forth in Table 12A of ASCE 16 shall be calculated for all grades by multiplying the values by the following factors: 0.82 for species with a specific gravity greater than or equal to 0.42 but less than 0.49 ($0.42 \leq G < 0.49$) and 0.65 for species with a specific gravity less than 0.42 ($G < 0.42$). For panel siding using hot-dipped galvanized casing nails, the shear values shall be the values in the table multiplied by the same factors.

[c] Where panels are applied on both faces of a wall and nail spacing is less than 6 inches on center on either side, panel joints shall be offset to fall on different framing members or framing shall be 3-inch nominal or wider and nails on each side of joint shall be staggered.

[d] Framing at adjoining panel edges shall be 3-in. nominal or wider and nails shall be staggered where nails are spaced 2 in. on center.

[e] Framing at adjoining panel edges shall be 3-in. nominal or wider and nails shall be staggered where 10d nails having penetration into framing of more than 1-5/8 in. are spaced 3 in. or less on center.

[f] The values for 3/8-in. and 7/16-in. panels applied directly to framing are permitted to be increased to the values shown for 15/32-in. panels provided studs are spaced a maximum of 16 in. on center or panel is applied with strong axis across studs.

TABLE 12.4.3-2b Factored Shear Resistance in kiloNewtons per Meter (kN/m) for Seismic Forces on Structural Use Panel Shear Walls with Framing Members of Douglas Fir-Larch or Southern Pine[a,b,c]

Panel Grade	Nail Size (Common or Hot-Dipped Galvanized Box)	Minimum Penetration in Framing (mm)	Panel Thickness (mm)	Panel Applied Direct to Framing Nail Spacing at Panel Edges (mm)				Nail Size (Hot-Dipped Common or Galvanized Box)	Panel Applied Over 12.7 mm or 15.9 mm Gypsum Sheathing Nail Spacing at Panel Edges (mm)			
				150	100	75	50		150	100	75	50[d]
Structural I	6d	32	9.5	3.8	5.7	7.4	9.7	8d	3.8	5.7	7.4	9.7
	8d	35	9.5	4.4f	6.8f	8.7f	11.6f	10d[e]	4.4	6.8	8.7	11.6
	8d	35	11	4.8f	7.5f	9.6f	12.7f	10d[e]	4.8	7.5	9.6	12.7
	8d	35	12	5.3	8.2	10.4	13.8	10d[e]	5.3	8.2	10.4	13.8
	10d[e]	38	12	6.5	9.7	12.6	16.5		-	-	-	-
	14 ga staple	50	9.5	2.8	4.3	5.7	8.4		-	-	-	-
	14 ga staple	50	11	3.9	5.8	7.8	11.7		-	-	-	-
Sheathing, Panel Siding and Other Grades Covered in References 9.10 and 9.11	6d	32	10	3.8	5.7	7.4	9.7	8d	3.8	5.7	7.4	9.7
	8d	35	10	4.2f	6.1f	7.8f	10.1f	10d[e]	4.2	6.1	7.8	10.1
	8d	35	11	4.6f	6.6f	8.5f	11.1f	10d[e]	4.6	6.6	8.5	11.1
	8d	35	12	4.9	7.2	9.3	12.1	10d[e]	4.9	7.2	9.3	12.1
	10d[e]	38	12	5.9	8.7	11.4	14.6		-	-	-	-
	10d[e]	38	15	6.5	9.7	12.6	16.5		-	-	-	-
	14 ga staple	50	9.5	2.5	3.7	4.8	7.3		-	-	-	-
	14 ga staple	50	11	3.4	5.2	6.8	10.2		-	-	-	-
	14 ga staple	50	12	3.9	5.8	7.8	11.7		-	-	-	-
Panel Siding as Covered in Reference 9.10	(Hot-Dipped Galvanized Casing Nail)							(Hot-Dipped Galvanized Casing Nail)				
	6d	32	9.5	2.7	4.0	5.2	6.8	8d	2.7	4.0	5.2	6.8
	8d	35	9.5	3.0	4.6	5.9	7.8	10d[e]	3.0	4.6	5.9	7.8

NOTES for TABLE 12.4.3-2b

[a] $\lambda = 1.0$ $\varphi = 0.65$

[b] All panel edges backed with 38 mm nominal or wider framing. Panels installed either horizontally or vertically. Space nails at 150 mm on center along intermediate framing members for 9 mm panels installed with strong axis parallel to studs spaced 610 mm on center and 305 mm on center for other conditions and panel thicknesses. Allowable shear values for fasteners in framing members of other species set forth in Table 12A of ASCE 16 shall be calculated for all grades by multiplying the values by the following factors: 0.82 for species with a specific gravity greater than or equal to 0.42 but less than 0.49 ($0.42 \leq G < 0.49$) and 0.65 for species with a specific gravity less than 0.42 ($G < 0.42$). For panel siding using hot-dipped galvanized casing nails, the shear values shall be the values in the table multiplied by the same factors.

[c] Where panels are applied on both faces of a wall and nail spacing is less than 610 mm on center on either side, panel joints shall be offset to fall on different framing members or framing shall be 64 mm or wider and nails on each side of joint shall be staggered.

[d] Framing at adjoining panel edges shall be 64 mm or wider and nails shall be staggered where nails are spaced 50 mm on center.

[e] Framing at adjoining panel edges shall be 64 mm or wider and nails shall be staggered where 10d nails having penetration into framing of more than 41 mm are spaced 76 mm or less on center.

[f] The values for 9 mm and 11 mm panels applied directly to framing are permitted to be increased to the values shown for 12 mm panels provided studs are spaced a maximum of 406 mm on center or panel is applied with strong axis across studs.

TABLE 12.5.1-1 Conventional Light-Frame Construction Braced Wall Requirements

Seismic Performance Category	Maximum Distance Between Braced Walls	Maximum Number of *Stories Above Grade* Permitted [a]
A[b]	35 ft (10675 mm)	3
B	35 ft (10675 mm)	3
C	25 ft (7625 mm)	2
D and E (Seismic Use Group I)	25 ft (7625 mm)	1 [c]
E (Seismic Use Group II) and F	Conventional construction not permitted; conformance with Sec. 12.3 required.	

[a] A cripple stud wall is considered to be a *story above grade*. Maximum bearing wall height shall not exceed 10 ft (3050 mm)

[b] See exceptions to Sec. 1.2.1.

[c] Detached one- and two-family dwellings are permitted to be two *stories above grade*.

TABLE 12.5.2-1 Conventional Light-Frame Construction Braced Wall Requirements in Minimum Length of Wall Bracing per Each 25 Lineal Feet (7625 mm) of Braced Wall Line[a]

Story Location	Sheathing Type[b]	$0.125 \le S_{DS} < 0.25$	$0.25 \le S_{DS} < 0.375$	$0.375 \le S_{DS} < 0.50$	$0.50 \le S_{DS} < 0.75$	$0.75 \le S_{DS} < 1.0$[e]
Top or only *story above grade*	G-P[d]	8 ft 0 in. (2440 mm)	8 ft 0 in. (2440 mm)	10 ft 8 in. (3250 mm)	14 ft 8 in. (4470 mm)	18 ft 8 in.[c] (5690 mm)
	S-W	4 ft 0 in. (1220 mm)	4 ft 0 in. (1220 mm)	5 ft 4 in. (1625 mm)	8 ft 0 in. (2440 mm)	9 ft 4 in.[c] (2845 mm)
Story below top *story above grade*	G-P[d]	10 ft 8 in (3250 mm)	14 ft 8 in. (4470 mm)	18 ft 8 in.[c] (6590 mm)	NP	NP
	S-W	5 ft 4 in. (1625 mm)	6 ft 8 in. (2030 mm)	10 ft 8 in.[c] (3250 mm)	13 ft 4 in.[c] (4065 mm)	17 ft 4 in.[c] (5280 mm)
Bottom story of 3 *stories above grade*	G-P[d]	14 ft 8 in. (4470 mm)	Conventional construction not permitted; conformance with Sec. 12.3 required.			
	S-W	8 ft 0 in. (2440 mm)				

[a] Minimum length of panel bracing of one face of wall for S-W sheathing or both faces of wall for G-P sheathing; *h/w* ratio shall not exceed 2/1, except *structures* in *Seismic Design Category* B need only meet the requirements of Sec. 602.9 of the CABO Code. For S-W panel bracing of the same material on two faces of the wall, the minimum length is permitted to be one half the tabulated value but the *h/w* ratio shall not exceed 2/1 and design for uplift is required.

[b] G-P = gypsumboard, fiberboard, particleboard, lath and plaster, or gypsum sheathing boards; S-W = structural-use panels and diagonal wood sheathing. NP = not permitted.

[c] Applies to one- and two-family detached dwellings only.

[d] Nailing shall be as follows:
For ½ in. (13 mm) gypsum board, 5d (0.086 in., 2.2 mm diameter) coolers at 7 in. (178 mm) centers;
For e in. (16mm) gypsum board, 6d (0.092 in. (2.3 mm) diameter) at 7 in (178 mm) centers;
For gypsum sheathing board, 1¾ in. long by 7/16 in. (44 by 11 mm) head, diamond point galvanized at 4 in. (100mm) centers;
For gypsum lath, No. 13 gauge (0.092 in., 2.3 mm) by 1 c in. long, 19/64 in. (29 by 7.5 mm) head, plasterboard at 5 in. (125 mm) centers;
For Portland cement plaster, No. 11 gauge (0.120 in., 3 mm) by 1½ in. long, 7/16 in. head (89 by 11 mm) at 6 in. (150 mm) centers;
For fiberboard and particleboard, No. 11 gauge (0.120 in., 3 mm) by 1½ in. (38 mm) long, 7/16 in. (11 mm) head, galvanized at 3 in. (76 mm) centers.
For structural wood sheathing, the minimum nail size and maximum spacing shall be in accordance with the minimum nails size and maximum spacing allowed for each thickness sheathing in Tables 12.4.3-2a and b.

Nailing as specified above shall occur at all panel edges at studs, at top and bottom plates, and, where occurring, at blocking.

[e] Where $S_{DS} > 1.0$, conventional construction is not permitted.

Chapter 13

SEISMICALLY ISOLATED STRUCTURES DESIGN REQUIREMENTS

13.1 GENERAL: Every seismically isolated *structure* and every portion thereof shall be designed and constructed in accordance with the requirements of this section and the applicable requirements of Chapter 1. The lateral-force-resisting system and the *isolation system* shall be designed to resist the deformations and stresses produced by the effects of seismic ground motions as provided in this section.

13.2 CRITERIA SELECTION:

13.2.1 Basis for Design: The procedures and limitations for the design of seismically isolated *structures* shall be determined considering zoning, site characteristics, vertical acceleration, cracked section properties of concrete and masonry members, *Seismic Use Group*, configuration, structural system, and height in accordance with Sec. 5.2 except as noted below.

13.2.2 Stability of the Isolation System: The stability of the vertical load-carrying elements of the *isolation system* shall be verified by analysis and test, as required, for lateral seismic displacement equal to the *total maximum displacement*.

13.2.3 Seismic Use Group: All portions of the *structure*, including the *structure* above the *isolation system*, shall be assigned a *Seismic Use Group* in accordance with the requirements of Sec. 1.3. The Occupancy Importance Factor shall be taken as 1.0 for a seismically isolated structure, regardless of its *Seismic Use Group* categorization. The Component Importance Factor shall be selected in accordance with Sec. 6.1.5.

13.2.4 Configuration Requirements: Each *structure* shall be designated as being regular or irregular on the basis of the structural configuration above the *isolation system* in accordance with the requirements of Sec. 5.2.

13.2.5 Selection of Lateral Response Procedure:

13.2.5.1 General: Any seismically isolated *structure* is permitted to be and certain seismically isolated *structures* defined below shall be designed using the dynamic lateral response procedure of Sec. 13.4.

13.2.5.2 Equivalent Lateral Force Procedure: The equivalent-lateral-response procedure of Sec. 13.3 is permitted to be used for design of a seismically isolated *structure* provided that:

1. The *structure* is located at a site with S_1 less than or equal to 0.60 ;
2. The *structure* is located on a Class A, B, C, or D site;
3. The *structure* above the *isolation interface* is not more than four stories or 65 ft (20 m) in height;
4. The effective period of the isolated *structure*, T_M, is less than or equal to 3.0 sec.

5. The effective period of the isolated *structure*, T_D, is greater than three times the elastic, fixed-*base* period of the *structure* above the *isolation system* as determined by Eq. 5.4.2.1-1 or 5.4.2.1-2;

6. The *structure* above the *isolation system* is of regular configuration; and

7. The *isolation system* meets all of the following criteria:

   a. The effective stiffness of the *isolation system* at the *design displacement* is greater than one third of the effective stiffness at 20 percent of the *design displacement*,

   b. The *isolation system* is capable of producing a restoring force as specified in Sec. 13.6.2.4,

   c. The *isolation system* has force-deflection properties that are independent of the rate of loading,

   d. The *isolation system* has force-deflection properties that are independent of vertical load and bilateral load, and

   e. The *isolation system* does not limit maximum capable earthquake displacement to less than S_{M1}/S_{D1} times the *total design displacement*.

13.2.5.3 Dynamic Analysis: A dynamic analysis is permitted to be used for the design of any *structure* but shall be used for the design of all isolated *structures* not satisfying Sec. 13.2.5.2. The dynamic lateral response procedure of Sec. 13.4 shall be used for design of seismically isolated *structures* as specified below.

13.2.5.3.1 Response-Spectrum Analysis: Response-spectrum analysis is permitted to be used for design of a seismically isolated *structure* provided that:

1. The *structure* is located on a Class A, B, C, or D site and

2. The *isolation system* meets the criteria of Item 7 of Sec. 13.2.5.2.

13.2.5.3.2 Time-History Analysis: Time-history analysis is permitted to be used for design of any seismically isolated *structure* and shall be used for design of all seismically isolated *structures* not meeting the criteria of Sec. 13.2.5.3.1.

13.2.5.3.3 Site-Specific Design Spectra: Site-specific ground-motion spectra of the *design earthquake* and the *maximum considered earthquake* developed in accordance with Sec. 13.4.4.1 shall be used for design and analysis of all seismically isolated *structures* if any one of the following conditions apply:

1. The *structure* is located on a Class F site or

2. The *structure* is located at a site with S_1 greater than 0.60 .

13.3 EQUIVALENT LATERAL FORCE PROCEDURE:

13.3.1 General: Except as provided in Sec. 13.4, every seismically isolated *structure* or portion thereof shall be designed and constructed to resist minimum earthquake displacements and forces as specified by this section and the applicable requirements of Sec. 5.4.

13.3.2 Deformation Characteristics of the Isolation System: Minimum lateral earthquake *design displacement* and forces on seismically isolated *structures* shall be based on the deformation characteristics of the *isolation system*. The deformation characteristics of the *isolation system* shall explicitly include the effects of the wind-restraint system if such a system is used to meet the design requirements of these *Provisions*. The deformation characteristics of the *isolation system* shall be based on properly substantiated tests performed in accordance with Sec. 13.9.

13.3.3 Minimum Lateral Displacements:

13.3.3.1 Design Displacement: The *isolation system* shall be designed and constructed to withstand minimum lateral earthquake displacements that act in the direction of each of the main horizontal axes of the *structure* in accordance with the following:

$$D_D = \left(\frac{g}{4\pi^2}\right)\frac{S_{D1}T_D}{B_D} \qquad (13.3.3.1)$$

where:

g = acceleration of gravity. The units of the acceleration of gravity, g, are in./sec^2 (mm/sec^2) if the units of the *design displacement*, D_D, are inches (mm);

S_{D1} = design 5 percent damped spectral acceleration at 1 sec period as determined in Sec. 4.1.1;

T_D = effective period, in seconds (sec), of seismically isolated *structure* at the *design displacement* in the direction under consideration, as prescribed by Eq. 13.3.3.2; and

B_D = numerical coefficient related to the *effective damping* of the *isolation system* at the design displacement, β_D, as set forth in Table 13.3.3.1.

TABLE 13.3.3.1 Damping Coefficient, B_D or B_M

Effective Damping, β_D or β_M (Percentage of Critical)[a,b]	B_D or B_M Factor
≤ 2%	0.8
5%	1.0
10%	1.2
20%	1.5
30%	1.7
40%	1.9
≥ 50%	2.0

NOTES for Table 13.3.3.1

[a] The damping coefficient shall be based on the *effective damping* of the *isolation system* determined in accordance with the requirements of Sec. 13.9.5.2.

[b] The damping coefficient shall be based on linear interpolation for *effective damping* values other than those given.

13.3.3.2 Effective Period: The effective period of the isolated *structure*, T_D, shall be determined using the deformational characteristics of the *isolation system* in accordance with the following equation:

$$T_D = 2\pi\sqrt{\frac{W}{k_{D\min}g}} \qquad (13.3.3.2)$$

where:

W = total seismic *dead load* weight of the *structure* above the *isolation interface* as defined in Sec. 5.4.1 and 5.5.3 (kip or kN);

k_{Dmin} = minimum effective stiffness, in kips/inch (kN/mm), of the *isolation system* at the *design displacement* in the horizontal direction under consideration as prescribed by Eq. 13.9.5.1-2; and

g = acceleration of gravity. The units of the acceleration of gravity, g, are in./sec^2 (mm/sec^2) if the units of the *design displacement*, D_D, are inches (mm).

13.3.3.3 Maximum Displacement: The maximum displacement of the *isolation system*, D_M, in the most critical direction of horizontal response shall be calculated in accordance with the formula:

$$D_M = \frac{\left(\frac{g}{4\pi^2}\right) S_{M1} T_M}{B} \qquad (13.3.3.3)$$

where:

g = acceleration of gravity. The units of the acceleration of gravity, g, are in./sec^2 (mm/sec^2) if the units of the *design displacement*, D_D, are inches (mm);

S_{M1} = maximum considered 5 percent damped spectral acceleration at 1 sec period as determined in Sec. 4.1.1;

T_M = effective period, in seconds (sec), of seismic-isolated *structure* at the maximum displacement in the direction under consideration as prescribed by Eq. 13.3.3.4; and

B_M = numerical coefficient related to the *effective damping* of the *isolation system* at the maximum displacement, β_D, as set forth in Table 13.3.3.1.

13.3.3.4 Effective Period at Maximum Displacement: The effective period of the isolated *structure* at maximum displacement, T_M, shall be determined using the deformational characteristics of the *isolation system* in accordance with the equation:

$$T_M = 2\pi\sqrt{\frac{W}{k_{Mmin}g}} \qquad (13.3.3.4)$$

where:

W = total seismic *dead load* weight of the *structure* above the *isolation interface* as defined in Sec. 5.3.2 and 5.5.3 (kip or kN);

k_{Mmin} = minimum effective stiffness, in kips/inch (kN/mm), of the *isolation system* at the maximum displacement in the horizontal direction under consideration as prescribed by Eq. 13.9.5.1-4; and

g = the acceleration due to gravity. The units of the acceleration of gravity, g, are in./sec^2 (mm/sec^2) if the units of the *design displacement*, D_D, are inches (mm).

13.3.3.5 Total Displacement: The *total design displacement*, D_{TD}, and the *total maximum displacement*, D_{TM}, of elements of the *isolation system* shall include additional displacement due to actual and accidental torsion calculated considering the spatial distribution of the lateral stiffness of the *isolation system* and the most disadvantageous location of mass eccentricity.

The *total design displacement*, D_{TD}, and the *total maximum displacement*, D_{TM}, of elements of an *isolation system* with uniform spatial distribution of lateral stiffness shall not be taken as less than that prescribed by the following equations:

$$D_{TD} = D_D\left[1 + y\left(\frac{12e}{b^2 + d^2}\right)\right] \qquad (13.3.3.5\text{-}1)$$

$$D_{TM} = D_M\left[1 + y\left(\frac{12e}{b^2 + d^2}\right)\right] \qquad (13.3.3.5\text{-}2)$$

where:

D_D = *design displacement*, in inches (mm), at the center of rigidity of the *isolation system* in the direction under consideration as prescribed by Eq. 13.3.3.1;

D_M = maximum displacement, in inches (mm), at the center of rigidity of the *isolation system* in the direction under consideration as prescribed in Eq. 13.3.3.3;

y = the distance, in feet (mm), between the center of rigidity of the *isolation system* rigidity and the element of interest measured perpendicular to the direction of seismic loading under consideration;

e = the actual eccentricity, in feet (mm), measured in plan between the center of mass of the *structure* above the *isolation interface* and the center of rigidity of the *isolation system*, plus accidental eccentricity, in feet (mm), taken as 5 percent of the longest plan dimension of the *structure* perpendicular to the direction of force under consideration,

b = the shortest plan dimension of the *structure*, in feet (mm), measured perpendicular to d, and

d = the longest plan dimension of the *structure*, in feet (mm).

The *total design displacement*, D_{TD}, and the *total maximum displacement*, D_{TM}, is permitted to be taken as less than the value prescribed by Eq. 13.3.3.5-1 and Eq. 13.3.3.5-2, respectively, but not less than 1.1 times D_D and D_M, respectively, provided the *isolation system* is shown by calculation to be configured to resist torsion accordingly.

13.3.4 Minimum Lateral Forces:

13.3.4.1 Isolation System and Structural Elements At or Below the Isolation System: The *isolation system*, the foundation, and all structural elements below the *isolation system* shall be designed and constructed to withstand a minimum lateral seismic force, V_b, using all of the appropriate provisions for a nonisolated *structure* where:

$$V_b = k_{Dmax} D_D \qquad (13.3.4.1)$$

where:

k_{Dmax} = maximum effective stiffness, in kips/inch (kN/mm), of the *isolation system* at the *design displacement* in the horizontal direction under consideration as prescribed by Eq. 13.9.5.1-1, and

D_D = *design displacement*, in inches (mm), at the center of rigidity of the *isolation system* in the direction under consideration as prescribed by Eq. 13.3.3.1.

In all cases, V_b shall not be taken as less than the maximum force in the *isolation system* at any displacement up to and including the *design displacement*.

13.3.4.2 Structural Elements Above the Isolation System: The *structure* above the *isolation system* shall be designed and constructed to withstand a minimum shear force, V_s, using all of the appropriate provisions for a nonisolated *structure* where:

$$V_s = \frac{k_{Dmax} D_D}{R_I} \tag{13.3.4.2}$$

where:

k_{Dmax} = maximum effective stiffness, in kips/inch (kN/mm), of the *isolation system* at the *design displacement* in the horizontal direction under consideration as prescribed by Eq. 13.9.5.1-1;

D_D = *design displacement*, in inches (mm), at the center of rigidity of the *isolation system* in the direction under consideration as prescribed by Eq. 13.3.3.1; and

R_I = numerical coefficient related to the type of *lateral-force-resisting system* above the *isolation system*.

The R_I factor shall be based on the type of *lateral-force-resisting system* used for the *structure* above the *isolation system* and shall be 3/8 of the R value given in Table 5.2.2 with an upper bound value not to exceed 2.0 and a lower bound value not to be less than 1.0.

13.3.4.3 Limits on V_s: The value of V_s shall be taken as not less than the following:

1. The lateral seismic force required by Sec. 5.3 for a fixed-*base structure* of the same weight, W, and a period equal to the isolated period, T_D;
2. The *base shear* corresponding to the factored design wind load; and
3. The lateral seismic force required to fully activate the *isolation system* (e.g., the yield level of a softening system, the ultimate capacity of a sacrificial wind-restraint system, or the break-away friction level of a sliding system) factored by 1.5.

13.3.5 Vertical Distribution of Force: The total force shall be distributed over the height of the *structure* above the *isolation interface* in accordance with the following equation:

$$F_x = \frac{V_s w_x h_x}{\sum_{i=1}^{n} w_i h_i} \tag{13.3.5}$$

where:

V_s = total lateral seismic design force or shear on elements above the *isolation system* as prescribed by Eq. 13.3.4.2;

W_x = portion of W that is located at or assigned to Level x;.

h_x = height above the *base* Level x;

w_i = portion of W that is located at or assigned to Level I , respectively; and

h_i = height above the *base* Level I .

At each level designated as x, the force, F_x, shall be applied over the area of the *structure* in accordance with the mass distribution at the level. Stresses in each structural element shall be calculated as the effect of force, F_x, applied at the appropriate levels above the *base*.

13.3.6 Drift Limits: The maximum interstory drift of the *structure* above the *isolation system* shall not exceed $0.015h_{sx}$. The drift shall be calculated by Eq. 5.4.6-1 with the C_d factor of the isolated *structure* equal to the R_I factor defined in Sec. 13.3.4.2.

13.4 DYNAMIC LATERAL RESPONSE PROCEDURE:

13.4.1 General: As required by Sec. 13.2, every seismically isolated *structure* or portion thereof shall be designed and constructed to resist earthquake displacements and forces as specified in this section and the applicable requirements of Sec. 5.5.

13.4.2 Isolation System and Structural Elements Below the Isolation System: The *total design displacement* of the *isolation system* shall be taken as not less than 90 percent of D_{TD} as specified by Sec. 13.3.3.5.

The *total maximum displacement* of the *isolation system* shall be taken as not less than 80 percent of D_{TM} as specified by Sec. 13.3.3.5 .

The design lateral shear force on the *isolation system* and structural elements below the *isolation system* shall be taken as not less than 90 percent of V_b as prescribed by Eq. 13.3.4.1.

The limits of the first and second paragraphs of Sec. 13.4.2 shall be evaluated using values of D_{TD} and D_{TM} determined in accordance with Sec. 13.3.3 except that $D_D^{/}$ is permitted to be used in lieu of D_D and $D_M^{/}$ is permitted to be used in lieu of D_M where $D_D^{/}$ and D'_M are prescribed by the following equations:

$$D_D^{/} = \frac{D_D}{\sqrt{1 + \left(\frac{T}{T_D}\right)^2}} \qquad (13.4.2\text{-}1)$$

$$D_M^{/} = \frac{D_M}{\sqrt{1 + \left(\frac{T}{T_M}\right)^2}} \qquad (13.4.2\text{-}2)$$

where:

D_D = *design displacement*, in inches (mm), at the center of rigidity of the *isolation system* in the direction under consideration as prescribed by Eq. 13.3.3.1;

D_M = maximum displacement in inches (mm), at the center of rigidity of the *isolation system* in the direction under consideration as prescribed by Eq. 13.3.3.3;

T = elastic, fixed-*base* period of the *structure* above the *isolation system* as determined by Sec. 5.3.3;

T_D = effective period, in seconds (sec), of the seismically isolated *structure* at the *design displacement* in the direction under consideration as prescribed by Eq. 13.3.3.2; and

T_M = effective period, in seconds (sec), of the seismically isolated *structure* at the maximum displacement in the direction under consideration as prescribed by Eq. 13.3.3.4.

13.4.3 Structural Elements Above the Isolation System: The design lateral shear force on the *structure* above the *isolation system*, if regular in configuration, shall be taken as not less than 80 percent of V_s, as prescribed by Eq. 13.3.4.2 and the limits specified by Sec. 13.3.4.3.

> **Exception:** The design lateral shear force on the *structure* above the *isolation system*, if regular in configuration, is permitted to be taken as less than 80 percent, but not less than 60 percent of V_s, provided time-history analysis is used for design of the *structure*.

The design lateral shear force on the *structure* above the *isolation system*, if irregular in configuration, shall be taken as not less than V_s, as prescribed by Eq. 13.3.4.2 and the limits specified by Sec. 13.3.4.3.

> **Exception:** The design lateral shear force on the *structure* above the *isolation system*, if irregular in configuration, is permitted to be taken as less than 100 percent, but not less than 80 percent of V_s, provided time-history analysis is used for design of the *structure*.

13.4.4 Ground Motion:

13.4.4.1 Design Spectra: Properly substantiated site-specific spectra are required for the design of all *structures* located on a Class F site or located at a site with S_1 greater than 0.60 . *Structures* that do not require site-specific spectra and for which site specific spectra have not been calculated shall be designed using the response spectrum shape given in Figure 4.1.2.6.

A design spectrum shall be constructed for the *design earthquake*. This design spectrum shall be taken as not less than the *design earthquake* response spectrum given in Figure 4.1.2.6.

> **Exception:** If a site-specific spectrum is calculated for the *design earthquake*, the design spectrum is permitted to be taken as less than 100 percent but not less than 80 percent of the *design earthquake* response spectrum given in Figure 4.1.2.6.

A design spectrum shall be constructed for the *maximum considered earthquake*. This design spectrum shall be taken as not less than 1.5 times the *design earthquake* response spectrum given in Figure 4.1.2.6. This design spectrum shall be used to determine the *total maximum displacement* and overturning forces for design and testing of the *isolation system*.

Exception: If a site-specific spectrum is calculated for the *maximum considered earthquake*, the design spectrum is permitted to be taken as less than 100 percent but not less than 80 percent of 1.5 times the *design earthquake* response spectrum given in Figure 4.1.2.6.

13.4.4.2 Time Histories: Pairs of appropriate horizontal ground motion time history *components* shall be selected and scaled from not less than three recorded events. Appropriate time histories shall be based on recorded events with magnitudes, fault distances and source mechanisms that are consistent with those that control the *design earthquake* (or *maximum considered earthquake*). Where three appropriate recorded ground motion time history pairs are not available, appropriate simulated ground motion time history pairs are permitted to be used to make up the total number required. For each pair of horizontal ground-motion *components*, the square root sum of the squares of the 5 percent damped spectrum of the scaled, horizontal *components* shall be constructed. The motions shall be scaled such that the average value of the square-root-sum-of-the-squares spectra does not fall below 1.3 times the 5 percent damped spectrum of the *design earthquake* (or *maximum considered earthquake*) by more than 10 percent for periods from $0.5T_D$ seconds to $1.25T_M$ seconds.

13.4.5 Mathematical Model:

13.4.5.1 General: The mathematical models of the isolated *structure* including the *isolation system*, the *lateral-force-resisting system*, and other structural elements shall conform to Sec. 5.5.2 and to the requirements of Sec. 13.4.5.2 and 13.4.5.3, below.

13.4.5.2 Isolation System: The *isolation system* shall be modeled using deformational characteristics developed and verified by test in accordance with the requirements of Sec. 13.3.2. The *isolation system* shall be modeled with sufficient detail to:

1. Account for the spatial distribution of *isolator units*;
2. Calculate translation, in both horizontal directions, and torsion of the *structure* above the *isolation interface* considering the most disadvantageous location of mass eccentricity;
3. Assess overturning/uplift forces on individual *isolator units*; and
4. Account for the effects of vertical load, bilateral load, and/or the rate of loading if the force deflection properties of the *isolation system* are dependent on one or more of these attributes.

13.4.5.3 Isolated Building:

13.4.5.3.1 Displacement: The maximum displacement of each floor and the *total design displacement* and *total maximum displacement* across the *isolation system* shall be calculated using a model of the isolated *structure* that incorporates the force-deflection characteristics of nonlinear elements of the *isolation system* and the *lateral-force-resisting system*.

Lateral-force-resisting systems with nonlinear elements include, but are not limited to, irregular structural systems designed for a lateral force less than 100 percent and regular structural systems designed for a lateral force less than 80 percent of V_s as prescribed by Eq. 13.3.4.2 and the limits specified by Sec. 13.3.4.3.

13.4.5.3.2 Forces and Displacements in Elements of the Lateral-Force-Resisting System: Design forces and displacements in elements of the *lateral-force-resisting system* are permitted to be calculated using a linear elastic model of the isolated *structure* provided that:

1. Stiffness properties assumed for nonlinear isolation-system *components* are based on the maximum effective stiffness of the *isolation system* and
2. No elements of the *lateral-force-resisting system* of the *structure* above the *isolation system* are nonlinear.

13.4.6 Description of Analysis Procedures:

13.4.6.1 General: Response-spectrum and time-history analyses shall be performed in accordance with Sec. 5.4 and the requirements of this section.

13.4.6.2 Input Earthquake: The *design earthquake* shall be used to calculate the *total design displacement* of the *isolation system* and the lateral forces and displacements of the isolated *structure*. The *maximum considered earthquake* shall be used to calculate the *total maximum displacement* of the *isolation system*.

13.4.6.3 Response-Spectrum Analysis: Response-spectrum analysis shall be performed using a modal damping value for the fundamental mode in the direction of interest not greater than the *effective damping* of the *isolation system* or 30 percent of critical, whichever is less. Modal damping values for higher modes shall be selected consistent with those appropriate for response spectrum analysis of the *structure* above the *isolation system* with a fixed *base*.

Response-spectrum analysis used to determine the *total design displacement* and the *total maximum displacement* shall include simultaneous excitation of the model by 100 percent of the most critical direction of ground motion and 30 percent of the ground motion on the orthogonal axis. The maximum displacement of the *isolation system* shall be calculated as the vectorial sum of the two orthogonal displacements.

The design shear at any *story* shall not be less than the *story* shear obtained using Eq. 13.3.5 and a value of V_s taken as that equal to the *base shear* obtained from the response-spectrum analysis in the direction of interest.

13.4.6.4 Time-History Analysis: Time-history analysis shall be performed with at least three appropriate pairs of horizontal time-history *components* as defined in Sec. 13.4.4.2.

Each pair of time histories shall be applied simultaneously to the model considering the most disadvantageous location of mass eccentricity. The maximum displacement of the *isolation system* shall be calculated from the vectorial sum of the two orthogonal *components* at each time step.

The parameter of interest shall be calculated for each time-history analysis. If three time-history analyses are performed, the maximum response of the parameter of interest shall be used for design. If seven or more time-history analyses are performed, the average value of the response parameter of interest shall be used for design.

13.4.7 Design Lateral Force:

13.4.7.1 Isolation System and Structural Elements At or Below the Isolation System: The *isolation system*, foundation, and all structural elements below the *isolation system* shall be designed using all of the appropriate requirements for a nonisolated *structure* and the forces obtained from the dynamic analysis without reduction.

13.4.7.2 Structural Elements Above the Isolation System: Structural elements above the *isolation system* shall be designed using the appropriate provisions for a nonisolated *structure* and the forces obtained from the dynamic analysis divided by a factor of R_I. The R_I factor shall be based on the type of *lateral-force-resisting system* used for the *structure* above the *isolation system*.

13.4.7.3 Scaling of Results: When the factored lateral shear force on structural elements, determined using either response spectrum or time-history analysis, is less than the minimum level prescribed by Sec. 13.4.2 and 13.4.3, all response parameters, including member forces and moments, shall be adjusted proportionally upward.

13.4.7.4 Drift Limits: Maximum interstory drift corresponding to the design lateral force including displacement due to vertical deformation of the *isolation system* shall not exceed the following limits:

1. The maximum interstory drift of the *structure* above the *isolation system* calculated by response spectrum analysis shall not exceed $0.015h_{sx}$ and
2. The maximum interstory drift of the *structure* above the *isolation system* calculated by time-history analysis considering the force-deflection characteristics of nonlinear elements of the *lateral-force-resisting system* shall not exceed $0.020h_{sx}$.

Drift shall be calculated using Eq. 5.3.8.1 with the C_d factor of the isolated *structure* equal to the R_I factor defined in Sec. 13.3.4.2.

The secondary effects of the *maximum considered earthquake* lateral displacement Δ of the *structure* above the *isolation system* combined with gravity forces shall be investigated if the inter story drift ratio exceeds $0.010/R_I$.

13.5 LATERAL LOAD ON ELEMENTS OF STRUCTURES AND NONSTRUCTURAL COMPONENTS SUPPORTED BY BUILDINGS:

13.5.1 General: Parts or portions of an isolated *structure*, permanent nonstructural *components* and the attachments to them, and the attachments for permanent equipment supported by a *structure* shall be designed to resist *seismic forces* and displacements as prescribed by this section and the applicable requirements of Chapter 6.

13.5.2 Forces and Displacements:

13.5.2.1 Components At or Above the Isolation Interface: Elements of seismically isolated *structures* and nonstructural *components*, or portions thereof, that are at or above the *isolation interface* shall be designed to resist a total lateral seismic force equal to the maximum dynamic response of the element or *component* under consideration.

Exception: Elements of seismically isolated *structures* and nonstructural *components* or portions thereof are permitted to be designed to resist total lateral seismic force as prescribed in Sec. 5.2.6 and 6.1.3 as appropriate.

13.5.2.2 Components Crossing the Isolation Interface: Elements of seismically isolated *structures* and nonstructural *components*, or portions thereof, that cross the *isolation interface* shall be designed to withstand the *total maximum displacement*.

13.5.2.3 Components Below the Isolation Interface: Elements of seismically isolated *structures* and nonstructural *components*, or portions thereof, that are below the *isolation interface* shall be designed and constructed in accordance with the requirements of Sec. 5.2.

13.6 DETAILED SYSTEM REQUIREMENTS:

13.6.1 General: The *isolation system* and the structural system shall comply with the material requirements of these *Provisions*. In addition, the *isolation system* shall comply with the detailed system requirements of this section and the structural system shall comply with the detailed system requirements of this section and the applicable portions of Sec. 5.2.

13.6.2 Isolation System:

13.6.2.1 Environmental Conditions: In addition to the requirements for vertical and lateral loads induced by wind and earthquake, the *isolation system* shall be designed with consideration given to other environmental conditions including aging effects, creep, fatigue, operating temperature, and exposure to moisture or damaging substances.

13.6.2.2 Wind Forces: Isolated *structures* shall resist design wind loads at all levels above the *isolation interface*. At the *isolation interface*, a wind restraint system shall be provided to limit lateral displacement in the *isolation system* to a value equal to that required between floors of the *structure* above the *isolation interface*.

13.6.2.3 Fire Resistance: Fire resistance rating for the *isolation system* shall be consistent with the requirements of columns, *walls*, or other such elements in the same area of the *structure*.

13.6.2.4 Lateral-Restoring Force: The *isolation system* shall be configured to produce a restoring force such that the lateral force at the *total design displacement* is at least $0.025W$ greater than the lateral force at 50 percent of the *total design displacement*.

Exception: The *isolation system* need not be configured to produce a restoring force, as required above, provided the *isolation system* is capable of remaining stable under full vertical load and accommodating a *total maximum displacement* equal to the greater of either 3.0 times the *total design displacement* or $36S_{M1}$ in. (or 915 S_{M1} mm).

13.6.2.5 Displacement Restraint: The *isolation system* is permitted to be configured to include a displacement restraint that limits lateral displacement due to the *maximum considered earthquake* to less than S_{M1}/S_{D1} times the *total design displacement* provided that the seismically isolated *structure* is designed in accordance with the following criteria when more stringent than the requirements of Sec. 13.2:

1. *Maximum considered earthquake* response is calculated in accordance with the dynamic analysis requirements of Sec. 13.4 explicitly considering the nonlinear characteristics of the *isolation system* and the *structure* above the *isolation system*.
2. The ultimate capacity of the *isolation system* and structural elements below the *isolation system* shall exceed the strength and displacement demands of the *maximum considered earthquake*.
3. The *structure* above the *isolation system* is checked for stability and ductility demand of the *maximum considered earthquake*, and
4. The displacement restraint does not become effective at a displacement less than 0.75 times the *total design displacement* unless it is demonstrated by analysis that earlier engagement does not result in unsatisfactory performance.

13.6.2.6 Vertical-Load Stability: Each element of the *isolation system* shall be designed to be stable under the maximum vertical load ($1.2D + 1.0L + |E|$) and the minimum vertical load ($0.8D - |E|$) at a horizontal displacement equal to the *total maximum displacement*. The *dead load*, D, and the *live load*, L, are specified in Sec. 5.2.7. The seismic load, E, is given by Eq. 5.2.7-1 and 5.2.7-2 where S_{DS} in these equations is replaced by S_{MS} and the vertical load due to earthquake, Q_E, shall be based on peak response due to the *maximum considered earthquake*.

13.6.2.7 Overturning: The factor of safety against global structural overturning at the *isolation interface* shall not be less than 1.0 for required load combinations. All gravity and seismic loading conditions shall be investigated. *Seismic forces* for overturning calculations shall be based on the *maximum considered earthquake* and W shall be used for the vertical restoring force.

Local uplift of individual elements is permitted provided the resulting deflections do not cause overstress or instability of the *isolator units* or other *structure* elements.

13.6.2.8 Inspection and Replacement:

1. Access for inspection and replacement of all *components* of the *isolation system* shall be provided.
2. A *registered design professional* shall complete a final series of inspections or observations of *structure* separation areas and *components* that cross the *isolation interface* prior to the issuance of the certificate of occupancy for the seismically isolated *structure*. Such inspections and observations shall indicate that the conditions allow free and unhindered displacement of the *structure* to maximum design levels and that all *components* that cross the *isolation interface* as installed are able to accommodate the stipulated displacements.
3. Seismically isolated *structures* shall have a periodic monitoring, inspection and maintenance program for the *isolation system* established by the *registered design professional* responsible for the design of the system.
4. Remodeling, repair or retrofitting at the *isolation system* interface, including that of *components* that cross the *isolation interface*, shall be performed under the direction of a *registered design professional*.

13.6.2.9 Quality Control: A quality control testing program for *isolator units* shall be established by the *registered design professional* responsible for the structural design in accordance with Sec. 3.2.1.

13.6.3 Structural System:

13.6.3.1 Horizontal Distribution of Force: A horizontal diaphragm or other structural elements shall provide continuity above the *isolation interface* and shall have adequate strength and ductility to transmit forces (due to nonuniform ground motion) from one part of the *structure* to another.

13.6.3.2 Building Separations: Minimum separations between the isolated *structure* and surrounding retaining *walls* or other fixed obstructions shall not be less than the *total maximum displacement*.

13.6.3.3 Nonbuilding Structures: These shall be designed and constructed in accordance with the requirements of Chapter 14 using *design displacement*s and forces calculated in accordance with Sec. 13.3 or 13.4.

13.7 FOUNDATIONS: Foundations shall be designed and constructed in accordance with the requirements of Chapter 7 using design forces calculated in accordance with Sec. 13.3 or 13.4, as appropriate.

13.8 DESIGN AND CONSTRUCTION REVIEW:

13.8.1 General: A design review of the *isolation system* and related test programs shall be performed by an independent team of *registered design professionals* in the appropriate disciplines and others experienced in seismic analysis methods and the theory and application of seismic isolation.

13.8.2 Isolation System: *Isolation system* design review shall include, but not be limited to, the following:

1. Review of site-specific seismic criteria including the development of site-specific spectra and ground motion time histories and all other design criteria developed specifically for the project;
2. Review of the preliminary design including the determination of the *total design displacement* of the *isolation system design displacement* and the lateral force design level;
3. Overview and observation of prototype testing (Sec. 13.9);
4. Review of the final design of the entire structural system and all supporting analyses; and
5. Review of the *isolation system* quality control testing program (Sec. 13.6.2.9).

13.9 REQUIRED TESTS OF THE ISOLATION SYSTEM:

13.9.1 General: The deformation characteristics and damping values of the *isolation system* used in the design and analysis of seismically isolated *structures* shall be based on tests of a selected sample of the *components* prior to construction as described in this section.

The *isolation system components* to be tested shall include the wind-restraint system if such a system is used in the design.

The tests specified in this section are for establishing and validating the design properties of the *isolation system* and shall not be considered as satisfying the manufacturing quality control tests of Sec. 13.6.2.9.

13.9.2 Prototype Tests:

13.9.2.1 General: Prototype tests shall be performed separately on two full-size specimens (or sets of specimens, as appropriate) of each predominant type and size of *isolator unit* of the *isolation system*. The test specimens shall include the wind restraint system as well as individual *isolator units* if such systems are used in the design. Specimens tested shall not be used for construction unless accepted by the registered design professional.

13.9.2.2 Record: For each cycle of tests, the force-deflection behavior of the test specimen shall be recorded.

13.9.2.3 Sequence and Cycles: The following sequence of tests shall be performed for the prescribed number of cycles at a vertical load equal to the average *dead load* plus one-half the effects due to *live load* on all *isolator units* of a common type and size:

1. Twenty fully reversed cycles of loading at a lateral force corresponding to the wind design force;
2. Three fully reversed cycles of loading at each of the following increments of the *total design displacement* -- $0.25D_D$, $0.5D_D$, $1.0D_D$, and $1.0D_M$;
3. Three fully reversed cycles of loading at the *total maximum displacement*, $1.0D_{TM}$; and
4. $30S_{D1}B_D/S_{DS}$, but not less than ten, fully reversed cycles of loading at 1 *total design displacement*, $1.0D_{TD}$.

If an *isolator unit* is also a vertical-load-carrying element, then Item 2 of the sequence of cyclic tests specified above shall be performed for two additional vertical load cases: $1.1.2D + 0.5L + |E|$ and $2.0.8D - |E|$ where *dead load*, D, and *live load*, L, are specified in Sec. 5.2.7. The seismic load, E, is given by Eq. 5.2.7-1 and 5.2.7-2 and the load increment due to earthquake overturning, Q_E, shall be equal to or greater than the peak earthquake vertical force response corresponding to the test displacement being evaluated. In these tests, the combined vertical load shall be taken as the typical or average downward force on all *isolator units* of a common type and size.

13.9.2.4 Units Dependent on Loading Rates: If the force-deflection properties of the *isolator units* are dependent on the rate of loading, then each set of tests specified in Sec. 13.9.2.3 shall be performed dynamically at a frequency equal to the inverse of the effective period, T_D.

If reduced-scale prototype specimens are used to quantify rate-dependent properties of isolators, the reduced-scale prototype specimens shall be of the same type and material and be manufactured with the same processes and quality as full-scale prototypes and shall be tested at a frequency that represents full-scale prototype loading rates.

The force-deflection properties of an *isolator unit* shall be considered to be dependent on the rate of loading if there is greater than a plus or minus 15 percent difference in the effective stiffness and the *effective damping* at the *design displacement* when tested at a frequency equal to the inverse of the effective period, T_D, of the isolated *structure* and when tested at any frequency in the range of 0.1 to 2.0 times the inverse of the effective period, T_D, of the isolated *structure*.

13.9.2.5 Units Dependent on Bilateral Load: If the force-deflection properties of the *isolator units* are dependent on bilateral load, the tests specified in Sec. 13.9.2.3 and 13.9.2.4 shall be augmented to include bilateral load at the following increments of the *total design displacement*: 0.25 and 1.0, 0.50 and 1.0, 0.75 and 1.0, and 1.0 and 1.0.

> **Exception:** If reduced-scale prototype specimens are used to quantify bilateral-load-dependent properties, then such specimens shall be of the same type and material and manufactured with the same processes and quality as full-scale prototypes.

The force-deflection properties of an *isolator unit* shall be considered to be dependent on bilateral load if the bilateral and unilateral force-deflection properties have greater than a plus or minus 15 percent difference in effective stiffness at the *design displacement*.

13.9.2.6 Maximum and Minimum Vertical Load: *Isolator units* that carry vertical load shall be statically tested for the maximum and minimum vertical load at the *total maximum displacement*. In these tests, the combined vertical load, $1.2D + 1.0L + |E|$, shall be taken as the maximum vertical force, and the combined vertical load, $0.8D - |E|$, shall be taken as the minimum vertical force, on any one isolator of a common type and size. The *dead load*, D, and *live load*, L, are specified in Sec. 5.2.7. The seismic load, E, is given by Eq. 5.2.7-1 and 5.2.7-2, where S_{DS} in these equations is replaced by S_{MS}, and the load increment due to earthquake overturning, Q_E, shall be equal to or greater than the peak earthquake vertical force response corresponding to the *maximum considered earthquake*.

13.9.2.7 Sacrificial-Wind-Restraint Systems: If a sacrificial-wind-restraint system is to be utilized, the ultimate capacity shall be established by test.

13.9.2.8 Testing Similar Units: The prototype tests are not required if an *isolator unit* is of similar dimensional characteristics and of the same type and material as a prototype *isolator unit* that has been previously tested using the specified sequence of tests.

13.9.3 Determination of Force-Deflection Characteristics: The force-deflection characteristics of the *isolation system* shall be based on the cyclic load tests of isolator prototypes specified in Sec. 13.9.2.

As required, the effective stiffness of an *isolator unit*, k_{eff}, shall be calculated for each cycle of

$$k_{eff} = \frac{|F^+| + |F^-|}{|\Delta^+| + |\Delta^-|} \qquad (13.9.3\text{-}1)$$

loading by the equation:

where F^+ and F^- are the positive and negative forces at Δ^+ and Δ^-, respectively.

As required, the *effective damping*, β_{eff}, of an *isolator unit* shall be calculated for each cycle of loading by the equation:

$$\beta_{eff} = \frac{2}{\pi}\left[\frac{E_{loop}}{k_{eff}\left(|\Delta^+| + |\Delta^-|\right)^2}\right] \qquad (13.9.3\text{-}2)$$

where the energy dissipated per cycle of loading, E_{loop}, and the effective stiffness, k_{eff}, shall be based on peak test displacements of Δ^+ and Δ^-.

13.9.4 Test Specimen Adequacy: The performance of the test specimens shall be assessed as adequate if the following conditions are satisfied:

1. The force-deflection plots of all tests specified in Sec. 13.9.2 have a positive incremental force carrying capacity.

   1.1. For each increment of test displacement specified in Item 2 of Sec. 13.9.2.3 and for each vertical load case specified in Sec. 13.9.2.3:

   There is no greater than a plus or minus 15 percent difference between the effective stiffness at each of the three cycles of test and the average value of effective stiffness for each test specimen;

   1.2. For each increment of test displacement specified in Item 2 of Sec. 13.9.2.3 and for each vertical load case specified in Sec. 13.9.2.3;

   There is no greater than a 15 percent difference in the average value of effective stiffness of the two test specimens of a common type and size of the *isolator unit* over the required three cycles of test;

2. For each specimen there is no greater than a plus or minus 20 percent change in the initial effective stiffness of each test specimen over the $30S_{D1}B_D/S_{DS}$, but not less than 10, cycles of test specified in Item 3 of Sec. 13.9.2.3;

3. For each specimen there is no greater than a 20 percent decrease in the initial *effective damping* over for the $30S_{D1}B_D/S_{DS}$, but not less than 10, cycles of test specified in Item 3 of Sec. 13.9.2.3; and

4. All specimens of vertical-load-carrying elements of the *isolation system* remain stable up to the *total maximum displacement* for static load as prescribed in Sec. 13.9.2.6 .

13.9.5 Design Properties of the Isolation System:

13.9.5.1 Maximum and Minimum Effective Stiffness: At the *design displacement*, the maximum and minimum effective stiffness of the isolated system, k_{Dmax} and k_{Dmin}, shall be based on the cyclic tests of Item 2 of Sec. 13.9.2.3 and calculated by the equations:

$$k_{Dmax} = \frac{\Sigma |F_D^+|_{max} + \Sigma |F_D^-|_{max}}{2D_D} \qquad (13.9.5.1\text{-}1)$$

$$k_{Dmin} = \frac{\Sigma |F_D^+|_{min} + \Sigma |F_D^-|_{min}}{2D_D} \qquad (13.9.5.1\text{-}2)$$

At the maximum displacement, the maximum and minimum effective stiffness of the *isolation system*, k_{Mmax} and k_{Mmin}, shall be based on the cyclic tests of Item 2 of Sec. 13.9.3 and calculated by the equations:

$$k_{Mmax} = \frac{\Sigma |F_M^+|_{max} + \Sigma |F_M^-|_{max}}{2D_M} \qquad (13.9.5.1\text{-}3)$$

$$k_{Mmin} = \frac{\Sigma |F_M^+|_{min} + \Sigma |F_M^-|_{min}}{2D_M} \qquad (13.9.5.1\text{-}4)$$

The maximum effective stiffness of the *isolation system*, k_{Dmax} (or k_{Mmax}), shall be based on forces from the cycle of prototype testing at a test displacement equal to D_D (or D_M) that produces the largest value of effective stiffness. Minimum effective stiffness of the *isolation system*, k_{Dmin} (or k_{Mmin}), shall be based on forces from the cycle of prototype testing at a test displacement equal to D_D (or D_M) that produces the smallest value of effective stiffness.

For *isolator units* that are found by the tests of Sec. 13.9.3, 13.9.4 and 13.9.5 to have force-deflection characteristics that vary with vertical load, rate of loading or bilateral load, respectively, the values of k_{Dmax} and k_{Mmax} shall be increased and the values of k_{Dmin} and k_{Mmin} shall be decreased, as necessary, to bound the effects of measured variation in effective stiffness.

13.9.5.2 Effective Damping: At the *design displacement*, the *effective damping* of the *isolation system*, β_D, shall be based on the cyclic tests of Item 2 of Sec. 13.9.3 and calculated by the equation:

$$\beta_D = \frac{1}{2\pi}\left[\frac{\Sigma E_D}{k_{Dmax} D_D^2}\right] \qquad (13.9.5.2\text{-}1)$$

In Eq. 13.9.5.2-1, the total energy dissipated per cycle of *design displacement* response, ΣE_D, shall be taken as the sum of the energy dissipated per cycle in all *isolator units* measured at a test displacement equal to D_D. The total energy dissipated per cycle of *design displacement* response, ΣE_D, shall be based on forces and deflections from the cycle of prototype testing at test displacement D_D that produces the smallest value of *effective damping*.

At the maximum displacement, the *effective damping* of the *isolation system*, β_M, shall be based on the cyclic tests of Item 2 of Sec. 13.9.3 and calculated by the equation:

$$\beta_M = \frac{1}{2\pi}\left[\frac{\Sigma E_M}{k_{Mmax} D_M^2}\right] \qquad (13.9.5.2\text{-}2)$$

In Eq. 13.9.5.2-2, the total energy dissipated per cycle of *design displacement* response, ΣE_M, shall be taken as the sum of the energy dissipated per cycle in all *isolator units* measured at a test displacement equal to D_M. The total energy dissipated per cycle of maximum displacement response, ΣE_M, shall be based on forces and deflections from the cycle of prototype testing at test displacement D_M that produces the smallest value of *effective damping*.

Appendix to Chapter 13

STRUCTURES WITH DAMPING SYSTEMS

PREFACE: Appendix A13 is an entirely new addition to the 2000 *Provisions* and contains design criteria, analysis methods, and testing recommendations that have no or only limited history of use.

The appendix is intended for the trial use by design professionals, code groups, and regulatory agencies. Design (peer) review is recommended for all structures with a damping system and should be considered essential when this appendix is used as a basis for regulating or approving the design of actual construction.

13A.1 GENERAL: Every *structure* with a damping system and every portion thereof shall be designed and constructed in accordance with the requirements of this appendix and the applicable requirements of Chapter 1.

Exception: Motion and accelerations of seismically isolated *structures* which contain *damping devices* across the plane of isolation shall be determined in accordance with the provisions of Chapter 13. Testing and strength requirements of *damping devices* and other elements of the *damping system* shall be determined in accordance with the applicable provisions of this Appendix.

13A.2 CRITERIA SELECTION:

13A.2.1 Basis for Design: The procedure and limitations for the design of *structures* with a *damping system* shall be determined considering zoning, site characteristics, vertical acceleration, cracked section properties of concrete and masonry members, *Seismic Use Group*, configuration, structural system, and height in accordance with Sec. 5.2, except as noted below.

13A.2.2 Seismic Use Group: All portions of the *structure* shall be assigned a *Seismic Use Group* in accordance with the requirements of Sec. 1.3.

13A.2.3 Seismic Design Category: Each *structure* shall be assigned to *a Seismic Design Category* based on the *Seismic Use Group* and the design spectral response acceleration in accordance with Sec. 4.2.

Exception: *Seismic Design Category A structures* with a *damping system* shall be designed using the design spectral response acceleration determined in accordance with Sec. 4.1.2.5 and the analysis methods and design provisions required for *Seismic Design Category B structures.*

13A.2.4 Configuration Requirements: *Structure* design shall consider the combination of forces that occur in the basic *seismic-force-resisting system* and the *damping system*, as defined in the following sections.

13A.2.4.1 Seismic-Force-Resisting System: *Structures* that contain a *damping system* are required to have a basic *seismic-force-resisting system* that, in each lateral direction, shall conform to one of the types indicated in Table 5.2.2.

The design of the *seismic-force-resisting system* in each direction shall comply with the requirements of Sec.13A.7.1 and the following:

1. The materials, detailing, construction and inspection of the *seismic-force-resisting system* shall meet all applicable requirements defined by the *Seismic Design Category*.
2. The lateral stiffness of the *seismic-force-resisting system* used to determine elastic periods and displacements shall include the modeling requirements of Sec. 5.3.7 and 5.4.2.
3. The seismic base shear used for design of the *seismic-force-resisting system* shall not be less than V_{min}, where V_{min} is determined as the greater of the following values:

$$V_{\min} = \frac{V}{B_{V+1}} \qquad \text{(13A.2.4.1-1)}$$

$$V_{min} = 0.75V \qquad \text{(13A.2.4.1-2)}$$

where:

V = total design shear at the *base* of the *structure* in the direction of interest, as determined using the procedure of Sec. 5.4, including Sec.5.4.2 (kip or kN), and

B_{V+I} = numerical coefficient as set forth in Table 13A.3.1 for effective damping equal to the sum of viscous damping in the fundamental mode of vibration of the *structure* in the direction of interest, β_{Vm} (m = 1), plus inherent damping, β_I, and period of *structure* equal to T_1.

Exception: Seismic base shear used for design of the *seismic-force-resisting system* shall not be taken as less than 1.0V, if either of the following conditions apply:

1. In the direction of interest, the *damping system* has less than two *damping devices* on each floor level, configured to resist torsion.
2. The *seismic-force-resisting system* has a vertical irregularity of Type 1b (Table 5.2.3.3) or a plan irregularity of Type 1b (Table 5.2.3.2).

4. Minimum strength requirements for elements of the *seismic-force-resisting-system* that are also elements of the *damping system* or are otherwise required to resist forces from damping devices shall meet the additional requirements of Sec. 13A.7.3.

13A.2.4.2 Damping System: Elements of the *damping system* shall be designed to remain elastic for design loads including unreduced seismic forces of *damping devices* as required in Sec. 13A.7.3, unless it is shown by analysis or test that inelastic response of elements would not

adversely affect *damping system* function and inelastic response is limited in accordance with the requirements of Sec. 13A.7.3.4.

13A.2.5 Seismic Criteria:

13A.2.5.1 Design Spectra: Spectra of the *design earthquake* and the *maximum considered earthquake* developed in accordance with Sec. 13.4.4.1 shall be used for the design and analysis of all *structures* with a *damping system.* Site-specific design spectra shall be developed and used for design of *structures* with a *damping system* if any one of the following conditions apply:

1. The *structure* is located on a Class F site or
2. The *structure* is located at a site with S_1 greater than 0.60.

13A.2.5.2 Time Histories: Ground-motion time histories of the *design earthquake* and the *maximum considered earthquake* developed in accordance with Sec. 13.4.4.2 shall be used for design and analysis of all *structures* with a *damping system* if either of the following conditions apply:

1. The *structure* is located at a site with S_1 greater than 0.60.
2. The *damping system* is explicitly modeled and analyzed using the time history analysis method.

13A.2.6 Selection of Analysis Procedure:

13A.2.6.1 General: A structural analysis shall be made for all *structures* with a *damping system* in accordance with the requirements of this section. The structural analysis shall use linear procedures, nonlinear procedures, or a combination of linear and nonlinear procedures as described below.

The *seismic-force-resisting system* shall be designed using the procedures of either Sec. 13A.2.6.2 or Sec. 13A.2.6.3.

The *damping system* may be designed using the procedures of either Sec. 13A.2.6.2 or 13A.2.6.3, subject to the limitations set forth in these sections. *Damping systems* not meeting these limitations shall be designed using the nonlinear analysis methods as required in Sec. 13A.6.

13A.2.6.2 Equivalent Lateral Force Analysis Procedure: *Structures* with a *damping system* designed using the equivalent lateral force analysis procedure of Sec. 13A.4 shall be subject to the following limitations:

1. In the direction of interest, the *damping system* has at least two *damping devices* in each story, configured to resist torsion.
2. The total effective damping of the fundamental mode, β_{mD} (m = 1), of the *structure* in the direction of interest is not greater than 35 percent of critical.
3. The *seismic-force-resisting system* does not have a vertical irregularity of Type 1a, 1b, 2, or 3 (Table 5.2.3.3) or a plan irregularity of Type 1a or 1b (Table 5.2.3.2).
4. Floor diaphragms are rigid (Sec. 5.2.31).

5. The height of the *structure* above the *base* does not exceed 100 ft (30 m).
6. Peak dynamic response of the *structure* and elements of the *damping system* are confirmed by nonlinear time history analysis, when required by Sec. 13A.2.6.4.3.

13A.2.6.3 Response Spectrum Analysis: *Structures* with a *damping system* meeting the limitations of Sec. 13A.2.6.2 may be designed using the response spectrum analysis procedure of Sec. 13A.5 and *structures* not meeting the limitations of Sec. 13A.2.6.2 shall be designed using the response spectrum analysis procedure of Sec. 13A.5, subject to the following limitations:

1. In the direction of interest, the *damping system* has at least two *damping devices* in each story, configured to resist torsion,
2. The total effective damping of the fundamental mode, β_{mD} (m = 1), of the *structure* in the direction of interest is not greater than 35 percent of critical, and
3. Peak dynamic response of the *structure* and elements of the *damping system* are confirmed by nonlinear time history analysis, when required by Sec. 13A.2.6.4.3.

13A.2.6.4 Nonlinear Analysis:

13A.2.6.4.1 General: Nonlinear analysis procedures of Sec.13A.6 are permitted for design of all *structures* with *damping systems* and shall be used for design of *structures* with *damping systems* not meeting linear analysis criteria of Sec. 13A.2.6.3.

Nonlinear time history analysis shall be used to confirm peak dynamic response of the *structure* and elements of the *damping system* if the *structure* is located at a site with S_1 greater than 0.60g.

The nonlinear force-deflection characteristics of elements of the *seismic-force-resisting system* shall be modeled as required by Sec. 5.7.1 and 5.8.1. The nonlinear force-deflection characteristics of *damping devices* shall be modeled, as required, to explicitly account for device dependence on frequency, amplitude and duration of seismic loading.

13A.2.6.4.2 Nonlinear Static Analysis: *Structures* with a *damping system* designed using the nonlinear static analysis procedure of Sec. 13A.6 shall be subject to the following limitations:

1. Peak dynamic response of the *structure* and elements of the *damping system* is confirmed by nonlinear time history analysis, when required by Sec. 13A.2.6.4.3.

13A.2.6.4.3 Nonlinear Time History Analysis: *Structures* with a *damping system* may be designed using the nonlinear time history analysis procedure of Sec. 13A.6 without limitation.

Nonlinear time history analysis shall be used to confirm peak dynamic response of the *structure* and elements of the *damping system* for *structures* with a *damping system* if the following conditions applies:

1. The *structure* is located at site with S_1 greater than 0.60.

13A.3 DAMPED RESPONSE MODIFICATION:

13A.3.1 General: As required in Sec. 13A.4 and 13A.5, response of the *structure* shall be modified for the effects of the *damping system* using coefficients prescribed in Table 13A.3.1.

Table 13A.3.1 Damping Coefficient, B_{V+I}, B_{1D}, B_R, B_{1M}, B_{mD} or B_{mM}

Effective Damping, β	Period of the *Structure* $\geq T_S/5$
≤ 2%	0.8
5%	1.0
10%	1.2
20%	1.5
30%	1.8
40%	2.1
50%	2.4
60%	2.7
70%	3.0
80%	3.3
90%	3.6
≥ 100%	4.0

1The damping coefficient is equal to 1.0 at *a period* of the *structure* equal to 0 second for all values of effective damping. Interpolation may be used for intermediate values of effective damping at periods of the *structure* between 0 second and $T_S/5$ seconds.

13A.3.2 Effective Damping: The effective damping at the *design displacement*, β_{mD}, and at the *maximum displacement*, β_{mM}, of the mth mode of vibration of the *structure* in the direction under consideration shall be calculated as follows:

$$\beta_{mD} = \beta_I + \beta_{Vm}\sqrt{\mu_D} + \beta_{HD} \qquad (13A.3.2\text{-}1)$$

$$\beta_{mM} = \beta_I + \beta_{Vm}\sqrt{\mu_M} + \beta_{HM} \qquad (13A.3.2\text{-}2)$$

where:

β_{HD} = component of effective damping of the *structure* in the direction of interest due to post-yield hysteretic behavior of the *seismic-force-resisting system* and elements of the *damping system* at effective ductility demand, μ_D;

β_{HM} = component of effective damping of the *structure* in the direction of interest due to post-yield hysteretic behavior of the *seismic-force-resisting system* and elements of the *damping system* at effective ductility demand, μ_M;

β_I = component of effective damping of the *structure* due to the inherent dissipation of energy by elements of the *structure,* at or just below the effective yield displacement of the *seismic-force-resisting system*;

β_{Vm} = component of effective damping of the mth mode of vibration of the *structure* in the direction of interest due to viscous dissipation of energy by the *damping system*, at or just below the effective yield displacement of the *seismic-force-resisting system*;

μ_D = effective ductility demand on the *seismic-force-resisting system* in the direction of interest due to the *design earthquake*; and

μ_M = effective ductility demand on the *seismic-force-resisting system* in the direction of interest due to the *maximum considered earthquake*.

Unless analysis or test data supports other values, the effective ductility demand of higher modes of vibration in the direction of interest shall be taken as 1.0.

13A.3.2.1 Inherent Damping: Inherent damping, β_I, shall be based on the material type, configuration and behavior of the *structure* and nonstructural components responding dynamically at or just below yield of the *seismic-force-resisting system*. Unless analysis or test data supports other values, inherent damping shall be taken as not greater than 5 percent of critical for all modes of vibration.

13A.3.2.2 Hysteretic Damping: Hysteretic damping of the *seismic-force-resisting system* and elements of the *damping system* shall be based either on test or analysis, or in accordance with the following equations:

$$\beta_{HD} = q_H \left(0.64 - \beta_I\right)\left(1 - \frac{1}{\mu_D}\right) \qquad \text{(13A.3.2.2-1)}$$

$$\beta_{HM} = q_H \left(0.64 - \beta_I\right)\left(1 - \frac{1}{\mu_M}\right) \qquad \text{(13A.3.2.2-2)}$$

where:

q_H = hysteresis loop adjustment factor, as defined in Sec. 13A.3.3;

μ_D = effective ductility demand on the *seismic-force-resisting system* in the direction of interest due to the *design earthquake*, as defined in Sec. A.13.3.4; and

μ_M = effective ductility demand on the *seismic-force-resisting system* in the direction of interest due to the *maximum considered earthquake*, as defined in Sec. 13A.3.4.

Unless analysis or test data supports other values, the hysteretic damping of higher modes of vibration in the direction of interest shall be taken as zero.

13A.3.2.3 Viscous Damping: Viscous damping of the mth mode of vibration of the *structure*, β_{Vm}, shall be calculated as follows:

$$\beta_{Vm} = \frac{\sum_j W_{mj}}{4\pi W_m} \qquad (13A.3.2.3\text{-}1)$$

$$W_m = \frac{1}{2}\sum_i F_{im}\delta_{im} \qquad (13A.3.2.3\text{-}2)$$

where:

W_{mj} = work done by j^{th} damping device in one complete cycle of dynamic response corresponding to the mth mode of vibration of the *structure* in the direction of interest at modal displacements, δ_{im};

W_m = maximum strain energy in the mth mode of vibration of the *structure* in the direction of interest at modal displacements, δ_{im};

F_{im} = m^{th} mode inertial force at Level i (or mass point); and

δ_{im} = deflection of Level i (or mass point) in the mth mode of vibration at the center of rigidity of the *structure* in the direction under consideration.

Viscous modal damping of *displacement-dependent damping devices* shall be based on a response amplitude equal to the effective yield displacement of the *structure.*

The calculation of the work done by individual *damping devices* shall consider orientation and participation of each device with respect to the mode of vibration of interest. The work done by individual *damping devices* shall be reduced as required to account for the flexibility of elements, including pins, bolts, gusset plates, brace extensions, and other components that connect *damping devices* to other elements of the *structure*.

13A.3.3 Hysteresis Loop Adjustment Factor: Hysteretic damping of the *seismic-force-resisting* system and elements of the *damping system* shall consider pinching and other effects that reduce the area of the hysteresis loop during repeated cycles of earthquake demand. Unless analysis or test data support other values, the fraction of full hysteretic loop area of the *seismic-force-resisting system* used for design shall be taken as equal to the factor, q_H, as defined below:

$$q_H = 0.67\frac{T_S}{T_1} \qquad (13A.3.3\text{-}1)$$

where:

T_s = period, in seconds, defined by the ratio, S_{D1}/S_{DS}, and

T_1 = period, in seconds of the fundamental mode of vibration of the *structure* in the direction of the interest.

The value of q_H shall not be taken as greater than 1.0, and need not be taken as less than 0.5.

13A.3.4 Effective Ductility Demand: The effective ductility demand of *seismic-force-resisting system* due to the *design earthquake*, μ_D, and due to the *maximum considered earthquake*, μ_M, shall be calculated as the ratio of the fundamental mode displacement, D_{1D} or D_{1M}, to effective yield displacement, D_Y:

$$\mu_D = \frac{D_{1D}}{D_Y} \geq 1.0 \qquad \text{(13A.3.4-1)}$$

$$\mu_M = \frac{D_{1M}}{D_Y} \geq 1.0 \qquad \text{(13A.3.4-2)}$$

$$D_Y = \left(\frac{g}{4\pi^2}\right)\left(\frac{\Omega_o C_d}{R}\right)\Gamma_1 C_{S1} T_1^2 \qquad \text{(13A.3.4-3)}$$

where:

D_{1D} = fundamental mode *design displacement* at the center of rigidity of the roof level of the *structure* in the direction under consideration, Sec. 13A.4.4.3 (in. or mm),

D_{1M} = fundamental mode *maximum displacement* at the center of rigidity of the roof level of *structure* in the direction under consideration, Sec. 13A.4.4.6 (in. or mm),

D_Y = displacement at the center of rigidity of the roof level of the *structure* at the effective yield point of the *seismic-force-resisting system,* Sec. 13A.3.4 (in. or mm),

R = response modification factor from Table 5.2.2,

C_d = deflection amplification factor from Table 5.2.2,

Ω_o = system overstrength factor from Table 5.2.2,

Γ_1 = participation factor of the fundamental mode of vibration of the *structure* in the direction of interest, Sec. 13A.4.3.3 or Sec. 13A.5.3.3 (m =1),

C_{S1} = *seismic response coefficient* (dimensionless) of the fundamental mode of vibration of the *structure* in the direction of interest, Sec. 13A.4.3.4 or Sec. 13A.5.3.4 (m =1), and

T_1 = period, in seconds, of the fundamental mode of vibration of the *structure* in the direction of interest.

Design earthquake ductility demand, μ_D, shall not exceed the maximum value of effective ductility demand, μ_{max}, given in Sec. 13A.3.5.

13A.3.5 Maximum Effective Ductility Demand: For determination of the hysteresis loop adjustment factor, hysteretic damping and other parameters, ductility demand used for design of the *structure* shall not exceed the maximum value of effective ductility demand, μ_{max}, as defined below:

For $T_{1D} < T_S$:

$$\mu_{max} = \frac{1}{2}\left(\left(\frac{R}{\Omega_o I}\right)^2 + 1\right) \qquad (13A.3.5\text{-}1)$$

For $T_1 \geq T_S$:

$$\mu_{max} = \frac{R}{\Omega_o I} \qquad (13A.3.5\text{-}2)$$

where:

I = the occupancy importance factor determined in accordance with Sec. 1.4.

T_{1D} = effective period, in seconds, of the fundamental mode of vibration of the *structure* at the *design displacement* in the direction under consideration.

For periods: $T_1 \leq T_S \leq T_{1D}$, interpolation shall be used to determine μ_{max}.

13A.4 EQUIVALENT LATERAL FORCE ANALYSIS PROCEDURE:

13A.4.1 General: This section provides required minimum standards for equivalent lateral force analysis of *structures* with a *damping system*. For purposes of analysis, the *structure* is considered to be fixed at the *base*. See Sec. 13A.2.6 for limitations on the use of this procedure.

Seismic base shear and lateral forces at floors used for design of the *seismic-force-resisting system* shall be based on the procedures of Sec. 13A.4.3. Seismic forces, displacements and velocities used for design of the *damping system* shall be based on the procedures of Sec. 13A.4.4.

The load combinations and acceptance criteria of Sec. 13A.7 shall be used to check design responses of *seismic-force-resisting* and *damping systems*, respectively.

13A.4.2 Modeling Requirements: Elements of the *seismic-force-resisting system* shall be modeled in a manner consistent with the requirements of Sec. 5.4.

Elements of the *damping system* shall be modeled as required to determine design forces transferred from *damping devices* to both the ground and the *seismic-force-resisting system*. The effective stiffness of *velocity-dependent damping devices* shall be modeled.

Damping devices need not be explicitly modeled provided effective damping is calculated in accordance with the procedures of Sec. 13A.3 and used to modify response as required in Sec. 13A.4.3 and 13A.4.4.

The stiffness and damping properties of the *damping devices* used in the models shall be based on or verified by testing of the *damping devices* as specified in Sec. 13A.10.

13A.4.3 Seismic-Force-Resisting-System Design Response:

13A.4.3.1 Seismic Base Shear: The seismic *base shear*, V, of the *seismic-force-resisting system* in a given direction shall be determined as the combination of the two modal components, V_1 and V_R, in accordance with the following equation:

$$V = \sqrt{V_1^2 + V_R^2} \geq V_{min} \qquad \text{(13A.4.3.1-1)}$$

where:

V_1 = design value of the seismic *base shear* of the fundamental mode in a given direction of response (kip or kN),

V_R = design value of the seismic *base shear* of the residual mode in a given direction (kip or kN), and

V_{min} = minimum allowable value of *base shear* permitted for design of the *seismic-force-resisting-system* of the *structure* in direction of the interest (kip or kN).

13A.4.3.2 Fundamental Mode Base Shear: Fundamental mode *base shear*, V_1, shall be determined in accordance with the following equation:

$$V_1 = C_{S1}\overline{W_1} \qquad \text{(13A.4.3.2-1)}$$

where:

$\overline{W_1}$ = the effective fundamental mode *gravity load* including portions of the *live load* as defined by Eq. 5.5.5-2 for m = 1 (kip or kN).

13A.4.3.3 Fundamental Mode Properties: Fundamental mode shape, ϕ_{i1}, and participation factor, Γ_1, shall be determined by either dynamic analysis of elastic structural properties and deformational characteristics of the resisting elements or in accordance with the following equations:

$$\phi_{i1} = \frac{h_i}{h_r} \qquad \text{(13A.4.3.3-1)}$$

$$\Gamma_1 = \frac{\overline{W_1}}{\sum_{i=1}^{n} w_i \phi_{i1}} \qquad \text{(13A.4.3.3-2)}$$

where:

h_i = the height of the *structure* above the *base* to Level i (ft or m),

h_r = the height of the *structure* above the *base* to the roof level (ft or m), and

w_i = the portion of the total *gravity load*, W, located or assigned to Level i.

The fundamental period, T_1, shall be determined either by dynamic analysis of elastic structural properties and deformational characteristics of the resisting elements, or in accordance with the following equation:

$$T_1 = 2\pi\sqrt{\frac{\sum_{i=1}^{n} w_i \delta_i^2}{g\sum_{i=1}^{n} f_i \delta_i}} \qquad \text{(13A.4.3.3-3)}$$

where:

f_i = lateral force at Level i of the *structure* distributed in accordance with Eq. 5.4.3-2, and

δ_i = elastic deflection at Level i of the *structure* due to applied lateral forces f_i.

13A.4.3.4 Fundamental Mode Seismic Response Coefficient: The fundamental mode seismic response coefficient, C_{S1}, shall be determined in accordance with the following equations:

For $T_{1D} < T_S$:

$$C_{S1} = \left(\frac{R}{C_d}\right)\frac{S_{DS}}{\Omega_o B_{1D}} \qquad \text{(13A.4.3.4-1)}$$

For $T_{1D} \geq T_S$:

$$C_{S1} = \left(\frac{R}{C_d}\right)\frac{S_{D1}}{T_{1D}\left(\Omega_o B_{1D}\right)} \qquad \text{(13A.4.3.4-2)}$$

where:

S_{DS} = the design spectral response acceleration in the short period range as determined from Sec. 4.1.2.5,

S_{D1} = the design spectral response acceleration at a period of 1 second as determined from Sec. 4.1.2.5,

B_{1D} = numerical coefficient as set forth in Table 13A.3.1 for effective damping equal to β_{mD} (m = 1) and period of the *structure* equal to T_{1D},

13A.4.3.5 Effective Fundamental Mode Period Determination: The effective fundamental mode period at the *design earthquake*, T_{1D}, and at the *maximum considered earthquake*, T_{1M}, shall be based either on explicit consideration of the post-yield force deflection characteristics of the *structure* or in accordance with the following equations:

$$T_{1D} = T_1 \sqrt{\mu_D} \qquad \text{(13A.4.3.5-1)}$$

$$T_{1M} = T_1 \sqrt{\mu_M} \qquad \text{(13A.4.3.5-2)}$$

where:

T_{1M} = effective period, in seconds, of the fundamental mode of vibration of the *structure* at the *maximum displacement* in the direction under consideration.

13A.4.3.6 Residual Mode Base Shear: Residual mode *base shear*, V_R, shall be determined in accordance with the following equation:

$$V_R = C_{SR} \overline{W_R} \qquad \text{(13A.4.3.6-1)}$$

where:

C_{SR} = the residual mode *seismic response coefficient* as determined in Sec. 13A.4.3.8, and

$\overline{W_R}$ = the effective residual mode *gravity load* of the *structure* determined in accordance with Eq. 13A.4.3.7-3 (kip or kN).

13A.4.3.7 Residual Mode Properties: Residual mode shape, ϕ_{iR}, participation factor, Γ_R, effective gravity load of the *structure*, $\overline{W_R}$, and effective period, T_R, shall be determined in accordance with the following equations:

$$\phi_{iR} = \frac{1 - \Gamma_1 \phi_{i1}}{1 - \Gamma_1} \qquad \text{(13A.4.3.7-1)}$$

$$\Gamma_R = 1 - \Gamma_1 \qquad \text{(13A.4.3.7-2)}$$

$$\overline{W_R} = W - \overline{W_1} \qquad \text{(13A.4.3.7-3)}$$

$$T_R = 0.4 T_1 \qquad \text{(13A.4.3.7-4)}$$

13A.4.3.8 Residual Mode Seismic Response Coefficient: The residual mode seismic response coefficient, C_{SR}, shall be determined in accordance with the following equation:

$$C_{SR} = \left(\frac{R}{C_d}\right)\frac{S_{DS}}{\Omega_o B_R} \qquad \text{(A13.4.3.8-1)}$$

where:

B_R = Numerical coefficient as set forth in Table 13A.3.1 for effective damping equal to β_R, and period of the *structure* equal to T_R.

13A.4.3.9 Design Lateral Force: Design lateral force in elements of the *seismic-force-resisting system* at Level *i* due to fundamental mode response, F_{i1}, and residual mode response, F_{iR}, of the *structure* in the direction of interest shall be determined in accordance with the following equations:

$$F_{il} = w_i \phi_{i1} \frac{\Gamma_1}{\overline{W}_1} V_1 \qquad \text{(13A.4.3.9-1)}$$

$$F_{iR} = w_i \phi_{iR} \frac{\Gamma_R}{\overline{W}_R} V_R \qquad \text{(13A.4.3.9-2)}$$

Design forces in elements of the *seismic-force-resisting system* shall be determined as the square-root-sum-of-squares of the forces due to fundamental and residual modes.

13A.4.4 Damping System Design Response:

13A.4.4.1 General: Design forces in *damping devices* and other elements of the *damping system* shall be determined on the basis of the floor deflection, story drift and story velocity response parameters described in the following sections.

Displacements and velocities used to determine maximum forces in *damping devices* at each story shall account for the angle of orientation from horizontal and consider the effects of increased response due to torsion required for design of the *seismic-force-resisting system*.

Floor deflections at Level *i*, δ_{iD} and δ_{iM}, design story drifts, Δ_D and Δ_M, and design story velocities, ∇_D and ∇_M, shall be calculated for both the *design earthquake* and the *maximum considered earthquake*, respectively, in accordance with the following sections.

13A.4.4.2 Design Earthquake Floor Deflection: Fundamental and residual mode deflections due to the *design earthquake,* δ_{i1D} and δ_{iRD} (in. or mm), at the center of rigidity of Level *i* of the *structure* in the direction of interest shall be determined in accordance with the following equations:

$$\delta_{i1D} = D_{1D}\phi_{i1} \qquad \text{(13A.4.4.2-1)}$$

$$\delta_{iRD} = D_{RD}\phi_{iR} \qquad \text{(13A.4.4.2-2)}$$

where:

D_{RD} = Residual mode *design displacement* at the center of rigidity of the roof level of the *structure* in the direction under consideration, Sec. 13A.4.4.3 (in. or mm).

The total *design earthquake* deflection at each floor of the s*tructure* in the direction of interest shall be calculated as the square-root-sum-of-squares of fundamental and residual mode floor deflections.

13A.4.4.3 Design Earthquake Roof Displacement: Fundamental and residual mode displacements due to the *design earthquake*, D_{1D} and D_{1R} (in.or mm) at the center of rigidity of the roof level of the *structure* in the direction of interest shall be determined in accordance with the following equations:

$$D_{1D} = \left(\frac{g}{4\pi^2}\right)\Gamma_1 \frac{S_{D1}T_{1D}}{B_{1D}} \le \left(\frac{g}{4\pi^2}\right)\Gamma_1 \frac{S_{DS}T_{1D}^2}{B_{1D}} \qquad \text{(13A.4.4.3-1)}$$

$$D_{RD} = \left(\frac{g}{4\pi^2}\right)\Gamma_R \frac{S_{D1}T_R}{B_R} \le \left(\frac{g}{4\pi^2}\right)\Gamma_R \frac{S_{DS}T_R^2}{B_R} \qquad \text{(13A.4.4.3-2)}$$

13A.4.4.4 Design Earthquake Story Drift: *Design earthquake* story drift, Δ_D, of the *structure* in the direction of interest shall be calculated in accordance with the following equation:

$$\Delta_D = \sqrt{\Delta_{1D}^2 + \Delta_{RD}^2} \qquad \text{(13A.4.4.4-1)}$$

where:

Δ_{1D} = *design earthquake* story drift due to the fundamental mode of vibration of the *structure* in the direction of interest (in. or mm) and

Δ_{RD} = *design earthquake* story drift due to the residual mode of vibration of the *structure* in the direction of interest (in. or mm).

Modal *design earthquake* story drifts, Δ_{1D} and Δ_{1R}, shall be determined in accordance with Sec. 5.3.7.1 using the floor deflections of Sec. 13A.4.4.2.

13A.4.4.5 Design Earthquake Story Velocity: *Design earthquake* story velocity, V_D, of the *structure* in the direction of interest shall be calculated in accordance with the following equations:

$$V_D = \sqrt{V_{1D}^2 + V_{RD}^2} \qquad \text{(13A.4.4.5-1)}$$

$$V_{1D} = 2\pi \frac{\Delta_{1D}}{T_{1D}} \qquad \text{(13A.4.4.5-2)}$$

$$\nabla_{RD} = 2\pi \frac{\Delta_{RD}}{T_R} \qquad (13A.4.4.5\text{-}3)$$

where:

∇_{1D} = *design earthquake* story velocity due to the fundamental mode of vibration of the *structure* in the direction of interest (in./sec or mm/sec), and

∇_{RD} = *design earthquake* story velocity due to the residual mode of vibration of the *structure* in the direction of interest (in./sec or mm/sec).

13A.4.4.6 Maximum Earthquake Response: Total and modal *maximum earthquake* floor deflections at Level *i*, design story drift values and design story velocity values shall be based on the formulas of Sec. 13A.4.2, 13A.4.4 and 13A.4.5, respectively, except *design earthquake* roof displacements shall be replaced by *maximum earthquake* roof displacements. *Maximum earthquake* roof displacements shall be calculated in accordance with the following equations:

$$D_{1M} = \left(\frac{g}{4\pi^2}\right)\Gamma_1 \frac{S_{M1}T_{1M}}{B_{1M}} \le \left(\frac{g}{4\pi^2}\right)\Gamma_1 \frac{S_{MS}T_{1M}^2}{B_{1M}} \qquad (13A.4.4.6\text{-}1)$$

$$D_{RM} = \left(\frac{g}{4\pi^2}\right)\Gamma_R \frac{S_{M1}T_R}{B_R} \le \left(\frac{g}{4\pi^2}\right)\Gamma_R \frac{S_{MS}T_R^2}{B_R} \qquad (13A.4.4.6\text{-}2)$$

where:

S_{M1} = the *maximum considered earthquake*, 5 percent damped, spectral response acceleration at a period of 1 second adjusted for *site class* effects as defined in Sec.4.1.2.

S_{MS} = the *maximum considered earthquake*, 5 percent damped, spectral response acceleration at short periods adjusted for *site class* effects as defined in Sec. 4.1.2.

B_{1M} = Numerical coefficient as set forth in Table 13A.3.1 for effective damping equal to β_{mM} (m = 1) and period of *structure* equal to T_{1M}.

13A.5 RESPONSE SPECTRUM ANALYSIS PROCEDURE

13A.5.1 General: This section provides required standards for response spectrum analysis of *structures* with a *damping system*. See Sec. 13A.2.6 for limitations on the use of this procedure.

Seismic *base shear* and lateral forces at floors used for design of the *seismic-force-resisting system* shall be based on the procedures of Sec. 13A.3.2. Seismic forces, displacements and velocities used for design of the *damping system* shall be based on the procedures of Sec. 13A.3.

The load combinations and acceptance criteria of Sec. 13A.7 shall be used to check design responses of *seismic-force-resisting system* and the *damping system*.

13A.5.2 Modeling and Analysis Requirements:

13A.5.2.1 General: A mathematical model of the *seismic-force-resisting system* and *damping system* shall be constructed that represents the spatial distribution of mass, stiffness and damping throughout the *structure*. The model and analysis shall conform to the requirements of Sec. 5.5.1, 5.5.2, and 5.5.3 for the *seismic-force-resisting system* and to the requirements of Sec. 13A.5.2.2 for the *damping system*. The stiffness and damping properties of the *damping devices* used in the models shall be based on or verified by testing of the *damping devices* as specified in Sec. 13A.10.

13A.5.2.2 Damping System: The elastic stiffness of elements of the *damping system* other than *damping devices* shall be explicitly modeled. Stiffness of *damping devices* shall be modeled depending on *damping device* type:

1. *Displacement-Dependent Damping Devices: Displacement-dependent damping devices* shall be modeled with an effective stiffness that represents *damping device* force at the response displacement of interest (e.g., design story drift). Alternatively, the stiffness of hysteretic and friction *damping devices* may be excluded from response spectrum analysis provided design forces in *displacement-dependent damping devices*, Q_{DSD}, are applied to the model as external loads (Sec. 13A.7.3.2).
2. *Velocity-Dependent Damping Devices: Velocity-dependent damping devices* that have a stiffness component (e.g., visco-elastic damping devices) shall be modeled with an effective stiffness corresponding to the amplitude and frequency of interest.

13A.5.3 Seismic-Force-Resisting-System Design Response:

13A.5.3.1 Seismic Base Shear: The seismic *base shear*, V, of the *structure* in a given direction shall be determined as the combination of modal components, V_m, subject to the limits of the following equation:

$$V \geq V_{min} \qquad \text{(13A.5.3.1-1)}$$

The seismic *base shear*, V, of the *structure* shall be determined by the square root sum of the squares or complete quadratic combination of modal *base shear* components, V_m.

13A.5.3.2 Modal Base Shear: Modal *base shear* of the mth mode of vibration, V_m, of the *structure* in the direction of interest shall be determined in accordance with the following equation:

$$V_m = C_{Sm}\overline{W_m} \qquad \text{(13A.5.3.2-1)}$$

where:

C_{Sm} = *seismic response coefficient* (dimensionless) of the mth mode of vibration of the *structure* in the direction of interest, Sec. 13A.5.3.4 (m = 1) or Sec. 13A.5.3.6 (m > 1) and

$\overline{W_m}$ = the effective gravity load of the mth mode of vibration of the *structure* determined in accordance with Eq. 5.4.4-2 (kip or kN).

13A.5.3.3 Modal Participation Factor: The modal participation factor of the mth mode of vibration, Γ_m, of the *structure* in the direction of interest shall be determined in accordance with the following equation:

$$\Gamma_m = \frac{\overline{W_m}}{\sum_{i=1}^{n} w_i \phi_{im}} \qquad \text{(13A.5.3.3-1)}$$

where:

ϕ_{im} = displacement amplitude at the ith level of the *structure* for the fixed base condition in the mth mode of vibration in the direction of interest, normalized to unity at the roof level.

13A.5.3.4 Fundamental Mode Seismic Response Coefficient: The fundamental mode (m = 1) *seismic response coefficient*, C_{S1}, in the direction of interest shall be determined in accordance with the following equations:

For $T_{1D} < T_S$:

$$C_{S1} = \left(\frac{R}{C_d}\right)\frac{S_{DS}}{\Omega_o B_{1D}} \qquad \text{(13A.5.3.4-1)}$$

For $T_{1D} \geq T_S$:

$$C_{S1} = \left(\frac{R}{C_d}\right)\frac{S_{D1}}{T_{1D}\left(\Omega_o B_{1D}\right)} \qquad \text{(13A.5.3.4-2)}$$

13A.5.3.5 Effective Fundamental Mode Period Determination: The effective fundamental mode (m = 1) period at the *design earthquake*, T_{1D}, and at the *maximum considered earthquake*, T_{1M}, shall be based either on explicit consideration of the post-yield nonlinear force deflection characteristics of the *structure* or determined in accordance with the following equations:

$$T_{1D} = T_1\sqrt{\mu_D} \qquad \text{(13A.4.3.5-1)}$$

$$T_{1M} = T_1\sqrt{\mu_M} \qquad \text{(13A.4.3.5-2)}$$

13A.5.3.6 Higher Mode Seismic Response Coefficient: Higher mode (m > 1) seismic response coefficient, C_{Sm}, of the mth mode of vibration (m > 1) of the *structure* in the direction of interest shall be determined in accordance with the following equations:

For $T_m < T_S$:

$$C_{Sm} = \left(\frac{R}{C_d}\right)\frac{S_{DS}}{\Omega_o B_{mD}} \qquad (13A.5.3.6\text{-}1)$$

For $T_m \geq T_S$:

$$C_{Sm} = \left(\frac{R}{C_d}\right)\frac{S_{D1}}{T_m\left(\Omega_o B_{mD}\right)} \qquad (13A.5.3.6\text{-}2)$$

where:

T_m = period, in seconds, of the mth mode of vibration of the *structure* in the direction under consideration and

B_{mD} = numerical coefficient as set forth in Table 13A.3.1 for effective damping equal to β_{mD} and period of the *structure* equal to T_m.

13A.5.3.7 Design Lateral Force: Design lateral force at Level *i* due to m^{th} mode of vibration, F_{im}, of the *structure* in the direction of interest shall be determined in accordance with the following equation:

$$F_{im} = w_i \phi_{im} \frac{\Gamma_m}{\overline{W}_m} V_m \qquad (13A.5.3.7\text{-}1)$$

Design forces in elements of the *seismic-force-resisting system* shall be determined by the square root sum of squares or complete quadratic combination of modal design forces.

13A.5.4 Damping System Design Response:

13A.5.4.1 General: Design forces in *damping devices* and other elements of the *damping system* shall be determined on the basis of the floor deflection, story drift and story velocity response parameters described in the following sections.

Displacements and velocities used to determine maximum forces in *damping devices* at each story shall account for the angle of orientation from horizontal and consider the effects of increased response due to torsion required for design of the *seismic-force-resisting system*.

Floor deflections at Level *i*, δ_{iD} and δ_{iM}, design story drifts, Δ_D and Δ_M, and design story velocities, ∇_D and ∇_M, shall be calculated for both the *design earthquake* and the *maximum considered earthquake*, respectively, in accordance with the following sections.

13A.5.4.2 Design Earthquake Floor Deflection: The deflection of *structure* due to the *design earthquake* at Level *i* in the mth mode of vibration, δ_{imD} (in. or mm), of the *structure* in the direction of interest shall be determined in accordance with the following equation:

$$\delta_{imD} = D_{mD}\phi_{im} \qquad (13A.5.4.2\text{-}1)$$

The total *design earthquake* deflection at each floor of the s*tructure* shall be calculated by the square root sum of squares or complete quadratic combination of modal *design earthquake* deflections.

13A.5.4.3 Design Earthquake Roof Displacement: Fundamental (m = 1) and higher mode (m > 1) roof displacements due to the *design earthquake*, D_{1D} and D_{mD} (in. or mm), of the *structure* in the direction of interest shall be determined in accordance with the following equations:

For m = 1:

$$D_{1D} = \left(\frac{g}{4\pi^2}\right)\Gamma_1 \frac{S_{D1}T_{1D}}{B_{1D}} \le \left(\frac{g}{4\pi^2}\right)\Gamma_1 \frac{S_{DS}T_{1D}^2}{B_{1D}} \qquad (13A.5.4.3\text{-}1)$$

For m > 1:

$$D_{mD} = \left(\frac{g}{4\pi^2}\right)\Gamma_m \frac{S_{D1}T_m}{B_{mD}} \le \left(\frac{g}{4\pi^2}\right)\Gamma_m \frac{S_{DS}T_m^2}{B_{mD}} \qquad (13A.5.4.3\text{-}2)$$

13A.5.4.4 Design Earthquake Story Drift: *Design earthquake* story drift of the fundamental mode, Δ_{1D}, and higher modes, Δ_{mD} (m > 1), of the *structure* in the direction of interest shall be calculated in accordance with Sec. 5.3.7.1 using modal roof displacements of Sec. 13A.5.4.3.

Total *design earthquake* story drift, Δ_D (in. or mm), shall be determined by the square root of the sum of squares or complete quadratic combination of modal *design earthquake* drifts.

13A.5.4.5 Design Earthquake Story Velocity: *Design earthquake* story velocity of the fundamental mode, ∇_{1D}, and higher modes, ∇_{mD} (m > 1), of the *structure* in the direction of interest shall be calculated in accordance with the following equations:

For m = 1:

$$\nabla_{1D} = 2\pi \frac{\Delta_{1D}}{T_{1D}} \qquad (13A.5.4.5\text{-}1)$$

For m > 1:

$$\nabla_{mD} = 2\pi \frac{\Delta_{mD}}{T_m} \qquad (13A.5.4.5\text{-}1)$$

Total *design earthquake* story velocity, ∇_D (in/sec or mm/sec), shall be determined by the square root of the sum of squares or complete quadratic combination of modal *design earthquake* velocities.

13A.5.4.6 Maximum Earthquake Response: Total modal floor deflection at Level i, design story drift values and design story velocity values shall be based on the formulas of Sec. 13A.5.4.2, 13A.5.4.4 and 13A.5.4.5, respectively, except *design earthquake* roof displacement shall be replaced by *maximum earthquake* roof displacement. *Maximum earthquake* roof displacement of the *structure* in the direction of interest shall be calculated in accordance with the following equations:

For m = 1:

$$D_{1M} = \left(\frac{g}{4\pi^2}\right)\Gamma_1 \frac{S_{M1}T_{1M}}{B_{1M}} \le \left(\frac{g}{4\pi^2}\right)\Gamma_1 \frac{S_{MS}T_{1M}^2}{B_{1M}} \qquad (13A.5.4.6\text{-}1)$$

For m > 1:

$$D_{mM} = \left(\frac{g}{4\pi^2}\right)\Gamma_m \frac{S_{M1}T_m}{B_{mM}} \le \left(\frac{g}{4\pi^2}\right)\Gamma_m \frac{S_{MS}T_m^2}{B_{mM}} \qquad (13A.5.4.6\text{-}2)$$

where:

B_{mM} = numerical coefficient as set forth in Table 13A.3.1 for effective damping equal to β_{mM} and period of the *structure* equal to T_m.

13A.6 NONLINEAR ANALYSIS PROCEDURES:

13A.6.1 General: The nonlinear procedures provided in Sec. 13A.6 supplement the nonlinear procedures of Sec. 5.7 and 5.8 to accommodate the use of *damping systems*.

The stiffness and damping properties of the *damping devices* used in the models shall be based on or verified by testing of the *damping devices* as specified in Sec. 13A.10.

13A.6.2. Nonlinear Static Analysis: The nonlinear modeling described in Sec. 5.7.1 and the lateral loads described in Sec. 5.7.2 shall be applied to the *seismic-force-resisting system.* The resulting force-displacement curve shall be used in lieu of the assumed effective yield displacement, D_Y, of Equation 13A.3.4-3 to calculate the effective ductility demand due to the *design earthquake*, μ_D, and due to the *maximum considered earthquake*, μ_M, in Eq. 13A.3.4-1 and 13A.3.4-2. The value of (R/C_d) shall be taken as 1.0 in Equations 13A.4.3.4-1, 13A.4.3.4-2 and 13A.4.3.8-1 for the equivalent lateral force analysis procedure, and in Eq. 13A.5.3.4-1, 13A.5.3.4-2, 13A.5.3.6-1, and 13A.5.3.6-2 of the response spectrum analysis procedure.

13A.6.3 Nonlinear Response History Analysis: A nonlinear response history (time history) analysis shall utilize a mathematical model of the *structure* and the *damping system* as provided in Sec. 5.8 and this section. The model shall directly account for the nonlinear hysteretic behavior of elements of the *structure* and the *damping devices* to determine its response, through methods of numerical integration, to suites of ground motions compatible with the design response spectrum for the site.

The analysis shall be performed in accordance with Sec. 5.8 together with the requirements of this section.

13A.6.3.1 Damping Device Modeling: Mathematical models of *displacement-dependent damping devices* shall include the hysteretic behavior of the devices consistent with test data and accounting for all significant changes in strength, stiffness, and hysteretic loop shape. Mathematical models of *velocity-dependent damping devices* shall include the velocity coefficient consistent with test data. If this coefficient changes with time and/or temperature, such behavior shall be modeled explicitly. The elements of *damping devices* connecting damper units to the *structure* shall be included in the model.

Exception: If the properties of the *damping devices* are expected to change during the duration of the time history analysis, the dynamic response may be enveloped by the upper and lower limits of device properties. All these limit cases for variable device properties must satisfy the same conditions as if the time dependent behavior of the devices were explicitly modeled.

13A.6.3.2 Response Parameters: In addition to the response parameters given in Sec. 5.8.3, the *design earthquake* and *maximum considered earthquake* displacements, velocities, and forces of the *damping devices* shall be determined.

13A.7 SEISMIC LOAD CONDITIONS AND ACCEPTANCE CRITERIA:

13A.7.1 General: Design forces and displacements determined in accordance with the equivalent lateral force analysis procedures of Sec. 13A.4 or the response spectrum analysis procedure of Sec. 13.5 shall be checked using the strength design criteria of these *Provisions* and the seismic loading conditions of the following sections.

13A.7.2 Seismic-Force-Resisting System: The *seismic-force-resisting system* shall meet the design provisions of Sec. 5.2.2 using seismic *base shear* and design forces determined in accordance with Sec. 13A.4.3 or Sec 13A.5.3.

The design earthquake story drift, Δ_D, as determined in either Sec. 13A.4.4.4 or 13A.5.4.4 shall not exceed (R/C_d) times the allowable story drift, as obtained from Table 5.2.8, considering the effects of torsion as required in Sec. 5.2.8.

13A.7.3 Damping System: The *damping system* shall meet the provisions of Sec. 5.2.2 for seismic design forces determined in accordance with Sec. 13A.7.3.1 and the seismic loading conditions of Sec. 13A.7.3.2 and Sec. 13A.5.4.

13A.7.3.1 Modal Damping System Design Forces: Modal *damping system* design forces shall be calculated on the basis of the type of *damping devices,* and the modal design story displacements and modal design story velocities determined in accordance with either Sec. 13A.4.4 or Sec. 13A.5.4.

Exception: Modal design story displacements and velocities determined in accordance with either Sec. 13A.4.4 or Sec. 13A.5.4 shall be increased as required to envelop total design story displacements and velocities determined in accordance with Sec. 13A.6, when Sec. 13A.2.6.4.3 requires peak response to be confirmed by time history analysis.

1. *Displacement-Dependent Damping Devices:* Design seismic force in *displacement-dependent damping devices* shall be based on the maximum force in the device at displacements up to and including the *design earthquake* story drift, Δ_D.

2. *Velocity-Dependent Damping Devices:* Design seismic force in each mode of vibration of *velocity-dependent damping devices* shall be based on the maximum force in the device at velocities up to and including the *design earthquake* story velocity of the mode of interest.

Displacements and velocities used to determine design forces in *damping devices* at each story shall account for the angle of orientation from horizontal and consider the effects of increased floor response due to torsional motions.

13A.7.3.2 Seismic Load Conditions and Combination of Modal Responses: Seismic design force, Q_E, in each element of the *damping system* due to horizontal earthquake load shall be taken as the maximum force of the following three loading conditions:

1. Stage of Maximum Displacement: Seismic design force at the stage of maximum displacement shall be calculated in accordance with the following equation:

$$Q_E = \Omega_o \sqrt{\sum_m \left(Q_{mSFRS}\right)^2} \pm Q_{DSD} \qquad (13A.7.3.2\text{-}1)$$

where:

Q_{mSFRS} = Force in an element of the *damping system* equal to the design seismic force of the mth mode of vibration of the *seismic-force-resisting system* in the direction of interest.

Q_{DSD} = Force in an element of the *damping system* required to resist design seismic forces of *displacement-dependent damping devices*.

Seismic forces in elements of the *damping system,* Q_{DSD}, shall be calculated by imposing design forces of *displacement-dependent damping devices* on the *damping system* as pseudo-static forces. Design seismic forces of *displacement-dependent damping devices* shall be applied in both positive and negative directions at peak displacement of the *structure*.

2. Stage of Maximum Velocity: Seismic design force at the stage of maximum velocity shall be calculated in accordance with the following equation:

$$Q_E = \sqrt{\sum_m \left(Q_{mDSV}\right)^2} \qquad (13A.7.3.2\text{-}2)$$

where:

Q_{mDSV} = Force in an element of the *damping system* required to resist design seismic forces of *velocity-dependent damping devices* due to the mth mode of vibration of *structure* in the direction of interest.

Modal seismic design forces in elements of the *damping system,* Q_{mDSV}, shall be calculated by imposing modal design forces of *velocity-dependent devices* on the non-deformed *damping system* as pseudo-static forces. Modal seismic design forces shall be applied in directions consistent with the deformed shape of the mode of interest. Horizontal restraint forces shall be applied at each floor Level *i* of the non-deformed *damping system* concurrent with the design forces in *velocity-dependent damping devices* such that the horizontal displacement at each level of the *structure* is zero. At each floor Level *i*, restraint forces shall be proportional to and applied at the location of each mass point.

3. Stage of Maximum Acceleration: Seismic design force at the stage of maximum acceleration shall be calculated in accordance with the following equation:

$$Q_E = \sqrt{\sum_m \left(C_{mFD}\Omega_o Q_{mSFRS} + C_{mFV}Q_{mDSV}\right)^2} \pm Q_{DSD} \qquad (13A.7.3.2\text{-}3)$$

The force coefficients, C_{mFD} and C_{mFV}, shall be determined from Tables 13A.7.3.2.1 and 13A.7.3.2.2, respectively, using values of effective damping determined in accordance with the following requirements:

a. For fundamental-mode response (m = 1) in the direction of interest, the coefficients, C_{1FD} and C_{1FV}, shall be based on the velocity power term, α, that relates device force to *damping device* velocity. The effective fundamental-mode damping, shall be taken as equal to the total effective damping of the fundamental mode less the hysteretic component of damping (e.g., β_{1D} - β_{HD}) at the response level of interest (i.e., $\mu = \mu_D$ or $\mu = \mu_M$).

b. For higher-mode (m > 1) or residual-mode response in the direction of interest, the coefficients, C_{mFD} and C_{mFV}, shall be based on a value of α equal to 1.0. The effective modal damping shall be taken as equal to the total effective damping of the mode of interest (e.g., β_{mD}). For determination of the coefficient C_{mFD}, the ductility demand shall be taken as equal to that of the fundamental mode (e.g., $\mu = \mu_D$).

Table 13A.7.3.2.1 Force Coefficient, C_{mFD}[a, b]

Effective Damping	$\mu \le 1.0$				C_{mFD} =1.0[c]
	$\alpha \le 0.25$	$\alpha = 0.5$	$\alpha = 0.75$	$\alpha \ge 1.0$	
≤ 0.05	1.00	1.00	1.00	1.00	$\mu \ge 1.0$
0.1	1.00	1.00	1.00	1.00	$\mu \ge 1.0$
0.2	1.00	0.95	0.94	0.93	$\mu \ge 1.1$
0.3	1.00	0.92	0.88	0.86	$\mu \ge 1.2$
0.4	1.00	0.88	0.81	0.78	$\mu \ge 1.3$
0.5	1.00	0.84	0.73	0.71	$\mu \ge 1.4$
0.6	1.00	0.79	0.64	0.64	$\mu \ge 1.6$
0.7	1.00	0.75	0.55	0.58	$\mu \ge 1.7$
0.8	1.00	0.70	0.50	0.53	$\mu \ge 1.9$
0.9	1.00	0.66	0.50	0.50	$\mu \ge 2.1$
≥ 1.0	1.00	0.62	0.50	0.50	$\mu \ge 2.2$

Effective Damping	$\mu \leq 1.0$				C_{mFD} =1.0[c]
	$\alpha \leq 0.25$	$\alpha = 0.5$	$\alpha = 0.75$	$\alpha \geq 1.0$	

[a] Unless analysis or test data support other values, the force coefficient C_{mFD} for visco-elastic systems shall be taken as 1.0.
[b] Interpolation shall be used for intermediate values of effective damping, α, and μ.
[c] C_{mFD} shall be taken as equal to 1.0 for values of μ greater than or equal to the values shown.

Table 13A.7.3.2.2 Force Coefficient, C_{mFV} [a, b]

Effective Damping	$\alpha \leq 0.25$	$\alpha = 0.5$	$\alpha = 0.75$	$\alpha \geq 1.0$
≤ 0.05	1.00	0.35	0.20	0.10
0.1	1.00	0.44	0.31	0.20
0.2	1.00	0.56	0.46	0.37
0.3	1.00	0.64	0.58	0.51
0.4	1.00	0.70	0.69	0.62
0.5	1.00	0.75	0.77	0.71
0.6	1.00	0.80	0.84	0.77
0.7	1.00	0.83	0.90	0.81
0.8	1.00	0.90	0.94	0.90
0.9	1.00	1.00	1.00	1.00
≥ 1.0	1.00	1.00	1.00	1.00

[a] Unless analysis or test data support other values, the force coefficient C_{mFD} for visco-elastic systems shall be taken as 1.0.
[b] Interpolation shall be used for intermediate values of effective damping, α, and μ.

13A.7.3.3 Combination of Load Effects: The effects on the *damping system* and its *components* due to *gravity loads* and *seismic forces* shall be combined in accordance with Sec. 5.2.7 using the effect of horizontal seismic forces, Q_E, determined in accordance with Sec. 13A.7.3.2.

> **Exception:** The reliability factor, ρ, shall be taken as equal to 1.0 in all cases and the special load combinations of Sec. 5.2.7.1 need not apply to the design of the *damping system*.

13A.7.3.4 Inelastic Response Limits: Elements of the *damping system* may exceed strength limits for design loads provided it is shown by analysis or test that:

1. Inelastic response does not adversely affect *damping system* function.
2. Element forces calculated in accordance with Sec. 13A.7.3.2, using a value of Ω_o, taken as equal to 1.0, do not exceed the strength required to meet the load combinations of Sec. 5.2.7.

13A.8 DETAILED SYSTEM REQUIREMENTS:

13A.8.1 Damping Device Design: The design, construction and installation of *damping devices* shall be based on maximum earthquake response and the following load conditions:

1. Low-cycle, large displacement degradation due to seismic loads;
2. High-cycle, small-displacement degradation due to wind, thermal or other cyclic loads;
3. Forces or displacements due to *gravity loads*;
4. Adhesion of device parts due to corrosion or abrasion, biodegradation, moisture or chemical exposure; and
5. Exposure to environmental conditions, including but not limited to temperature, humidity, moisture, radiation (e.g., ultraviolet light) and reactive or corrosive substances (e.g., salt water).

Damping devices subject to failure by low-cycle fatigue shall resist wind forces without slip, movement, or inelastic cycling.

The design of *damping device* shall incorporate the range of thermal conditions, device wear, manufacturing tolerances, and other effects that cause device properties to vary during the lifetime of the device.

13A.8.2 Multi-Axis Movement: Connection points of *damping devices* shall provide sufficient articulation to accommodate simultaneous longitudinal, lateral, and vertical displacements of the *damping system*.

13A.8.3 Inspection and Periodic Testing: Means of access for inspection and removal of all *damping devices* shall be provided.

The *registered design professional* responsible for design of the *structure* shall establish an appropriate inspection and testing schedule for each type of *damping device* to ensure that the devices respond in a dependable manner throughout device design life. The degree of inspection and testing shall reflect the established in-service history of the *damping devices*, and the likelihood of change in properties over the design life of devices.

13A.8.4 Manufacturing Quality Control: The *registered design professional* responsible for design of the *structure* shall establish a quality control plan for the manufacture of *damping devices*. As a minimum, this plan shall include the testing requirements of Sec. 13A.10.3.

13A.9 DESIGN REVIEW:

13A.9.1 General: Review of the design of the *damping system* and related test programs shall be performed by an independent engineering panel including persons licensed in the appropriate disciplines and experienced in seismic analysis including the theory and application of energy dissipation methods.

13A.9.2 Review Scope: The design review shall include the following:

1. Review of the earthquake ground motions used for design.
2. Review of design parameters of *damping devices*, including device test requirements, device manufacturing quality control and assurance, and scheduled maintenance and inspection requirements.
3. Review of nonlinear analysis methods incorporating the requirements of Sec. 5.8.4.
4. Review of the preliminary design of the *seismic-force-resisting system* and the *damping system*.
5. Review of the final design of the *seismic-force-resisting system* and the *damping system* and all supporting analyses.

13A.10 REQUIRED TESTS OF DAMPING DEVICES:

13A.10.1 General: The force-velocity-displacement and damping properties used for the design of the *damping system* shall be based on the prototype tests of a selected number of *damping devices*, as specified in Sec. 13A.10.2.1.

The fabrication and quality control procedures used for all prototype and production *damping devices* shall be identical.

13A.10.2 Prototype Tests:

13A.10.2.1 General: The following tests shall be performed separately on two full-size *damping devices* of each type and size used in the design, in the order listed below.

Representative sizes of each type of device may be used for prototype testing, provided both of the following conditions are met:

(1) Fabrication and quality control procedures are identical for each type and size of devices used in the *structure.*

(2) Prototype testing of representative sizes is accepted by the *registered design professional* responsible for design of the *structure.*

Test specimens shall not be used for construction, unless they are accepted by the *registered design professional* responsible for design of the *structure* and meet the requirements of Sec. 13A.10.2 and Sec. 13A.10.3.

13A.10.2.2 Data Recording: The force-deflection relationship for each cycle of each test shall be recorded.

13A.10.2.3 Sequence and Cycles of Testing: For the following test sequences, each *damping device* shall be subjected to gravity load effects and thermal environments representative of the installed condition. For seismic testing, the displacement in the devices calculated for the

maximum considered earthquake, termed herein as the maximum earthquake device displacement, shall be used.

1. Each *damping device* shall be subjected to the number of cycles expected in the design windstorm, but not less than 2000 continuous fully reversed cycles of wind load. Wind load shall be at amplitudes expected in the design wind storm, and applied at a frequency equal to the inverse of the fundamental period of the building ($f_1 = 1/T_1$).

   Exception: *Damping devices* need not be subjected to these tests if they are not subject to wind-induced forces or displacements, or if the design wind force is less than the device yield or slip force.

2. Each *damping device* shall be loaded with 5 fully reversed, sinusoidal cycles at the maximum earthquake device displacement at a frequency equal to $1/T_{1M}$ as calculated in Sec. 13A.4.3.5. Where the *damping device* characteristics vary with operating temperature, these tests shall be conducted at a minimum of 3 temperatures (minimum, ambient, and maximum) that bracket the range of operating temperatures.

   Exceptions: *Damping devices* may be tested by alternative methods provided each of the following conditions is met:

   a. Alternative methods of testing are equivalent to the cyclic testing requirements of this section.

   b. Alternative methods capture the dependence of the *damping device* response on ambient temperature, frequency of loading, and temperature rise during testing.

   c. Alternative methods are accepted by the *registered design professional* responsible for the design of the *structure*.

3. If the force-deformation properties of the *damping device* at any displacement less than or equal the maximum earthquake device displacement change by more than 15 percent for changes in testing frequency from $1/T_{1M}$ to $2.5/T_1$, then the preceding tests shall also be performed at frequencies equal to $1/T_1$ and $2.5/T_1$.

   If reduced-scale prototypes are used to qualify the rate dependent properties of *damping devices*, the reduced-scale prototypes should be of the same type and materials, and manufactured with the same processes and quality control procedures, as full-scale prototypes, and tested at a similitude-scaled frequency that represents the full-scale loading rates.

13A.10.2.4 Testing Similar Devices: *Damping devices* need not be prototype tested provided that both of the following conditions are met:

1. The *damping device* manufacturer substantiates the similarity of previously tested devices.
2. All pertinent testing and other *damping device* data are made available to, and accepted by the *registered design professional* responsible for the design of the *structure.*

13A.10.2.5 Determination of Force-Velocity-Displacement Characteristics: The force-velocity displacement characteristics of a *damping device* shall be based on the cyclic load and displacement tests of prototype devices specified above. Effective stiffness of a *damping device* shall be calculated for each cycle of deformation using Eq. 13.9.3-1.

13A.10.2.6 Device Adequacy: The performance of a prototype *damping device* shall be assessed as adequate if all of the conditions listed below are satisfied. The 15-percent limits specified below may be increased by the *registered design professional* responsible for the design of the *structure* provided that the increased limit has been demonstrated by analysis to not have a deleterious effect on the response of the *structure*.

13A.10.2.6.1 Displacement-Dependent Devices:

1. For Sec. 13A.10.2.3 Test 1, no signs of damage including leakage, yielding, or breakage.

2. For Sec. 13A.10.2.3 Tests 2 and 3, the maximum force and minimum force at zero displacement for a *damping device* for any one cycle does not differ by more than plus or minus 15 percent from the average maximum and minimum forces at zero displacement as calculated from all cycles in that test at a specific frequency and temperature.

3. For Sec. 13A.10.2.3 Tests 2 and 3, the maximum force and minimum force at maximum earthquake device displacement for a *damping device* for any one cycle does not differ by more than plus or minus 15 percent from the average maximum and minimum forces at the *maximum earthquake* device displacement as calculated from all cycles in that test at a specific frequency and temperature.

4. For Sec. 13A.10.2.3 Tests 2 and 3, the area of hysteresis loop (E_{loop}) of a *damping device* for any one cycle does not differ by more than plus or minus 15 percent from the average area of the hysteresis loop as calculated from all cycles in that test at a specific frequency and temperature.

5. The average maximum and minimum forces at zero displacement and maximum earthquake displacement, and the average area of the hysteresis loop (E_{loop}), calculated for each test in the sequence of Sec. 13A.10.2.3 Tests 2 and 3, shall not differ by more than plus or minus 15 percent from the target values specified by the *registered design professional* responsible for the design of the *structure*.

13A.10.2.6.2 Velocity-Dependent Devices:

1. For Sec. 13A.10.2.3 Test 1, no signs of damage including leakage, yielding, or breakage.

2. For *velocity-dependent damping devices* with stiffness, the effective stiffness of a *damping device* in any one cycle of Tests 2 and 3 of Sec. 13A.10.2.3 does not differ by more than plus or minus 15 percent from the average effective stiffness as calculated from all cycles in that test at a specific frequency and temperature.

3. For Sec. 13A.10.2.3 Tests 2 and 3, the maximum force and minimum force at zero displacement for a *damping device* for any one cycle does not differ by more than plus or minus 15 percent from the average maximum and minimum forces at zero displacement as calculated from all cycles in that test at a specific frequency and temperature.

4. For Sec. 13A.10.2.3 Tests 2 and 3, the area of hysteresis loop (E_{loop}) of a *damping device* for any one cycle does not differ by more than plus or minus 15 percent from the average area of the hysteresis loop as calculated from all cycles in that test at a specific frequency and temperature.

5. The average maximum and minimum forces at zero displacement, effective stiffness (for *damping devices* with stiffness only), and average area of the hysteresis loop (E_{loop}) calculated for each test in the sequence of Sec. 13A.10.2.3 Tests 2 and 3, shall not differ by more than plus or minus 15 percent from the target values specified by the *registered design professional* responsible for the design of the *structure*.

13A.10.3 Production Testing: Prior to installation in a building, *damping devices* shall be tested to ensure that their force-velocity-displacement characteristics fall within the limits set by the *registered design professional* responsible for the design of the *structure*. The scope and frequency of the production-testing program shall be determined by the *registered design professional* responsible for the design of the *structure*.

Chapter 14

NONBUILDING STRUCTURE DESIGN REQUIREMENTS

14.1 GENERAL:

14.1.1 Scope: *Nonbuilding structures* considered by the *Provisions* include all self-supporting *structures* which carry *gravity loads*, with the exception of: *buildings*, vehicular and railroad bridges, nuclear power generation plants, offshore platforms, and dams. *Nonbuilding structures* are supported by the earth or supported by other *structures*, and shall be designed and detailed to resist the minimum lateral forces specified in this chapter . Design shall conform to the applicable requirements of the *Provisions* as modified by this chapter. Nonbuilding structures that are beyond the scope of this section shall be designed in accordance with approved standards. Approved standards as referenced herein shall consist of standards approved by the authority having jurisdiction and shall be applicable to the specific type of nonbuilding structure.

The design of *nonbuilding structures* shall provide sufficient stiffness, strength, and ductility, consistent with the requirements specified herein for buildings, to resist the effects of seismic ground motions as represented by the following:

a. Applicable strength and other design criteria shall be obtained from other sections of the *Provisions* or its referenced codes and standards.

b. When applicable strength and other design criteria are not contained in or referenced by the *Provisions*, such criteria shall be obtained from approved standards. Where approved standards define acceptance criteria in terms of allowable stresses as opposed to strength, the design *seismic forces* shall be obtained from the *Provisions* and reduced by a factor of 1.4 for use with allowable stresses. Allowable stress increases used in approved standards are permitted. Detailing shall be in accordance with the approved standards.

14.2 REFERENCES:

ACI 313	American Concrete Institute (ACI), *Standard Practice for the Design and Construction of Concrete Silos and Stacking Tubes for Storing Granular Materials*, ACI 313, 1997
ACI 350.3	American Concrete Institute (ACI), *Standard Practice for the Seismic Design of Liquid-Containing Concrete Structures*, ACI 350.3/350.3R, 2001
ACI 371R-98	American Concrete Institute (ACI), *Guide to the Analysis, Design, and Construction of Concrete-Pedestal Water Towers*, ACI 371R, 1995
ANSI K61.1	American National Standards Institute (ANSI), *Safety Requirements for the Storage and Handling of Anhydrous Ammonia*, ANSI K61.1

ANSI/API 620	American Petroleum Institute (API), *Design and Construction of Large, Welded, Low Pressure Storage Tanks,* API 620, 1992
ANSI/API 650	American Petroleum Institute (API), Welded Steel Tanks For Oil Storage, API 650, 10th Edition, November 1998.
ANSI/API 653	American Petroleum Institute (API), *Tank Inspection, Repair, Alteration, and Reconstruction*, API 653, 2nd edition, December 1995
ANSI/API 2510	American Petroleum Institute (API), *Design and Construction of Liquefied Petroleum Gas Installation*, ANSI/API 2510, 7th Edition, May 1995
API Spec 12B	American Petroleum Institute (API), *Bolted Tanks for Storage of Production Liquids*, Specification 12B, 14th edition, February 1995
ASCE Task Rpt	American Society of Civil Engineers (ASCE) Petrochemical Energy Committee Task Report, *Design of Secondary Containment in Petrochemical Facilities*, 1997
ASCE 7	American Society of Civil Engineers (ASCE), *Minimum Design Loads for Buildings and Other Structures*, ASCE 7, 1998
ASME BVP	American Society of Mechanical Engineers (ASME), *Boiler And Pressure Vessel Code*, including addenda through 1998
ANSI/ASME	American Society of Mechanical Engineers (ASME), STS-1*Steel Stacks*, ASME STS, 1992
ASME B31.8	American Society of Mechanical Engineers (ASME), *Gas Transmission and Distribution Piping Systems*, ASTM B31.8, 1995
ASME B96.1	American Society of Mechanical Engineers (ASME), *Welded Aluminum-Alloy Storage Tanks*, ASME B96.1, 1993
ASTM F1159	American Society for Testing and Materials (ASTM), *Standard Practice for the Design and Manufacture of Amusement Rides and Devices*, ASTM F1159, 1992
ASTM C 1298	American Society of Testing and Materials (ASTM), *Standard Guide for Design and Construction of Brick Liners for Industrial Chimneys*. (ASTM C1298)
ANSI/AWWA D100 D5.2	American Water Works Association (AWWA), *Welded Steel Tanks AWS forWater Storage,* 1996
ANSI/AWWA D103	American Water Works Association (AWWA), *Factory-Coated Bolted Steel Tanks for Water Storage,* 1997
ANSI/AWWA D110	American Water Works Association AWWA), *Wire- and Strand-Wound Circular for Water Storage,* 1995
ANSI/AWWA D115	American Water Works Association (AWWA), *Circular Prestressed Concrete Tanks with Circumferential Tendons*, 1995

ANSI/NFPA 30	National Fire Protection Association (NFPA), *Flammable and Combustible Liquids Code*, 1996
ANSI/NFPA 58	National Fire Protection Association (NFPA), *Storage and Handling of Liquefied Petroleum Gas*, 1995
ANSI/NFPA 59	National Fire Protection Association (NFPA), *Storage and Handling of Liquefied Petroleum Gases at Utility Gas Plants*, 1998
ANSI/NFPA 59A	National Fire Protection Association (NFPA), *Production, Storage and Handling of Liquefied Natural Gas (LNG)*, 1996
RMI Specification	Rack Manufacturers Institute (RMI), *Specification for the Design, Testing, and Utilization of Industrial Steel Storage Racks*, 1997
Troitsky 1990	Troitsky, M. S., *Tubular Steel Structures*, 1990
49CFR, Part 193	U.S. Department of Transportation (DOT), *Pipeline Safety Regulations*, Title 49 CFR Part 193
NAVFAC R-939	U.S. Naval Facilities Command (NAVFAC), *The Seismic Design of Waterfront Retaining Structures*, NAVFAC R-939
NAVFAC DM-25.1	U.S. Naval Facilities Engineering Command (NAVFAC), *Piers and Wharves*. NAVFAC DM-25.1
Army TM 5-809-10/ NAVFAC P-355/ Air Force AFM 88-3	U.S. Army Corps of Engineers (USACE), *Seismic Design for Buildings* Chapter 13, 1992

14.3 INDUSTRY DESIGN STANDARDS AND RECOMMENDED PRACTICE: The following standards and references form a part of the *Provisions* as referenced herein.

TABLE 14.3 Standards, Industry Standards, and References

Application	Standard or Reference
Steel *Storage Racks*	RMI Specification
Piers and Wharves	NAVFAC R-939, NAVFAC DM-25.1
Welded Steel Tanks for Water Storage	AWWA D100
Welded Steel Tanks for Petroleum and Petrochemical Storage	API 650, API 620
Bolted Steel Tanks for Water Storage	AWWA D103
Concrete Tanks for Water Storage	AWWA D115, AWWA D110, ACI 350.3
Pressure Vessels	ASME
Refrigerated Liquids Storage:	
Liquid Oxygen, Nitrogen and Argon	NFPA 50
Liquefied Natural Gas (LNG)	NFPA 59A, DOT 49CFR
LPG (Propane, Butane, etc.)	NFPA 59, API 2510
Ammonia	ANSI K61.1
Concrete silos and stacking tubes	ACI 313
Petrochemical *structures*	ASCE Design of Secondary Containment

Application	Standard or Reference
	in Petrochemical Facilities
Impoundment dikes and *walls*:	
Hazardous Materials	ANSI K61.1
Flammable Materials	NFPA 30
Liquefied Natural Gas	NFPA 59A, DOT 49CFR
Cast-in-place concrete stacks and chimneys	ACI 307
Steel stacks and chimneys	ASME STS
Guyed steel stacks and chimneys	ASME STS, Troitsky 1990
Brick masonry liners for stacks and chimneys	ASTM C1298
Amusement *structures*	ASTM F1159

14.4 NONBUILDING STRUCTURES SUPPORTED BY OTHER STRUCTURES: If a *nonbuilding structure* is supported above the *base* by another *structure* and the weight of the *nonbuilding structure* is less than 25 percent of the combined weight of the *nonbuilding structure* and the supporting *structure*, the design *seismic forces* of the supported *nonbuilding structure* shall be determined in accordance with the requirements of Sec. 6.1.3.

If the weight of a *nonbuilding structure* is 25 percent or more of the combined weight of the *nonbuilding structure* and the supporting *structure*, the design *seismic forces* of the *nonbuilding structure* shall be determined based on the combined *nonbuilding structure* and supporting structural system. For supported *nonbuilding structures* that have non-rigid *component* dynamic characteristics, the combined system *R* factor shall be a maximum of 3. For supported *nonbuilding structures* that have rigid *component* dynamic characteristics (as defined in Sec. 14.2.2), the combined system *R* factor shall be the value of the supporting structural system. The supported *nonbuilding structure* and *attachments* shall be designed for the forces determined for the *nonbuilding structure* in a combined systems analysis.

14.4.1 Architectural, Mechanical, and Electrical Components: Architectural, mechanical, and electrical *components* supported by *nonbuilding structures* shall be designed in accordance with Chapter 6 of the *Provisions*.

14.5 STRUCTURAL DESIGN REQUIREMENTS:

14.5.1 Design Basis: *Nonbuilding structures* having specific seismic design criteria established in approved standards shall be designed using the standards as amended herein. In addition, *nonbuilding structures* shall be designed in compliance with Sec. 14.3 and 14.4 to resist minimum seismic lateral forces that are not less than the requirements of Sec. 5.4.1 with the following additions and exceptions:

1. The response modification coefficient, *R*, shall be the lesser of the values given in Table 14.5.1.1 or the values in Table 5.2.2.

2. For nonbuilding systems that have an *R* value provided in Table 14.5.2.1, the minimum specified value in Eq. 5.4.1.1-1 shall be replaced by:

$$C_s = 0.14 S_{DS} I \qquad (14.2.1\text{-}1)$$

and the minimum value specified in Eq. 5.3.2.1-4 shall be replaced by:

$$C_s = 0.8 S_1 I / R \qquad (14.2.1\text{-}2)$$

3. The overstrength factor, Ω_0, shall be as given in Table 14.5.1.1 or Table 5.2.2..
4. The importance factor, I, shall be as given in Table 14.5.1.2 .
5. The height limitations shall be as given in Table 14.5.1.1 or Table 5.2.2.
6. The vertical distribution of the lateral *seismic forces* in *nonbuilding structures* covered by this section shall be determined:
    a. In accordance with the requirements of Sec. 5.4.3 or
    b. In accordance with the procedures of Sec. 5.5 or
    c. In accordance with an approved standard applicable to the specific *nonbuilding structure*.
7. For nonbuilding structural systems containing liquids, gases, and granular solids supported at the base as defined in Sec. 14.7.3.1, the minimum seismic design force shall not be less than that required by the approved standard for the specific system.
8. Irregular *structures* per Sec. 5.2.3 at sites where the seismic coefficient S_{DS} is greater than or equal to 0.50 that cannot be modeled as a single mass shall use the procedures of Sec. 5.5.
9. Where an approved standard provides a basis for the earthquake resistant design of a particular type of *nonbuilding structure* such a standard may be used subject to the following limitations:
    a. The seismic ground acceleration and seismic coefficient shall be in conformance with the requirements of Sec. 4.1 and 4.2, respectively.
    b. The values for total lateral force and total *base* overturning moment used in design shall not be less than 80 percent of the *base shear* value and overturning moment, each adjusted for the effects of soil-*structure* interaction that would be obtained using the *Provisions*.
10. The *base shear* is permitted to be reduced in accordance with Sec. 5.5.7 to account for the effects of soil-*structure* interaction. In no case shall the reduced *base shear*, $\tilde{V}$, be less than $0.7V$.

14.5.1.1 Seismic Factors:

TABLE 14.5.1.1 Seismic Coefficients for Nonbuilding Structures

Nonbuilding Structure Type	R	Ω_0	C_d	Structural System and Height Limits (ft)[c]			
				Seismic Design Category			
				A & B	C	D	E & F
Nonbuilding frame systems:	See Table 5.2.2						
Concentric Braced Frames of Steel				NL	NL	NL	NL
Special Concentric Braced Frames of Steel				NL	NL	NL	NL
Moment Resisting Frame Systems:	See Table 5.2.2						
Special Moment Frames of Steel				NL	NL	NL	NL
Ordinary Moment Frames of Steel				NL	NL	50	50
Special Moment Frames of Concrete				NL	NL	NL	NL
Intermediate Moment Frames of Concrete				NL	NL	50	50
Ordinary Moment Frames of Concrete				NL	50	NP	NP
Steel *Storage Racks*	4	2	3-1/2	NL	NL	NL	NL
Elevated tanks, vessels, bins, or hoppers[a]:							
On braced legs	3	2	2-1/2	NL	NL	NL	NL
On unbraced legs	3	2	2-1/2	NL	NL	NL	NL
Irregular braced legs single pedestal or skirt supported	2	2	2	NL	NL	NL	NL
Welded steel	2	2	2	NL	NL	NL	NL
Concrete	2	2	2	NL	NL	NL	NL
Horizontal, saddle supported welded steel vessels	3	2	2-1/2	NL	NL	NL	NL
Tanks or vessels supported on structural towers similar to buildings	3	2	2	NL	NL	NL	NL
Flat bottom, ground supported tanks, or vessels:							
Anchored (welded or bolted steel)	3	2	2-1/2	NL	NL	NL	NL
Unanchored (welded or bolted steel)	2-1/2	2	2	NL	NL	NL	NL
Reinforced or prestressed concrete:							
Tanks with reinforced nonsliding *base*	2	2	2	NL	NL	NL	NL
Tanks with anchored flexible *base*	3	2	2	NL	NL	NL	NL
Tanks with unanchored and unconstrained:							
Flexible *base*	1-1/2	1-1/2	1-1/2	NL	NL	NL	NL
Other material	1 -/2	1-1/2	1-1/2	NL	NL	NL	NL
Cast-in-place concrete silos, stacks, and chimneys having *walls* continuous to the foundation	3	1-3/4	3	NL	NL	NL	NL

Nonbuilding Structure Type	***R***	Ω_0	C_d	**Structural System and Height Limits (ft)[c]**			
				Seismic Design Category			
				A & B	**C**	**D**	**E & F**
Reinforced masonry *structures*not similar to buildings	3	2	2-1/2	NL	NL	50	50
Nonreinforced masonry *structures* not similar to buildings	1-1/4	2	1-1/2	NL	50	50	50
Steel and reinforced concrete distributed mass cantilever *structures* not covered herein including stacks, chimneys, silos, and skirt-supported vertical vessels that are not similar to buildings	3	2	2-1/2	NL	NL	NL	NL
Trussed towers (freestanding or guyed), guyed stacks and chimneys	3	2	2-1/2	NL	NL	NL	NL
Cooling towers:							
Concrete or steel	3-1/2	1-3/4	3	NL	NL	NL	NL
Wood frame	3-1/2	3	3	NL	NL	50	50
Amusement *structures* and monuments	2	2	2	NL	NL	NL	NL
Inverted pendulum type *structures* (except elevated tanks, vessels, bins and hoppers)[b]	2	2	2	NL	NL	NL	NL
Signs and billboards	3-1/2	1-3/4	3	NL	NL	NL	NL
Self-supporting *structures*, tanks or vessels not covered above or by approved standards that are not similar to buildings	1-1/4	2	2-1/2	NL	50	50	50

[a] Support towers similar to building type *structures*, including those with irregularities (see Sec. 5.2.3 of the *Provisions* for definition of irregular *structures*) shall comply with the requirements of Sec. 5.2.6.

[b] Height shall be measured from the base.

NL = No limit.

14.5.1.2 Importance Factors and Seismic Use Group Classifications: The importance factor (*I*) and *seismic use group* for *nonbuilding structures* are based on the relative hazard of the contents, and the function. The value of *I* shall be the largest value determined by the approved standards, or the largest value as selected from Table 14.5.1.2 or as specified elsewhere in Chapter 14.

TABLE 14.5.1.2
Importance Factor (*I*) and Seismic Use Group Classification for Nonbuilding Structures

Importance Factor	I = 1.0	I = 1.25	I = 1.5
Seismic Use Group	**I**	**II**	**III**
Hazard	H - I	H - II	H - III
Function	F - I	F - II	F - III

H - I The nonbuilding structures that are not assigned to H-II or H-III.

H - II The nonbuilding structures that have a substantial public hazard due to contents or use as determined by the authority having jurisdiction.

H - III The nonbuilding structures containing sufficient quantities of toxic or explosive substance deemed to be hazardous to the public as determined by the authority having jurisdiction.

F - I *Nonbuilding structures* not classified as F - III.

F - II Not applicable for nonbuilding structures.

F - III The nonbuilding structures or designated ancillary nonbuilding structures that are required for post-earthquake recovery or as emergency back-up facilities for *Seismic Use Group* III *structures*.

14.5.2 Rigid Nonbuilding Structures: *Nonbuilding structures* that have a fundamental period, *T*, less than 0.06 sec, including their anchorages, shall be designed for the lateral force obtained from the following:

$$V = 0.30 S_{DS} W I \qquad (14.2.2)$$

where:

V = the total design lateral seismic *base shear* force applied to a *nonbuilding structure*,

S_{DS} = the site design response acceleration as determined from Sec. 4.2.2,

W = *nonbuilding structure* operating weight.

I = the importance factor as determined from Table 14.2.1.2.

The force shall be distributed with height in accordance with Sec. 5.4.3.

14.5.3 Loads: The weight, *W*, for *nonbuilding structures* shall include all *dead loads* as defined for *structures* in Sec. 5.4.3. For purposes of calculating design *seismic forces* in *nonbuilding structures*, *W* also shall include all normal operating contents for items such as tanks, vessels, bins, and hoppers and the contents of piping. *W* shall include snow and ice loads when these loads constitute 25 percent or more of *W* or when required by the authority having jurisdiction based on local environmental characteristics.

14.5.4 Fundamental Period: The fundamental period of the nonbuilding *structure* shall be determined by methods as prescribed in Sec. 5.4.2 or by other rational methods.

14.5.5 Drift Limitations: The drift limitations of Sec. 5.2.8 need not apply to *nonbuilding structures* if a rational analysis indicates they can be exceeded without adversely effecting structural stability or attached or interconnected components and elements such as walkways and piping. *P-delta effects* shall be considered when critical to the function or stability of the *structure*.

14.5.6 Materials Requirements: The requirements regarding specific materials in Chapters 8, 9, 10, 11, and 12 shall be applicable unless specifically exempted in this chapter.

14.5.7 Deflection Limits and Structure Separation: Deflection limits and *structure* separation shall be determined in accordance with the *Provisions* unless specifically amended in this chapter.

14.5.8 Site-Specific Response Spectra: Where required by an approved standard or the authority having jurisdiction, specific types of nonbuilding structures shall be designed for site-specific criteria that accounts for local seismicity and geology, expected recurrence intervals and magnitudes of events from known seismic hazards as provided for in Sec. 4.1.3 of the *Provisions*. If a longer recurrence interval is defined in the approval standard for the nonbuilding structure such as LNG tanks, the recurrence interval required in the standard shall be used

14.6 NONBUILDING STRUCTURES SIMILAR TO BUILDINGS:

14.6.1 General: *Nonbuilding structures* that have structural systems that are designed and constructed in a manner similar to buildings and have a dynamic response similar to building s*tructures* shall be designed similar to building *structures* and in compliance with the *Provisions* with exceptions as contained in this section.

This general category of *nonbuilding structures* shall be designed in accordance with Sec. 14.5.

The lateral force design procedure for *nonbuilding structures* with structural systems similar to building *structures* (those with structural systems listed in Table 5.2.2) shall be selected in accordance with the force and detailing requirements of Sec. 5.2.1.

The combination of load effects, *E*, shall be determined in accordance with Sec. 5.2.7.

14.6.2 Pipe Racks:

14.6.2.1 Design Basis: Pipe racks supported at the base shall be designed to meet the force requirements of Sec. 5.4 or 5.5.

Displacements of the pipe rack and potential for interaction effects (pounding of the piping system) shall be considered using the amplified deflections obtained from the following formula:

$$\delta_x = \frac{C_d \delta_{xe}}{I} \qquad (14.6.2.1)$$

where:

C_d = the deflection amplification factor in Table 14.5.1.1,

δ_{xe} = the deflections determined using the prescribed seismic design forces of the *Provisions*, and

I = the importance factor determined from Table 14.5.1.2.

Exception: The importance factor, I, shall be determined from Table 14.5.1.2 for the calculation of δ_{xe}.

See Sec. 3.3.11 for the design of piping systems and their *attachments*. Friction resulting from *gravity loads* shall not be considered to provide resistance to *seismic forces*.

14.6.3 Steel Storage Racks: Steel storage racks supported at or below grade shall be designed in accordance with Sec. 14.6.3 and the following or, alternatively, with the method detailed in Section 2.7 of the RMI Specification provided that when determining the value of C_a in Sec. 2.7.3 of the RMI Specification, the value of C_s is taken as equal to $S_{DS}/2.5$, the value of C_v is taken as equal to S_{D1}, and the value of I_p shall not be taken as less than that required in Sec. 6.1.5 of the *Provisions*. In addition, the value of C_s in the RMI Specification shall not be less than $0.14S_{DS}$. For storage racks supported above grade, the value of C_s in the RMI Specification shall not be less than the value determined for F_p in accordance with Sec. 6.2 of the *Provisions* with R_p taken as equal to R and a_p taken as equal to 2.5.

14.6.3.1 General Requirements: Steel *storage racks* shall satisfy the force requirements of this section.

Exception: Steel *storage racks* supported at the *base* are permitted to be designed as *structures* with an R of 4 provided that the requirements of Chapter 2 are met. Higher values of R are permitted to be used when justified by test data approved in accordance with Sec. 1.2.6 or when the detailing requirements of Chapter 5 and 10 are met. The importance factor I shall be taken equal to the I_p values in accordance with Sec. 6.1.5

14.6.3.2 Operating Weight: Steel *storage racks* shall be designed for each of the following conditions of operating weight, W or W_p.

a. Weight of the rack plus every storage level loaded to 67 percent of its rated load capacity.

b. Weight of the rack plus the highest storage level only loaded to 100 percent of its rated load capacity.

The design shall consider the actual height of the center of mass of each storage load *component*.

14.6.3.3 Vertical Distribution of Seismic Forces: For all steel *storage racks*, the vertical distribution of *seismic forces* shall be as specified in Sec. 5.4.3 and in accordance with the following:

a. The *base shear*, V, of the typical *structure* shall be the *base shear* of the steel *storage rack* when loaded in accordance with Sec. 14.6.3.2.

b. The *base* of the *structure* shall be the floor supporting the steel *storage rack*. Each steel storage level of the rack shall be treated as a level of the *structure*, with heights h_i, and h_x measured from the *base* of the *structure*.

c. The factor *k* may be taken as 1.0.

d. The factor *I* shall be in accordance with Sec. 6.1.5.

14.6.3.4 Seismic Displacements: Steel *storage rack* installations shall accommodate the seismic *displacement* of the *storage racks* and their contents relative to all adjacent or attached *components* and elements. The assumed total relative *displacement* for *storage racks* shall be not less than 5 percent of the height above the base unless a smaller value is justified by test data or analysis approved in accordance with Sec. 1.5.

14.6.4 Electrical Power Generating Facilities:

14.6.4.1 General: Electrical power generating facilities are power plants that generate electricity by steam turbines, combustion turbines, diesel generators or similar turbo machinery.

14.6.4.2 Design Basis: Electrical power generating facilities shall be designed using the *Provisions* and the appropriate factors contained in Sec. 14.5.

14.6.5 Structural Towers for Tanks and Vessels:

14.6.5.1 General: Structural towers which support tanks and vessels shall be designed to meet the provisions of Sec 14.4. In addition, the following special considerations shall be included:

a. The distribution of the lateral *base shear* from the tank or vessel onto the supporting *structure* shall consider the relative stiffness of the tank and resisting structural elements.

b. The distribution of the vertical reactions from the tank or vessel onto the supporting *structure* shall consider the relative stiffness of the tank and resisting structural elements. When the tank or vessel is supported on grillage beams, the calculated vertical reaction due to weight and overturning shall be increased at least 20 percent to account for nonuniform support. The grillage beam and vessel attachment shall be designed for this increased design value.

c. Seismic *displacements* of the tank and vessel shall consider the *deformation* of the support *structure* when determining *P-delta effects* or evaluating required clearances to prevent pounding of the tank on the *structure*.

14.6.6 Piers and Wharves:

14.6.6.1 General: Piers and wharves are *structures* located in waterfront areas that project into a body of water or parallel the shore line.

14.6.6.2 Design Basis: Piers and wharves shall be designed to comply with the *Provisions* and approved standards. *Seismic forces* on elements below the water level shall include the inertial force of the mass of the displaced water. The additional seismic mass equal to the mass of the displaced water shall be included as a lumped mass on the submerged element, and shall be added to the calculated *seismic forces* of the pier or wharf *structure*. Seismic dynamic forces from the soil shall be determined by the registered design professional.

The design shall account for the effects of liquefaction on piers and wharfs as required.

14.7 NONBUILDING STRUCTURES NOT SIMILAR TO BUILDINGS:

14.7.1 General: *Nonbuilding structures* that have structural systems that are designed and constructed in a manner such that the dynamic response is not similar to buildings shall be designed in compliance with the *Provisions* with exceptions as contained in this section.

This general category of *nonbuilding structures* shall be designed in accordance with the *Provisions* and the specific applicable approved standards. Loads and load distributions shall not be less than those determined in the *Provisions*.

The combination of load effects, *E*, shall be determined in accordance with Sec. 5.2.6.2.

Exception: The redundancy/reliability factor, ρ, per Sec. 5.2.4 shall be taken as 1.

14.7.2 Earth Retaining Structures:

14.7.2.1 General: This section applies to all earth retaining *walls*. The applied *seismic forces* shall be determined in accordance with Sec. 7.5.1 with a geotechnical analysis prepared by a *registered design professional*.

14.7.3 Tanks and Vessels:

14.7.3.1 General: This section applies to all tanks, vessels, bins, and silos and similar containers storing liquids, gases, and granular solids supported at the base (hereafter referred to generically as tanks and vessels). Tanks and vessels covered herein include reinforced concrete, prestressed concrete, steel, and fiber-reinforced plastic materials.

14.7.3.2 Design Basis: Tanks and vessels storing liquids, gases, and granular solids shall be designed in accordance with the *Provisions* and shall be designed to meet the requirements of the applicable approved standards shown in Table 14.3 and Chapter 4 of the *Provisions* as defined in this section. Resistance to seismic forces shall be determined from a substantiated analysis based on the approved standards shown in Table 14.3.

h. Damping for the convective (sloshing) force component shall be taken as 0.5 percent

i. Impulsive and convective components may be combined by the direct sum or the square root of the sum of the square (SRSS) method when the modal periods are separated. If modal coupling may occur, the complete quadratic combination (CQC) method shall be used.

j. Vertical component of ground acceleration shall be considered in accordance with the appropriate national standard. If the approved national standard permits the user the option of including or excluding the vertical component of ground acceleration to comply with the *Provisions*, it shall be included. For tanks and vessels not covered by an approved national standard, the vertical seismic force shall be defined as 67 percent of the equivalent lateral force.

14.7.3.3 Strength and Ductility: Structural *components* and members that are part of the lateral support system shall be designed to provide the following:

a. Connections and *attachments* for anchorage and other lateral force resisting *components* shall be designed to develop the strength of the anchor (e.g., minimum published yield strength, F_y in direct tension, plastic bending moment) or Ω_o times the calculated element design load.

b. Penetrations, manholes, and openings in shell *components* shall be designed to maintain the strength and stability of the shell to carry tensile and compressive membrane shell forces.

c. Support towers for tanks and vessels with irregular bracing, unbraced panels, asymmetric bracing, or concentrated masses shall be designed using the provisions of Sec. 5.2.3 for irregular *structures*. Support towers using chevron or eccentric braced framing shall comply with the requirements of Sec. 5. Support towers using tension only bracing shall be designed such that the full cross section of the tension element can yield during overload conditions.

d. Compression struts that resist the reaction forces from tension braces shall be designed to resist the lesser of the yield strength of the brace ($A_g F_y$), or Ω_o times the calculated tension load in the brace.

e. The vessel stiffness relative to the support system (e.g., foundation, support tower, skirt) shall be considered in determining forces in the vessel, the resisting *components* and the connections.

f. For concrete liquid-containing *structures*, system ductility and energy dissipation under unfactored loads shall not be allowed to be achieved by inelastic deformations to such a degree as to jeopardize the serviceability of the *structure*. Stiffness degradation and energy dissipation shall be allowed to be obtained either through limited microcracking, or by means of lateral-force resistance mechanisms that dissipate energy without damaging the *structure*.

14.7.3.4 Flexibility of Piping Attachments: Piping systems connected to tanks and vessels shall consider the potential movement of the connection points during earthquakes and provide sufficient flexibility to avoid release of the product by failure of the piping system. The piping system and supports shall be designed so as to not impart significant mechanical loading on the attachment to the tank or vessel shell. Local loads at piping connections shall be considered in the design of the tank or vessel shell. Mechanical devices which add flexibility such as bellows, expansion joints, and other flexible apparatus may be used when they are designed for seismic loads and displacements.

Unless otherwise calculated, the minimum *displacements* in Table 14.7.3.4 shall be assumed. For attachment points located above the support or foundation elevation, the *displacements* in Table 14.7.3.4 shall be increased to account for drift of the tank or vessel.

TABLE 14.7.3.4 Minimum Displacements for Piping Attachments

Anchored Tanks or Vessels	Displacements (inches)
Vertical *displacement* relative to support or foundation	2
Horizontal (radial and tangential) relative to support or foundation	0.5
Unanchored Tanks or Vessels (at grade)	
Vertical *displacement* relative to support or foundation	
If designed to meet approved standard.	6
If designed for seismic loads per the provisions but not covered by an approved standard	12
For tanks and vessels with a diameter <40 ft, horizontal (radial and tangential) relative to support or foundation	8

When the elastic *deformations* are calculated, the minimum design *displacements* for piping *attachments* shall be the calculated *displacements* at the point of attachment increased by the amplification factor C_d.

The values given in Table 14.7.3.4 do not include the influence of relative movements of the foundation and piping anchorage points due to foundation movements (e.g., settlement, seismic *displacements*). The effects of the foundation movements shall be included in the piping system design including the determination of the mechanical loading on the tank or vessel, and the total displacement capacity of the mechanical devices intended to add flexibility.

14.7.3.5 Anchorage: Tanks and vessels at *grade* are permitted to be designed without anchorage when they meet the requirements for unanchored tanks in approved standards. Tanks and vessels supported above *grade* on structural towers or building *structures* shall be anchored to the supporting *structure*.

The following special detailing requirements shall apply to steel tank anchor bolts in seismic regions where $S_{DS} > 0.5$ or where the *structure* is classified as *Seismic Use Group* III.

a. Hooked anchor bolts (L or J shaped embedded bolts) or other anchorage systems based solely on bond or mechanical friction shall not be used when $S_{DS} \geq 0.33$. Post-installed anchors may be used provided that testing validates their ability to develop yield load in the anchor under cyclic loads in cracked concrete.

b. When anchorage is required, the anchor embedment into the foundation shall be designed to develop the minimum specified yield strength of the anchor.

14.7.3.6 Ground-Supported Storage Tanks for Liquids:

14.7.3.6.1 General: Ground-supported, flat bottom tanks storing liquids shall be designed to resist the seismic forces calculated using one of the following procedures:

a. The base shear and overturning moment calculated as if tank and the entire contents are a rigid mass system per Sec. 14.5.2 of the *Provisions* or

b. Tanks or vessels storing liquids in *Seismic Use Group* III or with a diameter greater than 20 ft shall be designed to consider the hydrodynamic pressures of the liquid in determining the equivalent lateral forces and lateral force distribution per the approved standards listed in Table 14.3 and Sec. 14.7.3 of the *Provisions*.

c. The force and *displacement* provisions of Sec. 14.5.4 of the *Provisions*.

The design of tanks storing liquids shall consider the impulsive and convective (sloshing) effects and consequences on the tank, foundation, and attached elements. The impulsive component corresponds to the high frequency amplified response to the lateral ground motion of the tank roof, shell and portion of the contents that moves in unison with the shell. The convective component corresponds to the low frequency amplified response of the contents in the fundamental sloshing mode. Damping for the convective component shall be 0.5 percent for the sloshing liquid unless otherwise defined by the approved national standard. The following definitions shall apply:

T_c = natural period of the first (convective) mode of sloshing,

T_i = fundamental period of the tank structure and impulsive component of the content,

T_v = natural period of vertical vibration of the liquid and tank structural system,

V_i = base shear due to impulsive component from weight of tank and contents,

V_c = base shear due to the convective component of the effective sloshing mass,

The seismic base shear is the combination of the impulsive and convective components:

$$V = V_i + V_c \qquad (14.7.3.6.1)$$

where:

$$V_i = \frac{S_{ai} W_i}{R}$$

$$V_c = \frac{S_{ac} W_c}{R}$$

S_{ai} = the spectral acceleration as a multiplier of gravity including the site impulsive components at period T_i and 5 percent damping.

For $T_i < T_s$, $S_{ai} = S_{DS.}$

For $T_i > T_s$, $S_{ai} = \dfrac{S_{D1}}{T_i}$.

Note: When an approved national standard is used in which the spectral acceleration for the tank shell, and the impulsive component of the liquid is independent of T_i, then $S_{ai} = S_{DS}$ for all cases.

S_{ac} = the spectral acceleration of the sloshing liquid based on the sloshing period T_c and 0.5 percent damping.

For $T_c < 4.0$ sec, $S_{ac} = \dfrac{1.5 S_{D1}}{T_c}$

For T_c of 4.0 sec or greater, $S_{ac} = \dfrac{6 S_{D1}}{T_c^{\,2}}$

and $$T_c = 2\pi \sqrt{\frac{D}{3.68 g \tanh\left(\dfrac{3.68 H}{D}\right)}}$$

where D = the tank diameter in feet, H = liquid height (feet or meters) and g = acceleration due to gravity in consistent units.

W_i = impulsive weight (impulsive component of liquid, roof and equipment, shell, bottom, and internal components,

W_c = the portion of the liquid weight sloshing.

The general design response spectra for ground-supported liquid storage tanks is shown in Figure 14.7.3.6-1.

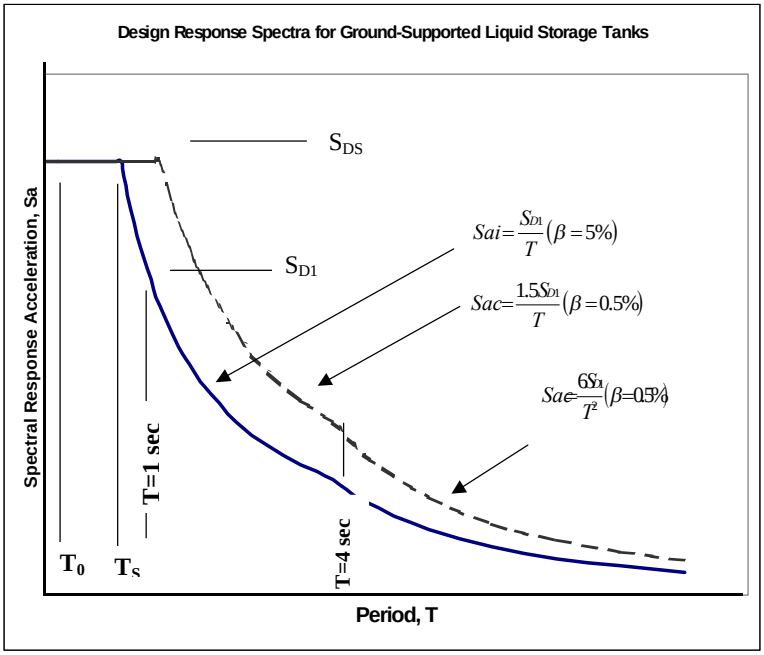

Figure 14.7.3.6-1

14.7.3.6.1.1 Distribution of Hydrodynamic and Inertia Forces: Unless otherwise required by the appropriate approved standard in Table 14.3, the method given in ACI 350.3 may be used to determine the vertical and horizontal distribution of the hydrodynamic and inertia forces on the walls of circular and rectangular tanks.

14.7.3.6.1.2 Freeboard: Sloshing of the liquid within the tank or vessel shall be considered in determining the freeboard required above the top capacity liquid level. A minimum freeboard shall be provided per Table 14.7.3.6.1.2. The height of the sloshing wave can be estimated by:

$$\delta_s = 0.5DIS_{ac} \qquad (14.7.3.6.1.2)$$

TABLE 14.7.3.6.1.2 Minimum Required Freeboard

Value of S_{DS}	Seismic Use Group		
	I	II	III
$S_{DS} < 0.167g$	a	a	δ_s^c
$0.167g \le S_{DS} < 0.33g$	a	a	δ_s^c
$0.33g \le S_{DS} < 0.50g$	a	$0.7\delta_s^b$	δ_s^c
$0.50g \le S_{DS}$	a	$0.7\delta_s^b$	δ_s^c

[a] No minimum freeboard is required.
[b] A freeboard equal to $0.7\delta_s$ is required unless one of the following alternatives is provided:
1. Secondary containment is provided to control the product spill.
2. The roof and supporting *structure* are designed to contain the sloshing liquid.

[c] Freeboard equal to the calculated wave height, δ_s, is required unless one of the following alternatives is provided:
1. Secondary containment is provided to control the product spill.
2. The roof and supporting *structure* are designed to contain the sloshing liquid.

14.7.3.6.1.3 Equipment and Attached Piping: Equipment, piping, and walkways or other appurtenances attached to the *structure* shall be designed to accommodate the *displacements* imposed by *seismic forces*. For piping *attachments*, see Sec. 14.7.3.4.

14.7.3.6.1.4 Internal Components: The *attachments* of internal equipment and accessories which are attached to the primary liquid or pressure retaining shell or bottom, or provide structural support for major *components* (e.g., a column supporting the roof rafters) shall be designed for the lateral loads due to the sloshing liquid in addition to the inertial forces. (See Wozniak and Mitchell, 1978).

14.7.3.6.1.5 Sliding Resistance: The transfer of the total lateral shear force between the tank or vessel and the subgrade shall be considered as follows:

a. For unanchored flat bottom steel tanks, the overall horizontal seismic shear force shall be resisted by friction, V_s, between the tank bottom and the foundation or subgrade. Unanchored storage tanks must be designed such that sliding will not occur when the tank is full of stored product. The maximum calculated seismic base shear, V_s, shall not exceed W tan 30° ($V_s < W$ *tan* 30°).

   V shall be determined using the effective weight of the tank, roof and contents after reduction for coincident vertical earthquake. Lower values of the friction factor should be used if the design of bottom to supporting foundation does not justify the friction value above (e.g., leak detection membrane beneath the bottom with a lower friction factor, smooth bottoms, etc).

b. No additional lateral anchorage is required for anchored steel tanks designed in accordance with approved standards.

c. The lateral shear transfer behavior for special tank configurations (e.g., shovel bottoms, highly crowned tank bottoms, tanks on grillage) can be unique and are beyond the scope of the provisions.

14.7.3.6.1.6 Local Shear Transfer: Local transfer of the shear from the *roof* to the *wall* and the *wall* of the tank into the *base* shall be considered. For cylindrical tanks and vessels, the peak local tangential shear per unit length shall be calculated by:

$$V_{\max} = \frac{2V}{\pi D} \qquad (14.7.3.6.1.6)$$

a. Tangential shear in flat bottom steel tanks shall be transferred through the welded connection to the steel bottom. This transfer mechanism is deemed acceptable for steel tanks designed in accordance with the approved standards and $S_{as} < 1.0$.

b. For concrete tanks with a sliding *base* where the lateral shear is resisted by friction between the tank *wall* and the *base*, the friction coefficient shall not exceed tan 30°.

c. In fixed-*base* or hinged-*base* concrete tanks, the total horizontal seismic *base shear* is shared by membrane (tangential) shear and radial shear into the foundation. For anchored flexible-*base* concrete tanks, the majority of the *base shear* is resisted by membrane (tangential) shear through the anchoring system with only insignificant vertical bending in the *wall*. The connection between the *wall* and floor shall be designed to resist the maximum tangential shear.

14.7.3.6.1.7 Pressure Stability: For steel tanks, the internal pressure from the stored product stiffens thin cylindrical shell structural elements subjected to membrane compression forces. This stiffening effect may be considered in resisting seismically induced compressive forces if permitted by the approved standard or the building official having jurisdiction.

14.7.3.6.1.8 Shell Support: Steel tanks resting on concrete ring *walls* or slabs shall have a uniformly supported annulus under the shell. Uniform support shall be provided by one of the following methods:

a. Shimming and grouting the annulus,

b. Using fiberboard or other suitable padding

c. Using butt-welded bottom or annular plates resting directly on the foundation,

d. Using closely spaced shims (without structural grout) provided that the localized bearing loads are considered in the tank wall and foundation to prevent local crippling and spalling.

Anchored tanks shall be shimmed and grouted. Local buckling of the steel shell for the peak compressive force due to operating loads and seismic overturning shall be considered.

14.7.3.6.1.9 Repair, Alteration ,or Reconstruction: Repairs, modifications or reconstruction (i.e., cut down and re-erect) of a tank or vessel shall conform to industry standard practice and the *Provisions*. For welded steel tanks storing liquids, see API 653 and the approved national standard in Table 14.3. Tanks that are relocated shall be re-evaluated for the seismic loads for the new site and the requirements of new construction in accordance with the appropriate approved national standard and the *Provisions*.

14.7.3.7 Water and Water Treatment Tanks and Vessels:

14.7.3.7.1 Welded Steel: Welded steel water storage tanks and vessels shall be designed in accordance with the seismic requirements of AWWA D100 except that the design input forces shall be modified as follows:

The impulsive and convective components of the base shear are defined by the following equations for allowable stress design procedures:

$$V_i = \frac{S_{DS} I}{1.4R} W_i \qquad (14.7.3.7.1)$$

For $T_s < T_c < 4.0$ sec., $V_c = \frac{S_{DS} I}{1.4RT_c} W_c$.

For T_c of 4.0 sec or greater, $V_c = \frac{6S_{DS} I}{1.4R} \frac{T_s}{T_c^2} W_c$.

a. Substitute the above parameters into AWWA D100Eq. 13-4 and 13-8. Substitute the expression $\frac{S_{DS} I}{2.5(1.4R)} \ldots for \ldots \frac{ZI}{R_w}$ and substitute the term "*B*" for the term "*S*" in these equations in AWWA D100, where S_{DS} and T_S, are defined in Sec. 4.1.2.5, R is defined in Table 14.2.1.1, $B = 1.25T_s$ when T_c is in the range $T_s < T_c \leq 4.0$ sec, $B = 1.11T_S$ when T_c is > 4.0 sec.

Thus, AWWA D100 Eq. 13-4 for base shear at the bottom of the tank shell becomes:

$$V_{ACT} = \frac{18S_{DS} I}{2.5(1.4R)} \left[0.14\left(W_s + W_r + W_f + W_1\right) + BC_1 W_2\right]$$

Alternatively,

For $Ts < Tc < 4.0$ sec, $V_{ACT} = \frac{S_{DS} I}{1.4R} \left[\left(W_s + W_r + W_f + W_1\right) + 1.5\frac{T_s}{T_c} W_2\right]$.

For $Tc > 4.0$ sec, $V_{ACT} = \frac{S_{DS} I}{1.4R} \left[\left(W_s + W_r + W_f + W_1\right) + 6\frac{T_s}{T_c^2} W_2\right]$.

Similarly, AWWA D100 Eq. 13-8 for overturning moment applied to the bottom of the tank shell in AWWA D100 becomes:

$$M = \left[\frac{18S_{DS} I}{2.5(1.4R)}\right]\left[0.14\left(W_s X_s + W_r H_t + W_1 X_1\right) + BC_1 W_2 X_2\right]$$

b. The hydrodynamic seismic hoop tensile stress is defined in AWWA D100 Eq. 13-20 through 13-25. When using these equations, make the following substitution directly into the equations:

$$\frac{S_{DS}I}{2.5(1.4R)} \ldots\ldots for \ldots\ldots \left[\frac{ZI}{R_w}\right]$$

c. Sloshing height shall be calculated per Sec 14.7.3.7.1.2 instead of (Eq 13-26) of AWWA D100.

14.7.3.7.2 Bolted Steel: Bolted steel water storage *structures* shall be designed in accordance with the seismic requirements of AWWA D103 except that the design input forces shall be modified in the same manner shown in Sec 14.7.3.8.1 of the *Provisions*.

14.7.3.7.3 Reinforced and Prestressed Concrete: Reinforced and prestressed concrete tanks shall be designed in accordance with the seismic requirements of ACI 350.3 except that the design input forces shall be modified as follows:

a. For $T_I < T_o$, and $T_I > T_s$, substitute the term $\frac{S_a I}{1.4R}$ where S_a is defined in Sec. 4.1.2.6, Subsections 1, 2, or 3 or Eq. 4.1.2.6-3, for the terms in the appropriate equations as shown below:

For $\frac{ZIC_1}{R_1}$ shear and overturning moment equations of AWWA D110 and AWWA D115.

For $\frac{ZISC_1}{R_i}$ in the base shear and overturning moment equations of ACI 350.3.

b. For $T_o \le T_I \le T_s$, substitute the term $\frac{S_{DS} I}{1.4R}$ for terms $\frac{ZIC_i}{R_1}$ and $\frac{ZISC_i}{R_i}$.

c. For all values of T_c (or T_w), $\frac{ZIC_c}{R_c}$ and $\frac{ZISC_c}{R_c}$ are replaced by

$$\frac{6S_{D1}I}{T_c^{\,2}} \ldots or \ldots \left[\frac{6S_{DS}I}{T_c^{\,2}} T_S\right]$$

Thus, for $T_o \le T_I \le T_s$, AWWA D110 Eq. 4-1 becomes $V_I = \frac{S_{DS} I}{1.4R}(W_s + W_R + W_I)$ and Eq. 4-2 becomes $V_c = \frac{6S_{DS} I}{1.4R}\left(\frac{T_s}{T_c^2}\right)W_C$ where S_a, S_{D1}, S_{DS}, T_0, and T_s are defined in Sec. 4.1.2.6 of the *Provisions.*

14.7.3.8 Petrochemical and Industrial Tanks and Vessels Storing Liquids:

14.7.3.8.1 Welded Steel: Welded steel petrochemical and industrial tanks and vessels storing liquids shall be designed in accordance with the seismic requirements of API 650 and API 620 except that the design input forces shall be modified as follows:

a. When using the equations in API 650 Sec. E.3, substitute the following into the equation for overturning moment M (where S_{DS} and T_s are defined in Sec. 4.1.2.5 of the *Provisions*). Thus,

   In the range $T_s < T_c \le 4.0$ sec, $C_2 = \frac{0.75S}{T_c} \ldots and \ldots S = 1.0$

   $$M = S_{DS} I\left[0.24(W_s X_s + W_t H_t + W_1 X_1) + 0.80 C_2 T_2 W_2 X_2\right]$$

   In the range $T_w > 4.0$ sec,

   $$M = S_{DS} I\left[0.24(W_s X_s + W_t H_t + W_1 X_1) + 0.71 C_2 T_s W_2 X_2\right] \quad \text{and}$$

   $$C_2 = \frac{3.375S}{T_c^2} \ldots and \ldots S = 1.0$$

14.7.3.8.2 Bolted Steel: For bolted steel tanks used for storage of production liquids, API 12B covers the material, design, and erection requirements for vertical, cylindrical, and aboveground bolted tanks in nominal capacities of 100 to 10,000 barrels for production service. Unless required by the authority having jurisdiction, these temporary structures need not be designed for seismic loads. If design for seismic load is required, the loads may be adjusted for the temporary nature of the anticipated service life.

14.7.3.8.3 Reinforced and Prestressed Concrete: Reinforced concrete tanks for the storage of petrochemical and industrial liquids shall be designed in accordance with the force requirements of Sec. 14.7.3.8.3.

14.7.3.9 Ground-Supported Storage Tanks for Granular Materials

14.7.3.9.1 General: The intergranular behavior of the material shall be considered in determining effective mass and load paths, including the following behaviors:

a. Increased lateral pressure (and the resulting hoop stress) due to loss of the intergranular friction of the material during the seismic shaking.

b. Increased hoop stresses generated from temperature changes in the shell after the material has been compacted.

c. Intergranular friction which can transfer seismic shear directly to the foundation.

14.7.3.9.2 Lateral Force Determination: The lateral forces for tanks and vessels storing granular materials at grade shall be determined by the requirements and accelerations for short period structures (i.e., S_{as}).

14.7.3.9.3 Force Distribution to Shell and Foundation:

14.7.3.9.3.1 Increased Lateral Pressure: The increase in lateral pressure on the tank wall shall be added to the static design lateral pressure but shall not be used in the determination of pressure stability effects on the axial buckling strength of the tank shell.

14.7.3.9.3.2 Effective Mass: A portion of a stored granular mass will acts with the shell (the effective mass). The effective mass is related to the physical characteristics of the product, the height-to-diameter (*H/D*) ratio of the tank and the intensity of the seismic event. The effective mass shall be used to determine the shear and overturning loads resisted by the tank.

14.7.3.9.3.3 Effective Density: The effective density factor (that part of the total stored mass of product which is accelerated by the seismic event) shall be determined in accordance ACI 313.

14.7.3.9.3.4 Lateral Sliding: For granular storage tanks that have a steel bottom and are supported such that friction at the bottom to foundation interface can resist lateral shear loads, no additional anchorage to prevent sliding is required. For tanks without steel bottoms (i.e., the material rests directly on the foundation), shear anchorage shall be provided to prevent sliding.

14.7.3.9.3.5 Combined Anchorage Systems: If separate anchorage systems are used to prevent overturning and sliding, the relative stiffness of the systems shall be considered in determining the load distribution.

14.7.3.9.4 Welded Steel Structures: Welded steel granular storage *structures* shall be designed for Chapter 4 of the *Provisions*. Component allowable stresses and materials shall be per AWWA D100 except the allowable circumferential membrane stresses and material requirements in API 650 shall apply.

14.7.3.9.5 Bolted Steel Structures: Bolted steel granular storage *structures* shall be designed in compliance with Chapter 4 of the *Provisions*. Component allowable stresses and materials shall be per AWWA D103.

14.7.3.9.6 Reinforced Concrete Structures: Reinforced concrete *structures* for the storage of granular materials shall be designed in accordance with the force requirements of Chapter 4 of the *Provisions* and the requirements of ACI 313.

14.7.3.9.7 Prestressed Concrete Structures: Prestressed concrete *structures* for the storage of granular materials shall be designed in accordance with the force provisions of Chapter 4 of the *Provisions* and the requirements of ACI 313.

14.7.3.10 Elevated Tanks and Vessels for Liquids and Granular Materials:

14.7.3.10.1 General: This section applies to tanks, vessels, bins, and hoppers that are elevated above *grade* where the supporting tower is an integral part of the structure or where the primary function of the tower is to support the tank or vessel. Tanks and vessels that are supported within buildings, or are incidental to the primary function of the tower are considered mechanical equipment and shall be designed in accordance with Chapter 6 of the *Provisions*.

Elevated tanks shall be designed for the force and *displacement* requirements of the applicable approved standard, or Sec 14.5.

14.7.3.10.2 Effective mass: The design of the supporting tower or pedestal, anchorage, and foundation for seismic overturning shall assume the material stored is a rigid mass acting at the volumetric center of gravity. The effects of fluid-*structure* interaction may be considered in determining the forces, effective period, and mass centroids of the system if the following requirements are met:

a. The sloshing period, T_c is greater than $3T$ where T = natural period of the tank with confined liquid (rigid mass) and supporting *structure*.

b. The sloshing mechanism (i.e., the percentage of convective mass and centroid) is determined for the specific configuration of the container by detailed fluid structure interaction analysis or testing.

Soil-*structure* interaction may be included in determining T providing the provisions of Sec 2.5 are met.

14.7.3.10.3 *P*-Delta effects: The lateral drift of the elevated tank shall be considered as follows:

a. The design drift, the elastic lateral *displacement* of the stored mass center of gravity shall be increased by the factor C_d for evaluating the additional load in the support *structure*.

b. The *base* of the tank shall be assumed to be fixed rotationally and laterally

c. Deflections due to bending, axial tension or compression shall be considered. For pedestal tanks with a height to diameter ratio less than 5, shear *deformations* of the pedestal shall be considered.

d. The *dead load* effects of roof mounted equipment or platforms shall be included in the analysis.

e. If constructed within the plumbness tolerances specified by the approved standard, initial tilt need not be considered in the *P*-delta analysis.

14.7.3.10.4 Transfer of Lateral Forces into Support Tower: For post supported tanks and vessels that are cross braced:

a. The bracing shall be installed in such a manner as to provide uniform resistance to the lateral load (e.g., pretensioning or tuning to attain equal sag).

b. The additional load in the brace due to the eccentricity between the post to tank attachment and the line of action of the bracing shall be included.

c. Eccentricity of compression strut line of action (elements that resist the tensile pull from the bracing rods in the lateral force resisting systems) with their attachment points shall be considered.

d. The connection of the post or leg with the foundation shall be designed to resist both the vertical and lateral resultant from the yield load in the bracing assuming the direction of the lateral load is oriented to produce the maximum lateral shear at the post to foundation interface. Where multiple rods are connected to the same location, the anchorage shall be designed to resist the concurrent tensile loads in the braces.

14.7.3.10.5 Evaluation of Structures Sensitive to Buckling Failure: Shell structures that support substantial loads may exhibit a primary mode of failure from localized or general buckling of the support pedestal or skirt during seismic loads. Such structures may include single pedestal water towers, skirt supported process vessels, and similar single member towers. Where the structural assessment concludes that buckling of the support is the governing primary mode of failure, structures and components in *Seismic Use Group* III shall be designed to resist the seismic forces as follows:

a. The seismic response coefficient for this evaluation shall be per Sec 5.3.2.1 of the *Provisions* with *I/R* set equal to 1.0. Soil-structure and fluid-structure interaction may be utilized in determining the structural response. Vertical or orthogonal combinations need not be considered.

b. The resistance of the structure or component shall be defined as the critical buckling resistance of the element (i.e. a factor of safety set equal to 1.0).

c. The anchorage and foundation shall be designed to resist the load determined in item a. The foundation shall be proportioned to provide a stability ratio of 1.2 for the overturning moment. The maximum toe pressure under the foundation shall not exceed the ultimate bearing capacity or the lesser of 3 times the allowable bearing capacity. All structural components and elements of the foundation shall be designed to resist the combined loads with a load factor of 1.0 on all loads, including dead load, live load and earthquake load. Anchors shall be permitted to yield.

14.7.3.10.6 Welded Steel Water Storage Structures: Welded steel elevated water storage *structures* shall be designed and detailed in accordance with the seismic requirements of AWWA D100 and the *Provisions* except that the design input forces shall be modified by substituting the following terms for $\frac{ZIC}{R_w}$ in AWWA D100 Eq.13-1 and 13-3 of and set the value for S = 1.0.

For $T < Ts$, substitute the term $\frac{S_{DS} I}{1.4R}$.

For $Ts < T < 4.0$ sec, substitute the term $\frac{S_{D1} I}{T(1.4R)}$.

For $T > 4.0$ sec, substitute the term $\dfrac{S_{D1} I}{T^2 (1.4R)}$.

14.7.3.10.6.1 Analysis Procedures: The equivalent lateral force procedure may be used. A more rigorous analysis shall be permitted. Analysis of single pedestal structures shall be based on a fixed-base, single-degree-of-freedom model. All mass, including the liquid, shall be considered rigid unless the sloshing mechanism (i.e., the percentage of convective mass and centroid) is determined for the specific configuration of the container by detailed fluid structure interaction analysis or testing. Soil-structure interaction may be included.

14.7.3.10.6.2 Structure Period: The fundamental period of vibration of the structure shall be established using the structural properties and deformational characteristics of the resisting elements in a substantiated analysis. The period used to calculate the seismic response coefficient shall not exceed 4.0 sec. See AWWA D100 for guidance on computing the fundamental period of cross braced structures.

14.7.3.10.7 Concrete Pedestal (Composite) Tanks: Concrete pedestal (composite) elevated water storage *structures* shall be designed in accordance with the requirements of ACI 371 except that the design input forces shall be modified as follows:

In ACI 371 Eq. 4-8a:

For $Ts < T < 4.0$ sec, substitute the term $\dfrac{S_{D1} I}{TR}$ for $\dfrac{1.2 C_v}{R T^{2/3}}$

For $T > 4.0$ sec, substitute the term $\dfrac{4 S_{D1} I}{T^2 R}$ for $\dfrac{1.2 C_v}{R\, T^{2/3}}$

In ACI 371 Eq. 4-8b, substitute the term $\dfrac{S_{DS} I}{R}$ for $\dfrac{2.5 C_a}{R}$

In ACI 371 Eq. 4-9, substitute the term $0.2 S_{DS}$ for $0.5 C_a$.

14.7.3.10.7.1 Analysis Procedures: The equivalent lateral force procedure may be used for all structures and shall be based on a fixed-base, single-degree-of-freedom model. All mass, including the liquid, shall be considered rigid unless the sloshing mechanism (i.e., the percentage of convective mass and centroid) is determined for the specific configuration of the container by detailed fluid structure interaction analysis or testing. Soil-structure interaction may be included. A more rigorous analysis is permitted.

14.7.3.10.7.2 Structure Period: The fundamental period of vibration of the structure shall be established using the uncracked structural properties and deformational characteristics of the resisting elements in a properly substantiated analysis. The period used to calculate the seismic response coefficient shall not exceed 2.5 sec.

14.7.3.11 Boilers and Pressure Vessels:

14.7.3.11.1 General: *Attachments* to the pressure boundary, supports, and lateral force resisting anchorage systems for boilers and pressure vessels shall be designed to meet the force and *displacement* requirements of Sec 3.1.3 and 3.1.4 and the additional requirements of this section. Boilers and pressure vessels categorized as *Seismic Use Group* II or III shall be designed to meet the force and *displacement* requirements of Sec 3.1.3 and 3.1.4.

14.7.3.11.2 ASME Boilers and Pressure Vessels: Boilers or pressure vessels designed and constructed in accordance with ASME shall be deemed to meet the requirements of this section provided that the *displacement* requirements of Sec 3.1.3 and 3.1.4 are used with appropriate scaling of the force and *displacement* requirements to the working stress design basis.

14.7.3.11.3 Attachments of Internal Equipment and Refractory: *Attachments* to the pressure boundary for internal and external ancillary *components* (e.g., refractory, cyclones, trays) shall be designed to resist the *seismic forces* in the *Provisions* to safeguard against rupture of the pressure boundary. Alternatively, the element attached may be designed to fail prior to damaging the pressure boundary provided that the consequences of the failure does not place the pressure boundary in jeopardy. For boilers or vessels containing liquids, the effect of sloshing on the internal equipment shall be considered if the equipment can damage the integrity of the pressure boundary.

14.7.3.11.4 Coupling of Vessel and Support *Structure*: Where the mass of the operating vessel or vessels supported is greater than 25 percent of the total mass of the combined *structure*, the coupling of the masses shall be considered. Coupling with adjacent, connected *structures* such as multiple towers shall be considered if the *structures* are interconnected with elements that will transfer loads from one *structure* to the other.

14.7.3.11.5 Effective Mass: Fluid-*structure* interaction (sloshing) shall be considered in determining the effective mass of the stored material providing sufficient liquid surface exists for sloshing to occur and the T_c is greater than $3T$. Changes to or variations in material density with pressure and temperature shall be considered.

14.7.3.11.6 Other Boilers and Pressure Vessels: Boilers and pressure vessels that are designated *Seismic Use Group* III but are not designed and constructed in accordance with the requirements of ASME shall meet the following requirements:

The seismic loads in combination with other service loads and appropriate environmental effects shall not exceed the material strength shown in Table 14.7.3.11.6.

TABLE 14.7.3.11.6 Maximum Material Strength

Material	Minimum Ratio F_u/F_y	Max Material Strength Vessel Material	Max Material Strength Threaded Material[a]
Ductile (e.g., steel, aluminum, copper)	1.33 [b]	90%	70%
Semi-ductile	1.2 [c]	70%	50%
Nonductile (e.g., cast iron, ceramics, fiberglass)	NA	25%	20%

[a] Threaded connection to vessel or support system.
[b] Minimum 20% elongation per the ASTM material specification.

[c] Minimum 15% elongation per the ASTM material specification.

Consideration shall be made to mitigate seismic impact loads for boiler or vessel *components* constructed of nonductile materials or vessels operated in such a way that material ductility is reduced (e.g., low temperature applications).

14.7.3.11.7 Supports and Attachments for Boilers and Pressure Vessels: *Attachments* to the pressure boundary and support for boilers and pressure vessels shall meet the following requirements:

a. *Attachments* and supports transferring seismic loads shall be constructed of ductile materials suitable for the intended application and environmental conditions.

b. Seismic anchorages embedded in concrete shall be ductile and detailed for cyclic loads.

c. Seismic supports and *attachments* to *structures* shall be designed and constructed so that the support or attachment remains ductile throughout the range of reversing seismic lateral loads and *displacements*.

d. Vessel *attachments* shall consider the potential effect on the vessel and the support for uneven vertical reactions based on variations in relative stiffness of the support members, dissimilar details, non-uniform shimming or irregular supports. Uneven distribution of lateral forces shall consider the relative distribution of the resisting elements, the behavior of the connection details, and vessel shear distribution.

The requirements of Sec.14.5 and 14.7.3.10.5 shall also be applicable to this section.

14.7.3.12 Liquid and Gas Spheres:

14.7.3.12.1 General: *Attachments* to the pressure or liquid boundary, supports, and lateral force resisting anchorage systems for liquid and gas spheres shall be designed to meet the force and *displacement* requirements of Sec 3.1.3 and 3.1.4 and the additional requirements of this section. Spheres categorized as *Seismic Use Group* II or III shall themselves be designed to meet the force and *displacement* requirements of Sec 3.1.3 and 3.1.4.

14.7.3.12.2 ASME Spheres: Spheres designed and constructed in accordance with Division VIII of ASME shall be deemed to meet the requirements of this section providing the *displacement* requirements of Sec 3.1.3 and 3.1.4 are used with appropriate scaling of the force and *displacement* requirements to the working stress design basis.

14.7.3.12.3 Attachments of Internal Equipment and Refractory: *Attachments* to the pressure or liquid boundary for internal and external ancillary *components* (e.g., refractory, cyclones, trays) shall be designed to resist the *seismic forces* in the *Provisions* to safeguard against rupture of the pressure boundary. Alternatively, the element attached to the sphere could be designed to fail prior to damaging the pressure or liquid boundary providing the consequences of the failure do not place the pressure boundary in jeopardy. For spheres containing liquids, the effect of sloshing on the internal equipment shall be considered if the equipment can damage the pressure boundary.

14.7.3.12.4 Effective Mass: Fluid-*structure* interaction (sloshing) shall be considered in determining the effective mass of the stored material providing sufficient liquid surface exists for sloshing to occur and the T_c is greater than $3T$. Changes to or variations in fluid density shall be considered.

14.7.3.12.5 Post- and Rod- Supported: For post-supported spheres that are cross braced:

a. The requirements of Sec. 14.7.3.10.4 shall also be applicable to this section.

b. The stiffening effect of (reduction in lateral drift) from pretensioning of the bracing shall be considered in determining the natural period.

c. The slenderness and local buckling of the posts shall be considered.

d. Local buckling of the sphere shell at the post attachment shall be considered.

e. For spheres storing liquids, bracing connections shall be designed and constructed to develop the minimum published yield strength of the brace. For spheres storing gas vapors only, bracing connection shall be designed for W_o times the maximum design load in the brace. Lateral bracing connections directly attached to the pressure or liquid boundary are prohibited.

14.7.3.12.6 Skirt Supported: For skirt-supported spheres, the following requirements shall apply:

a. The provisions of Sec. 14.7.3.10.5 also shall apply.

b. The local buckling of the skirt under compressive membrane forces due to axial load and bending moments shall be considered.

c. Penetration of the skirt support (e.g., manholes, piping) shall be designed and constructed to maintain the strength of the skirt without penetrations.

14.7.3.13 Refrigerated Gas Liquid Storage Tanks and Vessels:

14.7.3.13.1 General: The seismic design of the tanks and facilities for the storage of liquefied hydrocarbons and refrigerated liquids is beyond the scope of this section. The design of such tanks is addressed in part by various approved standards as listed in Table 14.3.

> **Exception:** Low pressure, welded steel storage tanks for liquefied hydrocarbon gas (e.g., LPG, butane) and refrigerated liquids (e.g., ammonia) could be designed in accordance with the requirements of Sec. 14.7.3.8 and API 620.

14.7.3.14 Horizontal, Saddle-Supported Vessels for Liquid or Vapor Storage:

14.7.3.14.1 General: Horizontal vessels supported on saddles (sometimes referred to as blimps) shall be designed to meet the force and *displacement* requirements of Sec 3.1.3 and 3.1.4.

14.7.3.14.2 Effective mass: Changes to or variations in material density shall be considered. The design of the supports, saddles, anchorage, and foundation for seismic overturning shall assume the material stored is a rigid mass acting at the volumetric center of gravity.

14.7.3.14.3 Vessel Design: Unless a more rigorous analysis is performed, vessels shall be designed as follows:

a. Horizontal vessels with a length to diameter ratio of 6 or more may be assumed to be a simply supported beam spanning between the saddles for determining the natural period of vibration and global bending moment.

b. Horizontal vessels with a length to diameter ratio of less than 6, the effects of "deep beam shear" shall be considered when determining the fundamental period and stress distribution.

c. Local bending and buckling of the vessel shell at the saddle supports due to seismic load shall be considered. The stabilizing effects of internal pressure shall not be considered to increase the buckling resistance of the vessel shell.

d. If the vessel is a combination of liquid and gas storage, the vessel and supports shall be designed both with and without gas pressure acting (assume piping has ruptured and pressure does not exist).

14.7.4 Stacks and Chimneys:

14.7.4.1 General: Stacks and chimneys are permitted to be either lined or unlined, and shall constructed from concrete, steel, or masonry.

14.7.4.2 Design Basis: Steel stacks, concrete stacks, steel chimneys, concrete chimneys, and liners shall be designed to resist seismic lateral forces determined from a substantiated analysis using approved standards. Interaction of the stack or chimney with the liners shall be considered. A minimum separation shall be provided between the liner and chimney equal to C_d times the calculated differential lateral drift.

14.7.5 Amusement Structures:

14.7.5.1 General: Amusement *structures* are permanently fixed *structures* constructed primarily for the conveyance and entertainment of people.

14.7.5.2 Design Basis: Amusement *structures* shall be designed to resist seismic lateral forces determined from a substantiated analysis using approved standards.

14.7.6 Special Hydraulic Structures:

14.7.6.1 General: Special hydraulic *structures* are *structures* that are contained inside liquid containing *structures*. These *structures* are exposed to liquids on both *wall* surfaces at the same head elevation under normal operating conditions. Special hydraulic *structures* are subjected to out of plane forces only during an earthquake when the *structure* is subjected to differential hydrodynamic fluid forces. Examples of special hydraulic *structures* include separation *walls*, baffle *walls*, weirs, and other similar *structures*.

14.7.6.2 Design Basis: Special hydraulic *structures* shall be designed for out-of-phase movement of the fluid. Unbalanced forces from the motion of the liquid must be applied simultaneously "in front of" and "behind" these elements.

Structures subject to hydrodynamic pressures induced by earthquakes shall be designed for rigid body and sloshing liquid forces and their own inertia force. The height of sloshing shall be determined and compared to the freeboard height of the *structure*.

Interior elements, such as baffles or roof supports, also shall be designed for the effects of unbalanced forces and sloshing.

14.7.7 Secondary Containment Systems:

14.7.7.1 General: Secondary containment systems such as impoundment dikes and walls shall meet the requirements of the applicable standards for tanks and vessels and the authority having jurisdiction.

Secondary containment systems shall be designed to withstand the effects of a *maximum considered earthquake* when empty and a *maximum considered earthquake* when full including all hydrodynamic forces.

14.7.7.2 Freeboard: Sloshing of the liquid within the secondary containment area shall be considered in determining the height of the impound. A minimum freeboard Sec 14.7.3.6.1.2, δ_s, shall be provided when:

$$\delta_s = 0.50 D S_{ac} \qquad (14.7.7.2)$$

where S_{ac} is determined per Sec. 14.7.3.6.1. For circular impoundment dikes, D shall be the diameter of the impoundment. For rectangular impoundment dikes, D shall be the longer longitudinal plan dimension.

Appendix to Chapter 14

ELECTRICAL TRANSMISSION, SUBSTATION, AND DISTRIBUTION STRUCTURES

PREFACE: This appendix is a resource document for future voluntary standards and model code development. The BSSC's Technical Subcommittee 13, Nonbuilding Structures has determined that this appendix material represents the current industry design practice for these types of *nonbuilding structures*.

These sections are included here so that the design community can gain familiarity with the concepts, update standards, and send comments on this appendix to the BSSC. It is hoped that the various consensus design standards will be updated to include the design and construction methodology presented in this appendix.

14A.1 REFERENCES:

IEEE 693 Institute of Electrical and Electronics Engineers (IEEE), *Recommended Practices for Seismic Design of Substations*, Power Engineering Society, Piscataway, New Jersey, 1997

14A.2 ELECTRICAL TRANSMISSION, SUBSTATION, AND DISTRIBUTION STRUCTURES:

14A.2.1 General: This section applies to electrical transmission, substation, and distribution *structures*.

Table 14A.2.1 Seismic Coefficients for Nonbuilding Structures

Nonbuilding Structure Type	R	Ω_0	C_d	Structural System and Height Limits (ft)[c]			
				Seismic Design Category			
				A & B	C	D	E & F
Electrical transmission towers, substation wire support *structures*, distribution *structures*							
Truss: Steel and aluminum	3	1-1/2	3	NL	NL	NL	NL

Nonbuilding Structure Type		R	Ω_0	C_d	Structural System and Height Limits (ft)[c]			
					Seismic Design Category			
					A & B	C	D	E & F
Pole:	Steel	1-1/2	1-1/2	1-1/2	NL	NL	NL	NL
	Wood	1-1/2	1-1/2	1-1/2	NL	NL	NL	NL
	Concrete	1-1/2	1-1/2	1-1/2	NL	NL	NL	NL
Frame:	Steel	3	1-1/2	1-1/2	NL	NL	NL	NL
	Wood	2-1/2	1-1/2	1-1/2	NL	NL	NL	NL
	Concrete	2	1-1/2	1-1/2	NL	NL	NL	NL
Telecommunication towers								
Truss:	Steel	3	1-1/2	3	NL	NL	NL	NL
Pole:	Steel	1-1/2	1-1/2	1-1/2	NL	NL	NL	NL
	Wood	1-1/2	1-1/2	1-1/2	NL	NL	NL	NL
	Concrete	1-1/2	1-1/2	1-1/2	NL	NL	NL	NL
Frame:	Steel	3	1-1/2	1-1/2	NL	NL	NL	NL
	Wood	2-1/2	1-1/2	1-1/2	NL	NL	NL	NL
	Concrete	2	1-1/2	1-1/2	NL	NL	NL	NL

14A.2.2 Design Basis: Electrical transmission, substation, wire support, and distribution *structures* shall be designed to resist a minimum seismic lateral load determined from the following formula:

$$V = \frac{C_s}{\left(\frac{R}{I}\right)} W$$

where:

V = seismic *base shear*;

I = importance factor, $I = 1.0$;

W = total *dead load* (does not include the supported wire or ice and snow loads applied to the tower);

R = response modification factor, Table 14A.2.1.1;

C_s = *seismic response coefficient* – S_{DS} but not greater then S_{D1}/T where S_{DS} and S_{D1} are as defined in Sec.1.4.2.2; and

T = The fundamental period of the tower.

A simplified static analysis and applying the seismic *base shear* (times a load factor of 1.0) at the center of mass of the *structure* can be used to determine if seismic load controls the design. The lateral force shall be evaluated in both the longitudinal and transverse directions to the support wire. When it is determined that seismic loads are significant (control the design of main load carrying members), a more detailed lateral force distribution shall be performed per Sec. 14.2.1 (with $k = 1$) of the *Provisions* and/or a modal analysis as specified by Sec. A.1.5 of IEEE 693.

Seismic lateral loads and design criteria for substation *equipment support structures* shall be in accordance with the requirements of IEEE 693. The design, manufacture, and inspection shall be in accordance with the quality control and quality assurance requirements of the industry design standards and recommended practices specified in Sec. 14.1.9.

14A.3 TELECOMMUNICATION TOWERS:

14A.3.1 General: This section applies to telecommunication towers.

14A.3.2 Design Basis: Self-supporting telecommunication towers shall be designed to resist a minimum seismic lateral force determined from the following formula:

$$V = \frac{C_s}{\left(\frac{R}{I}\right)} W \qquad (14A.5.2)$$

where:

V = seismic *base shear*;

I = importance factor, Table 14.2.1.2;

W = total *dead load* (including all *attachments*);

R = response modification factor, Table 14A.2.1.1; and

C_s = *seismic response coefficient* – S_{DS} but not greater then S_{D1}/T where S_{D1} and S_{DS}, are as defined in Sec. 4.2.2 and T is the fundamental period of the tower

A simplified static analysis applying the lateral load (times a load factor of 1.0) at the center of mass of the tower can be used to determine if seismic load controls the design of self-supporting towers. When it is determined that seismic loads are significant (control the design of main load carrying members), a more detailed lateral force distribution (with $k = 1$) and analysis shall be performed per Sec. 14.2.1 of the *Provisions*.

The lateral force applied to a telecommunication tower supported on a structure should account for the *base* motion input amplification as a result of the building earthquake response (see Sec. 14.1.2 of the *Provisions*). Guyed towers require a more detailed computer analysis including nonlinear analysis and guy-tower interaction effects. An industry accepted modal analysis procedure should be used for guyed towers.

The design, manufacture, and inspection shall be in accordance with the quality control and quality assurance requirements of the industry design standards and recommended practices specified in Sec. 14.1.9.

14A.4 BURIED STRUCTURES:

14A.4.1 General: Buried *structures* are subgrade *structures* such as tanks, tunnels, and pipes. Buried *structures* that are designated as *Seismic Use Group* II or III or are of such a size or length to warrant special seismic design as determined by the registered design professional shall be identified in the geotechnical report.

14A.4.2 Design Basis: Buried *structures* shall be designed to resist minimum seismic lateral forces determined from a substantiated analysis using approved procedures. Flexible couplings shall be provided for buried *structures* requiring special seismic considerations where changes in the support system, configuration, or soil condition occur.

14A.5 PERFORMANCE CRITERIA FOR TANKS AND VESSELS: Tanks and vessels shall be designed to meet the following minimum post-earthquake performance criteria. These criteria depend on the Seismic Use Group (category) classification and content-related hazards of the tanks and vessels being considered:

TABLE 14A.5 Performance Criteria for Tanks and Vessels

Performance Category[a]	Minimum Post-Earthquake Performance
I[b]	The structure shall be permitted to fail provided the resulting spill does not pose a threat to the public or to adjoining Category I, II or III structures.
II	The structure shall be permitted to sustain localized damage, including minor leaks, provided (a) such damage remains localized and does not propagate; and (b) the resulting leakage does not pose a threat to the public or to adjoining Category I, II or III structures.
III	The structure shall be permitted to sustain minor damage, and its operational systems or components (valves and controls) shall be permitted to become inoperative, provided that (a) the structure retains its ability to contain 100% of its contents; and (b) the structure's minor damage, and the failure of its operational systems or components, are not accompanied by, or lead to, leakage.
IV	The structure shall be permitted to sustain minor damage provided that (a) it shall retain its ability to contain 100% of its contents without leakage; and (b) its operational systems or components shall remain fully operational.

[a] Performance Categories I, II, and III correspond to the Seismic Use Groups defined in Sec. 1.3 and tabulated in Tables 14.2.1.2 and 14.7.3.7.1.2.

[b] For tanks and vessels in Performance Category IV, an Importance Factor I = 1.0 shall be used.

Appendix A

DIFFERENCES BETWEEN THE 1997 AND THE 2000 EDITIONS OF THE *NEHRP RECOMMENDED PROVISIONS*

EDITORIAL AND ORGANIZATIONAL CHANGES

For the 2000 *Provisions*, an editorial change has been made to the format used to cite reference documents. In the past, reference documents generally were listed at the beginning of a chapter and identified as Ref. X-1, Ref. X-2, etc., with the "X" being the chapter number. The references then were cited in the chapter using the "Ref. X-1" format. In the 2000 *Provisions*, the reference documents continue to be listed at the beginning of a chapter with an indication of the edition to be used but are presented with an abbreviated designation that is used to cite the reference in the text of the chapter (e.g., ACI 318).

2000 CHAPTER 1, GENERAL PROVISIONS

In the 1997 *Provisions*, one-and two-story wood frame dwellings were exempted from the seismic requirements if the design spectral response acceleration at short periods was less than 0.4g. For the 2000 *Provisions*, these dwellings are exempted from all *Provisions* requirements if they are in Seismic Design Categories A, B, or C. They also are exempted from the remaining requirements in the *Provisions* if they are designed and constructed in accordance with the conventional light frame construction requirements in Sec. 12.5.

In Sec.1.2.4, alterations that increase the *seismic force* in any existing structural element by more then 5 percent or decrease the design strength of any existing structural element to resist seismic forces by more than 5 percent are not permitted unless the entire seismic-force-resisting system is determined to conform to the *Provisions* for a new structure. All alterations are required to conform to the *Provisions* for a new structure. Excepted from these requirements are alterations to existing structural elements or additions of new structural elements that are not required by the *Provisions* but are initiated to increase the strength or stiffness of the seismic-force-resisting system of an existing structure provided an engineering analysis meeting several specifically stated requirements is submitted.

2000 CHAPTER 2, GLOSSARY AND NOTATIONS

Additions and deletions have been made to reflect changes made in the text of the *Provisions*.

2000 CHAPTER 3, QUALITY ASSURANCE

For the 2000 *Provisions*, several inspection-related changes have been made. One is a requirement for periodic inspection of shear walls with structural wood and the second requires

periodic special inspection of architectural components (glass). The special inspection requirements also have been modified to exempt nonbearing metal stud and gypsum board partitions from periodic special inspection; however, interior and exterior veneers are now covered with exceptions pertaining to lightweight partitions.

Sec. 3.6, Reporting and Compliance Procedures, also has been modified to more clearly state who is to receive reports.

2000 CHAPTER 4, GROUND MOTION

The only substantive changes made for the 2000 *Provisions* relate to the exception in Sec. 4.1.2.1 indicating that, under certain conditions, no site-specific evaluation is required for structures having a fundamental period of less than 0.5 second. This is further clarified in exceptions presented in the footnotes to Tables 4.1.2.4a and 4.1.2b.

2000 CHAPTER 5, STRUCTURAL DESIGN CRITERIA

For the 2000 *Provisions*, the requirements regulating the types of analysis that may be used in determining design seismic forces and drifts have been reformatted so that they all appear in a single table. In addition, two new analysis methods – linear time history analysis and nonlinear time history analysis – are introduced into the text of Chapter 5 and a third analysis method – nonlinear static analysis (pushover analysis) – is introduced as an appendix.

The approximate period formulae used to obtain T_a has been revised to reflect the expanded data base of the measured period of buildings obtained from strong ground motion recordings.

Equation 5.2.1-3 for determining the equivalent lateral force base shear also has been revised to change the equation's dependence on S_{D1} to dependence on S_{DS}. This was done to maintain consistency with parallel provisions in the 2000 *International Building Code*, 1997 *Uniform Building Code*, and ASCE 7-98. The requirements also were modified to clarify that the base shear need not be limited by Eq. 5.2.1-3 when used to evaluate drift. This was the intent when Eq. 5.2.1-3 was originally introduced in the 1997 *Provisions* but was not properly specified.

A change has been made to clarify that collectors in certain irregular buildings need not be designed for 125 percent of the forces otherwise required if other provisions require design of these elements for the special load combinations of Sec. 5.2.7.1.

Another change clarifies that when calculating the redundancy coefficient, ρ, for structures of light frame construction, the quantity $10/l_w$ need not be taken as having a value greater than 1. This was the original intent of the requirement when it was introduced in the 1997 *Provisions* but was not adequately presented in the text.

2000 CHAPTER 6, ARCHITECTURAL, MECHANICAL, AND ELECTRICAL COMPONENTS

For the 2000 *Provisions*, it was determined that additional conservatism was needed and a number of the component modification factor values in Tables 6.2.2 and 6.3.2 have been modified.

Simplified formulae are provided for use with the equivalent lateral force procedure of Sec. 5.4 and exceptions concerning mechanical and electrical components in Seismic Design Categories D, E, and F are clarified.

The relationship between the component transfer of forces and the basic design of the structure also has been clarified so that the design engineer must take into account the forces on the structure generated by the components fixed to the structure.

One of the most significant changes for the 2000 edition of the *Provisions* is the addition of a new section on glass in glazed curtain walls, glazed storefronts, and glazed partitions. The *Provisions* text provides basic requirements concerning drift limits and the *Commentary* contains a detailed study and review of research performed on racking tests.

Commentary Sec. 6.1.6 has been revised to ensure that the user understands what is required concerning chemical anchors.

2000 CHAPTER 7, FOUNDATION DESIGN REQUIREMENTS

Several changes to the sections on soil-structure interaction (SSI) have been made for the 2000 *Provisions*. Recent studies dictated that these changes be made because they significantly affect the period lengthening and foundation damping for a given structure and, hence, a change in base shear.

Both Sec. 7.4 and 7.5 have been modified either to meet the requirements of ACI 318-99 or to highlight exceptions to ACI 318-99.

The steel pile cap tensile force requirement has been adjusted with an exception, and width-thickness ratios have been added to ensure that the formation of plastic hinges in the piles will result without premature local buckling and fracture.

The *Commentary* has been expanded to provide additional guidance on the subject of seismic earth pressures on retaining walls including the addition of more formulations for estimating the seismic earth pressure for dry (nonsubmerged) backfills behind yielding and nonyielding retaining walls. The approach of designing yielding walls based on tolerable displacements also is discussed and key references are provided. Soil-structure interaction implications for seismic earth pressures on nonyielding retaining walls also are discussed and references given for detailed analysis methods. Further, the effects of backfill submergence on seismic earth pressures are discussed and key references cited.

2000 CHAPTER 8, STEEL STRUCTURE DESIGN REQUIREMENTS

The most significant change for the 2000 *Provisions* is the reference to AISC Seismic including Supplement No. 2. Completion of the 2000 *Provisions* update was deliberately delayed so that the results of the SAC Joint Venture program could be integrated via reference to this document. However, some modifications to AISC Seismic are included to, among other things, modify the Charpy V-notch toughness at two temperatures in order to ensure adequate toughness over the range of expected use and to reflect the SAC results indicating that, in reducing seismic hazards in moment resisting steel frames, the shape and size of the weld access hole are critical to the performance moment connections with direct welds of beam flanges to columns. The access hole configuration provided in the 2000 *Provisions* was developed to minimize strain concentrations and has been successfully tested. It is anticipated that this configuration will be adopted into later editions of the AISC specifications.

2000 CHAPTER 9, CONCRETE STRUCTURE DESIGN REQUIREMENTS

The primary modifications for the 2000 *Provisions* reflect the changes made in the 1999 edition of the ACI 318 reference document.

The seismic strength design load combination of the *International Building Code* (adopted from ASCE 7-95) in which the gravity and earthquake effects are counteractive – the load combination that governs the seismic design of reinforced concrete columns and shear walls – is essentially identical to the corresponding design load combination of ACI 318. Thus, there is no basis for the use of ϕ factors with this load combination and this requirement has been eliminated.

ACI 318-99 has revised its terminology for moment frames to be consistent with the *Provisions*; therefore, the provisions describing types of moment frames have been eliminated and references to these requirements have been deleted as well.

A new section on anchoring to concrete is included to reflect work done by ACI on the design of anchoring with cast-in-place headed bolts, J- and L- bolts headed studs, hooked bolts, and post-installed mechanical anchors. Although these requirements are not included in ACI-318-99 because the anchor prequalification standard, ACI 355.2, was not completed in time, the inclusion of comprehensive anchoring design methods in the 2000 *Provisions* was deemed important and it is anticipated that these requirements will eventually be included in ACI 318.

The requirements concerning foundations, gravity columns, and transverse reinforcement have all been modified to comply with ACI 318-99.

Finally, there has been a major expansion of the requirements found in Sec.9.1.1. Recent advances in understanding of the seismic behavior of precast/prestressed concrete frame and wall structures resulting from various research programs and the codification of test procedures have made possible the elimination of 1997 *Provisions* appendix and the inclusion in the 2000 *Provisions* of precast/prestressed concrete requirements based entirely on amendments to ACI 318-99. These are now sequentially listed to conform with Chapter 21 of ACI 318-99.

A new appendix to the *Provisions* and *Commentary* presenting requirements for untopped diaphragms is included.

2000 CHAPTER 10, STEEL AND CONCRETE STRUCTURE DESIGN REQUIREMENTS

The only change for the 2000 *Provisions* is the updating of the reference list to reflect the most current documents.

2000 CHAPTER 11, MASONRY STRUCTURE DESIGN REQUIREMENTS

The 2000 *Provisions* reflects several editorial changes. The scope section now requires that masonry walls be designed as shear walls with one exception. New requirements regarding reinforcing bars are included: lab splices are detailed to reflect new research that eliminates the confusion between splices found in masonry versus concrete, more rational and reliable design requirements for large and small reinforcement diameters are presented, the requirement for 135 degree hooks have been eliminated in masonry construction, and the requirement for end bearing splices has been eliminated since they are seldom used.

The translation from stress design to strength design found in the 1997 *Provisions* for plain (unreinforced) masonry members was not correct and modifications have been made. In addition, the 1997 Appendix to Chapter 11 has been eliminated to achieve parity with other material chapters that base their design on strength versus stress design.

A limitation on the width of the stress block in out-of-plane and in-plane bending has been included. Welded splices are specified to use ASTM A706 reinforcement to ensure the proper chemistry in the weld (i.e., the amount of carbon, sulfur, phosphorus, and other elements must be controlled).

The requirements for mechanical connections have been modified to reflect in fact that their specified yield strength is usually higher than the 125 percent specified in the 1997 *Provision*s. Consequently, the 125 percent requirement has been eliminated and Type 1 or 2 mechanical splices are required.

2000 CHAPTER 12, WOOD STRUCTURE DESIGN REQUIREMENTS

A major change for the 2000 *Provisions* is the elimination in Tables 12.4.3-2a and 12.4.3-2b of the 10 percent reduction of design values imposed on shear walls in the 1997 *Provisions*. This essentially brings these values back to the levels found in the 1994 *Provisions*. These tables also feature changes regarding minimum penetration of nailing. Earlier, thinner side panel members required the same penetration as thicker members, but testing has shown that less penetration is necessary for the conventional siding thickness used in construction. The footnote regarding the specific gravity adjustment factor also now requires that it not be greater than 1.0.

The definition of diaphragm has been changed to include sloping roofs; therefore, they now are considered to be diaphragms rather than shear walls and the requirement for edge blocking is eliminated.

A major reformatting of Sec. 12.3 and 12.4 clarifies the requirements for engineered wood construction and diaphragms and shear walls. Once this was completed, it permitted additional changes to be incorporated to improve clarity.

Another major change is the inclusion of new requirements for perforated shear walls. The perforated shear wall design presented in the 2000 *Provisions* is a recently developed empirical method that recognizes the strength and stiffness provided to framed walls by sheathing above and below wall openings. The Chapter 12 *Commentary* provides background on development and verification.

2000 CHAPTER 13, SEISMICALLY ISOLATED STRUCTURES DESIGN REQUIREMENTS

Sec. 13.2.3 has been revised for the 2000 *Provisions* to correct an oversight concerning the importance factor, which is intended to reduce ductility demand for conventional structures but does not apply in the case of seismically isolated structures that are designed to remain "essentially elastic."

Sec. 13.4.4.1 has been revised to reflect that Site Class E is now covered by the seismic maps and appropriate changes are included in the *Commentary* as well. Sec. 13.6.2.3 has been revised to provide additional wording to clarify the intent of the *Provisions*. Further, Sec.13.9.2.1 has been revised to allow the prototype bearings used for testing to be used in the construction of the structure if the registered design professional will permit their use; this may have a significant impact on smaller projects where the number of test isolators represents a significant number of the total to be used.

The most significant change is the replacement of the brief 1997 Appendix to Chapter 13 with an extensive appendix with a complete set of design provisions for structures with damping systems. Since this information contains design criteria, analysis methods, and testing recommendations that have limited history of use, considerable information on this evolving technology is included to guide the building professional.

2000 CHAPTER 14, NONBUILDING STRUCTURE DESIGN REQUIREMENTS

Since Chapter 14 is intended to provide a bridge from the basic seismic design methodologies contained in the *Provisions* to nonbuilding structure design practices, the reference documents have been updated.

Given the evolving nature of Chapter 14, the 2000 *Provisions* requirements for tanks and vessels have been moved from the Appendix to Chapter 14 into the chapter itself as a result of changes in voluntary standards and other research.

Sections on electrical transmission, substation, and distribution structures that were included in the 1997 *Provisions* text have been moved to the appendix since these lifelines systems generally do not fall under the jurisdiction of the code official. Other sections on telecommunication towers and buried structures also have been moved to the appendix because additional time is needed by the respective industries to evaluate the requirements presented. The *Commentary* sections on buried structures, pipe racks, earth retaining structures, and steel storage racks have been expanded as has the *Provisions* section on steel storage racks.

The importance factors and Seismic Use Group classifications in Chapter 14 have been revised to be consistent with *Provisions* Sec. 1.3; consequently, there are similar changes in the *Commentary* where the four examples in Table 14.2.1.2 have been modified to clarify the use of these factors.

CHANGES IN SECTION NUMBERS BETWEEN THE 1997 AND 2000 EDITIONS *PROVISIONS*

Chapter 1, GENERAL PROVISIONS

1.1 PURPOSE
1.2 SCOPE AND APPLICATION
1.2.1 Scope
1.2.2 Additions
1.2.3 Change of Use
1.2.4 Alterations
1.2.5 Alternate Materials and Alternate Means and Methods of Construction
1.3 SEISMIC USE GROUPS
1.3.1 Seismic Use Group III
1.3.2 Seismic Use Group II
1.3.3 Seismic Use Group I
1.3.4 Multiple Use
1.3.5 Seismic Use Group III Structure Access Protection
1.4 OCCUPANCY IMPORTANCE FACTOR

Chapter 2, GLOSSARY AND NOTATIONS

2.1 GLOSSARY
2.2 NOTATIONS

Chapter 3 , QUALITY ASSURANCE

3.1 SCOPE
3.2 QUALITY ASSURANCE
3.2.1 Details of Quality Assurance Plan
3.2.2 Contractor Responsibility

3.3 SPECIAL INSPECTION
3.3.1 Piers, Piles, Caissons
3.3.2 Reinforcing Steel
3.3.3 Structural Concrete
3.3.4 Prestressed Concrete
3.3.5 Structural Masonry
3.3.6 Structural Steel
3.3.7 Structural Wood
3.3.8 Cold–Formed Steel Framing
3.3.9 Architectural Components
3.3.10 Mechanical and Electrical Components
3.3.11 Seismic Isolation System
3.4 TESTING
3.4.1 Reinforcing and Prestressing Steel
3.4.2 Structural Concrete
3.4.3 Structural Masonry
3.4.4 Structural Steel
3.4.5 Mechanical and Electrical Equipment
3.4.6 Seismically Isolated Structures
3.5 STRUCTURAL OBSERVATIONS
3.6 REPORTING AND COMPLIANCE PROCEDURES

Chapter 4, GROUND MOTION

4.1 PROCEDURES FOR DETERMINING MAXIMUM CONSIDERED EARTHQUAKE AND DESIGN EARTHQUAKE GROUND MOTION ACCELERATIONS AND RESPONSE SPECTRA
4.1.1 Maximum Considered Earthquake Ground Motions
4.1.2 General Procedure for Determining Maximum Considered Earthquake and Design Spectral Response Accelerations
4.1.3 Site-Specific Procedure for Determining Ground Motion Accelerations
4.2 SEISMIC DESIGN CATEGORY
4.2.1 Determination of Seismic Design Category
4.2.2 Site Limitation for Seismic Design Categories E and F

Chapter 5, STRUCTURAL DESIGN CRITERIA

5.1 REFERENCE DOCUMENT
ASCE 7
5.2 DESIGN BASIS
5.2.1 General
5.2.2 Basic Seismic-Force-Resisting Systems
5.2.3 Structure Configuration
5.2.4 Redundancy
5.2.5 Analysis Procedures

5.2.6 Design and Detailing Requirements~~, and Structural Component Load Effects~~
5.2.7 Combination of Load Effects
5.2.8 Deflection and Drift Limits
5.3 INDEX FORCE ANALYSIS PROCEDURE
5.~~3~~ 4 EQUIVALENT LATERAL FORCE PROCEDURE64
~~5.3.1 General~~
5.4.1 ~~5.3.2~~ Seismic Base Shear
5.4.2 ~~5.3.3~~ Period Determination
5.4.3 ~~5.3.4~~ Vertical Distribution of Seismic Forces
5.4.4 ~~5.3.5~~ Horizontal Shear Distribution
5.4.5 ~~5.3.6~~ Overturning
5.4.6 ~~5.3.7~~ Drift Determination and *P*-Delta Effects
5.5 ~~5.4~~ MODAL ANALYSIS PROCEDURE
~~5.4.1 General~~
5.5.1 ~~5.4.2~~ Modeling
5.5.2 ~~5.4.3~~ Modes
5.5.3 ~~5.4.4~~ Modal Properties
5.5.4 ~~5.4.5~~ Modal Base Shear
5.5.5 ~~5.4.6~~ Modal Forces, Deflections, and Drifts
5.5.6 ~~5.4.7~~ Modal Story Shears and Moments
5.5.7 ~~5.4.8~~ Design Values
5.5.8 ~~5.4.9~~ Horizontal Shear Distribution
5.5.9 ~~5.4.10~~ Foundation Overturning
5.5.10 ~~5.4.11~~ P-Delta Effects
5.6 LINEAR RESPONSE HISTORY ANALYSIS PROCEDURE
5.6.1 Modeling
5.6.2 Ground Motion
5.6.3 Response Parameters
5.7 NONLINEAR RESPONSE HISTORY ANALYSIS PROCEDURE
5.7.1 Modeling
5.7.2 Ground Motion and Other Loading
5.7.3 Response Parameters
5.7.4 Design Review
5.8 ~~5.4~~ SOIL-STRUCTURE INTERACTION EFFECTS
5.8 ~~5.4~~.1 General
5.8 ~~5.4~~.2 Equivalent Lateral Force Procedure
5.8 ~~5.4~~.3 Modal Analysis Procedure

Appendix to Chapter 5, NONLINEAR STATIC ANALYSIS

Chapter 6, ARCHITECTURAL, MECHANICAL, AND ELECTRICAL COMPONENTS DESIGN REQUIREMENTS

6.1 GENERAL
6.1.1 References and Standards

ASME A17.1
ASTM C635
ASME/BPV
ASTM C636
ANSI/ASME B31.1
ANSI/ASME B31.3
ANSI/ASME B31.4
ANSI/ASME B31.5
ANSI/ASME B31.9
ANSI/ASME B31.11
ANSI/ASME B31.8
NFPA 13
IEEE 344
ASHRAE SRD
CISCA Recs for Zones 0-2
CISCA Recs for Zones 3-4
SMACNA HVAC
SMACNA Rectangular
SMACNA Restraint
AAMA 501.4

6.1.2 Component Force Transfer
6.1.3 Seismic Forces
6.1.4 Seismic Relative Displacements
6.1.5 Component Importance Factor
6.1.6 Component Anchorage
6.1.7 Construction Documents
6.2 ARCHITECTURAL COMPONENT DESIGN
6.2.1 General
6.2.2 Architectural Component Forces and Displacements
6.2.3 Architectural Component Deformation
6.2.4 Exterior Nonstructural Wall Elements and Connections
6.2.5 Out-of-Plane Bending
6.2.6 Suspended Ceilings
6.2.7 Access Floors
6.2.8 Partitions
6.2.9 Steel Storage Racks
6.2.10 Glass in Glazed Curtain Walls, Glazed Storefronts, and Glazed Partitions
6.3 MECHANICAL AND ELECTRICAL COMPONENT DESIGN
6.3.1 General
6.3.2 Mechanical and Electrical Component Forces and Displacements
6.3.3 Mechanical and Electrical Component Period
6.3.4 Mechanical and Electrical Component Attachments
6.3.5 Component Supports
6.3.6 Component Certification
6.3.7 Utility and Service Lines at Structure Interfaces

6.3.8 Site-Specific Considerations
6.3.9 Storage Tanks
6.3.10 HVAC Ductwork
6.3.11 Piping Systems
6.3.12 Boilers and Pressure Vessels
6.3.13 Mechanical Equipment Attachments, and Supports
6.3.14 Electrical Equipment Attachments, and Supports
6.3.15 Alternat~~ive~~ Seismic Qualification Methods
6.3.16 Elevator Design Requirements

Chapter 7, FOUNDATION DESIGN REQUIREMENTS

7.1 GENERAL
7.2 STRENGTH OF COMPONENTS AND FOUNDATIONS
7.2.1 Structural Materials
7.2.2 Soil Capacities
7.3 SEISMIC DESIGN CATEGORIES A AND B
7.4 SEISMIC DESIGN CATEGORY C
7.4.1 Investigation
7.4.2 Pole-Type Structures
7.4.3 Foundation Ties
7.4.4 Special Pile Requirements
7.5 SEISMIC DESIGN CATEGORIES D, E, AND F
7.5.1 Investigation
7.5.2 Foundation Ties
7.5.3 Liquefaction Potential and Soil Strength Loss
7.5.4 Special Pile and Grade Beam Requirements

Chapter 8, STEEL STRUCTURE DESIGN REQUIREMENTS

8.1 REFERENCE DOCUMENTS
AISC LRFD
AISC ASD
AISC Seismic
AISI
ANSI/ASCE 8-90
SJI
ASCE 19
8.2 SEISMIC REQUIREMENTS FOR STEEL STRUCTURES
8.3 SEISMIC DESIGN CATEGORIES A, B, AND C
8.4 SEISMIC DESIGN CATEGORIES D, E, AND F
8.4.1 Modifications to AISC Seismic
8.5 COLD-FORMED STEEL SEISMIC REQUIREMENTS
8.5.1 Modifications to AISI ~~Ref. 8.4~~
8.5.2 Modifications to ANSI/ASCE 8-90 ~~Ref. 8.5~~

8.6 LIGHT-FRAMED WALLS
8.6.1 Boundary Members
8.6.2 Connections
8.6.3 Braced Bay Members
8.6.4 Diagonal Braces
8.6.5 Shear Walls
8.7 SEISMIC REQUIREMENTS FOR STEEL DECK DIAPHRAGMS
8.8 STEEL CABLES

Chapter 9, CONCRETE STRUCTURE DESIGN REQUIREMENTS

9.1 REFERENCE DOCUMENTS
ACI 318
ACI ITG/T1.1
ASME B1.1
ASME B18.2.1
ASME B18.2.6.9
ATC 24
9.1.1 Modifications to ACI 318 ~~Ref. 9-1~~
9.2 ANCHORING TO CONCRETE
9.2.1 Scope
9.2.2 Notations and Definitions
9.2.3 General Requirements
9.2.4 General Requirements for Strength of Structural Anchors
9.2.5 Design Requirements for Tensile Loading
9.2.6 Design Requirements for Shear Loading
9.2.7 Interaction of Tensile and Shear Forces
9.2.8 Required Edge Distances, Spacings, and Thicknesses to Preclude Splitting Failure
9.2.9 Installation of Anchors
~~9.2 BOLTS AND HEADED STUD ANCHORS IN CONCRETE~~
~~9.2.1 Load Factor Multipliers~~
~~9.2.2 Strength of Anchors~~
~~9.2.3 Strength Based on Tests~~
~~9.2.4 Strength Based on Calculations~~
~~9.3 CLASSIFICATION OF SEISMIC-FORCE-RESISTING SYSTEMS~~
~~9.3.1 Classification of Moment Frames~~
~~9.3.2 Classification of Shear Walls~~
9.3 CLASSIFICATION OF SHEAR WALLS
9.3.1 Ordinary Plain Concrete Shear Walls
9.3.2 Detailed Plain Concrete Shear Walls
9.4 SEISMIC DESIGN CATEGORY A
9.5 SEISMIC DESIGN CATEGORY B
9.5.1 Ordinary Moment Frames
9.6 SEISMIC DESIGN CATEGORY C
9.6.1 Seismic-Force-Resisting Systems

9.6.2 Discontinuous Members
9.6.3 Plain Concrete
9.6.4 Anchor Bolts in the Tops of Columns
9.7 SEISMIC DESIGN CATEGORIES D, E, OR F
9.7.1 Seismic-Force-Resisting Systems
9.7.2 Frame Members Not Proportioned to Resist Forces Induced by Earthquake Motions
~~9.7.3 Plain Concrete~~

Appendix to Chapter 9, REINFORCED CONCRETE DIAPHRAGMS CONSTRUCTED USING UNTOPPED PRECAST CONCRETE ELEMENTS ~~REINFORCED CONCRETE STRUCTURAL SYSTEMS COMPOSED FROM INTERCONNECTED PRECAST ELEMENTS~~

Chapter 10, STEEL AND CONCRETE STRUCTURE DESIGN REQUIREMENTS

10.1 REFERENCE DOCUMENTS
ACI 318
AISC/LRFD
AISC Seismic
AISI
10.2 REQUIREMENTS

Chapter 11, MASONRY STRUCTURE DESIGN REQUIREMENTS

11.1 GENERAL
11.1.1 Scope
11.1.2 Reference Documents
ACI 318
ACI 530
ACI 530.1
11.1.3 Definitions
11.1.4 Notations
11.2 CONSTRUCTION REQUIREMENTS
11.2.1 General
11.2.2 Quality Assurance
11.3 GENERAL REQUIREMENTS
11.3.1 Scope
11.3.2 Empirical Masonry Design
11.3.3 Plain (Unreinforced) Masonry Design
11.3.4 Reinforced Masonry Design
11.3.5 Seismic Design Category A
11.3.6 Seismic Design Category B
11.3.7 Seismic Design Category C
11.3.8 Seismic Design Category D
11.3.9 Seismic Design Categories E and F

11.3.10 Properties of Materials
11.3.11 Section Properties
11.3.12 Headed and Bent-Bar Anchor Bolts
11.4 DETAILS OF REINFORCEMENT
11.4.1 General
11.4.2 Size of Reinforcement
11.4.3 Placement Limits for Reinforcement
11.4.4 Cover for Reinforcement
11.4.5 Development of Reinforcement
11.5 STRENGTH AND DEFORMATION REQUIREMENTS
11.5.1 General
11.5.2 Required Strength
11.5.3 Design Strength
11.5.4 Deformation Requirements
11.6 FLEXURE AND AXIAL LOADS
11.6.1 Scope
11.6.2 Design Requirements of Reinforced Masonry Members
11.6.3 Design of Plain (Unreinforced) Masonry Members
11.7 SHEAR
11.7.1 Scope
11.7.2 Shear Strength
11.7.3 Design of Reinforced Masonry Members
11.7.4 Design of Plain (Unreinforced) Masonry Members
11.8 SPECIAL REQUIREMENTS FOR BEAMS
11.9 SPECIAL REQUIREMENTS FOR COLUMNS
~~11.10 SPECIAL REQUIREMENTS FOR WALLS~~
11.11 SPECIAL REQUIREMENTS FOR SHEAR WALLS
11.10 ~~11~~.1 Ordinary Plain Masonry Shear Walls
11.10 ~~11~~.2 Detailed Plain Masonry Shear Walls
11.10 ~~11~~.3 Ordinary Reinforced Masonry Shear Walls
11.10 ~~11~~.4 Intermediate Reinforced Masonry Shear Walls
11.10 ~~11~~.5 Special Reinforced Masonry Shear Walls
11.10 ~~11~~.6 Flanged Shear Walls
11.10 ~~11~~.7 Coupled Shear Walls
11.11 ~~12~~ SPECIAL MOMENT FRAMES OF MASONRY
11.11 ~~12~~.1 Calculation of Required Strength
11.11 ~~12~~.2 Flexural Yielding
11.11 ~~12~~.3 Reinforcement
11.11 ~~12~~.4 Wall Frame Beams
11.11 ~~12~~.5 Wall Frame Columns
11.11 ~~12~~.6 Wall Frame Beam-Column Intersection
11.12 ~~13~~ GLASS-UNIT MASONRY AND MASONRY VENEER
11.12 ~~13~~.1 Design Lateral Forces and Displacements
11.12 ~~13~~.2 Glass-Unit Masonry Design
11.12 ~~13~~.3 Masonry Veneer Design

~~Appendix to Chapter 11, ALTERNATIVE PROVISIONS FOR THE DESIGN OF MASONRY STRUCTURES~~

Chapter 12, WOOD STRUCTURE DESIGN REQUIREMENTS

12.1 GENERAL
12.1.1 Scope
12.1.2 Reference Documents
ASCE 16
APA Y510T
APA N375B
APA E315H
CABO Code
NFoPA T903
PS20
ANSI/AITC A190.1
ASTM D5055-95A
PS 1
PS 2
ANSI 05.1
ANSI A208.1
AWPA C1, 2, 2, 3, 9, 28
12.1.3 Notations
12.2 DESIGN METHODS
12.2.1 Engineered Wood Design
12.2.2 Conventional Light-Frame Construction
12.3 GENERAL DESIGN REQUIREMENTS FOR ENGINEERED WOOD CONSTRUCTION
12.3.1 General
12.3.2 Shear Resistance Based on Principles of Mechanics ~~Framing Requirements~~
12.3.3 Deformation Compatibility Requirements
12.3.4 Framing Requirements
12.3.5 Sheathing Requirements
12.3.6 Wood Members Resisting Horizontal Seismic Forces Contributed by Masonry and Concrete
~~12.3.4 Design Limitations~~
12.4 DIAPHRAGMS AND SHEAR WALLS
12.4.1 Diaphragms ~~and Shear Wall Aspect Ratios~~
12.4.2 Shear Walls
12.4.3 Perforated Shear Walls
~~12.4.2 Shear Resistance Based on Principles of Mechanics~~
~~12.4.3 Sheathing Requirements~~
12.5 CONVENTIONAL LIGHT-FRAME CONSTRUCTION
12.5.1 Scope
12.5.2 Braced Walls

12.5.3 Detailing Requirements
12.6 SEISMIC DESIGN CATEGORY A
12.7 SEISMIC DESIGN CATEGORIES B, C, AND D
12.7.1 Conventional Light-Frame Construction
12.7.2 Engineered Construction
12.8 SEISMIC DESIGN CATEGORIES E AND F
12.8.1 Limitations

Chapter 13, SEISMICALLY ISOLATED STRUCTURES DESIGN REQUIREMENTS

13.1 GENERAL
13.2 CRITERIA SELECTION
13.2.1 Basis for Design
13.2.2 Stability of the Isolation System
13.2.3 Seismic Use Group
13.2.4 Configuration Requirements
13.2.5 Selection of Lateral Response Procedure
13.3 EQUIVALENT LATERAL FORCE PROCEDURE
13.3.1 General
13.3.2 Deformation Characteristics of the Isolation System
13.3.3 Minimum Lateral Displacements
13.3.4 Minimum Lateral Forces
13.3.5 Vertical Distribution of Force
13.3.6 Drift Limits
13.4 DYNAMIC LATERAL RESPONSE PROCEDURE
13.4.1 General
13.4.2 Isolation System and Structural Elements Below the Isolation System
13.4.3 Structural Elements Above the Isolation System
13.4.4 Ground Motion
13.4.5 Mathematical Model
13.4.6 Description of Analysis Procedures
13.4.7 Design Lateral Force
13.5 LATERAL LOAD ON ELEMENTS OF *STRUCTURES* AND NONSTRUCTURAL COMPONENTS SUPPORTED BY BUILDINGS
13.5.1 General
13.5.2 Forces and Displacements
13.6 DETAILED SYSTEM REQUIREMENTS
13.6.1 General
13.6.2 Isolation System
13.6.3 Structural System
13.7 FOUNDATIONS
13.8 DESIGN AND CONSTRUCTION REVIEW
13.8.1 General
13.8.2 Isolation System

13.9 REQUIRED TESTS OF THE ISOLATION SYSTEM
13.9.1 General
13.9.2 Prototype Tests
13.9.3 Determination of Force-Deflection Characteristics
13.9.4 Test Specimen Adequacy
13.9.5 Design Properties of the Isolation System

Appendix to Chapter 13, STRUCTURES WITH DAMPING SYSTEMS ~~PASSIVE ENERGY DISSIPATION~~

Chapter 14, NONBUILDING STRUCTURE DESIGN REQUIREMENTS

14.1 GENERAL
14.1.1 Scope
14.2 REFERENCES
14.3 INDUSTRY DESIGN STANDARDS AND RECOMMENDED PRACTICE
14.4 ~~14.1.2~~ Nonbuilding Structures Supported by Other Structures
14.4.1 ~~14.1.3~~ Architectural, Mechanical, and Electrical Components
~~14.1.4 Loads~~
~~14.1.5 Fundamental Period~~
~~14.1.6 Drift Limitations~~
~~14.1.7 Materials Requirements~~
14.5 ~~14.2~~ STRUCTURAL DESIGN REQUIREMENTS
14.5.1 ~~14.2.1~~ Design Basis
14.5.2 ~~14.2.2~~ Rigid Nonbuilding Structures
14.5.3 Loads
14.5.4 Fundamental Period
14.5.5 Drift Limitations
14.5.6 Materials Requirements
14.5.7 ~~14.2.3~~ Deflection Limits and Structure Separation
14.5.8 Site-Specific Response Spectra
14.6 ~~14.3~~ NONBUILDING STRUCTURES SIMILAR TO BUILDINGS
14.6 ~~14.3~~.1 General
14.6 ~~14.3~~.2 Pipe Racks
14.6 ~~14.3~~.3 Steel Storage Racks
14.6 ~~14.3~~.4 Electrical Power Generating Facilities
14.6 ~~14.3~~.5 Structural Towers for Tanks and Vessels
14.6 ~~14.3~~.6 Piers and Wharves
14.7 ~~14.4~~ NONBUILDING STRUCTURES NOT SIMILAR TO BUILDINGS
14.7 ~~14.4~~.1 General
14.7 ~~14.4~~.2 Earth Retaining Structures
14.7 ~~14.4~~.3 Tanks and Vessels
~~14.4.4 Electrical Transmission, Substation, and Distribution Structures~~
~~14.4.5 Telecommunication Towers~~
14.7.4 ~~14.4~~.6 Stacks and Chimneys

14.7.5 ~~14.4.7~~ Amusement Structures
14.7.6 ~~14.4.8~~ Special Hydraulic Structures
14.7.7 Secondary Containment Systems
~~14.4.9 Buried Structures~~
~~14.4.10 Inverted Pendulums~~

Appendix B

PARTICIPANTS IN THE BSSC 2000 *PROVISIONS* UPDATE PROGRAM

1998 BSSC BOARD OF DIRECTION

Chairman

Eugene Zeller, City of Long Beach, California

Vice Chairman

William W. Stewart, Stewart-Schaberg Architects, Clayton, Missouri (representing the American Institute of Architects)

Secretary

David P. Tyree, American Forest and Paper Association, Colorado Springs, Colorado

Ex-Officio

James E. Beavers, Beavers and Associates, Oak Ridge, Tennessee

Members

J. Gregg Borchelt, Brick Industry Association, Reston, Virginia

Eugene Cole, Carmichael, California (representing the Structural Engineers Association of California)

S. K. Ghosh, S.K. Ghosh Associates, Skokie, Illinois (representing the Portland Cement Association)

Nestor Iwankiw, American Institute of Steel Construction, Chicago, Illinois

Gerald H. Jones, Kansas City, Missouri (representing the National Institute of Building Sciences)

Joseph Nicoletti, URS/John A. Blume and Associates, San Francisco, California (representing the Earthquake Engineering Research Institute)

Jack Prosek, Turner Construction Company, San Francisco, California, (representing the Associated General Contractors of America)

W. Lee Shoemaker, Metal Building Manufacturers Association, Cleveland, Ohio

John C. Theiss, Theiss Engineers, Inc., St. Louis, Missouri (representing the American Society of Civil Engineers)

Charles Thornton, Thornton-Tomasetti Engineers, New York, New York (representing the Applied Technology Council)

David Wismer, Department of Licenses and Inspections, Philadelphia, Pennsylvania (representing the Building Officials and Code Administrators International)

Richard Wright, National Institute of Standards and Technology, Gaithersburg, Maryland (representing the Interagency Committee for Seismic Safety in Construction)

1999 BSSC BOARD OF DIRECTION

Chairman

William W. Stewart, Stewart-Schaberg Architects, Clayton, Missouri

Vice Chairman

David P. Tyree, American Forest and Paper Association, Colorado Springs, Colorado

Secretary

Jack Prosek, Turner Construction Company, San Francisco, California (representing the Associated Contractors of America)

Ex-Officio

Eugene Zeller, City of Long Beach, California

Members

J. Gregg Borchelt, Brick Industry Association, Reston, Virginia

Bradford K. Douglas, American Forest and Paper Association, Washington, D.C.

Do Y. Kim, Institute for Business and Home Safety, Boston, Massachusetts

Howard Simpson, Simpson Gumpertz & Heger, Arlington, Massachusetts (representing National Council of Structural Engineers Associations)

Charles Carter, American Institute of Steel Construction, Chicago, Illinois

S. K. Ghosh, Portland Cement Association, Skokie, Illinois

Gerald H. Jones, Kansas City, Missouri (representing the National Institute of Building Sciences)

H. S. Lew, National Institute of Standards and Technology, Gaithersburg, Maryland (representing the Interagency Committee on Seismic Safety in Construction)

Joseph Nicoletti, URS Consultants, San Francisco, California (representing the Earthquake Engineering Research Institute)

Lee Shoemaker, Metal Building Manufacturers Association, Cleveland, Ohio

Charles Spitz, Architect/Planner/Code Consultant, Wall, New Jersey (representing the American Institute of Architects)

John Theiss, St, Albans, Missouri (representing the American Society of Civil Engineers)

Charles Thornton, Thornton-Tomasetti Group, New York, New York (representing the Applied Technology Council)

David Wismer, Department of Licenses and Inspections, Philadelphia, Pennsylvania (representing Building Officials and Code Administrators International)

2000 BSSC BOARD OF DIRECTION

Chairman

William W. Stewart, Stewart-Schaberg Architects, Clayton, Missouri (representing the American Institute of Architects)

Vice Chairman

Charles Thornton, Chairman/Principal, Thornton-Tomasetti Group, Inc., New York, New York

Secretary

John "Jack" Prosek, Jr., Project Manager, Turner Construction Company, Oakland, California (representing Associated General Contractors of America)

Ex-Officio

Eugene Zeller, Director of Planning and Building, City of Long Beach, California

Members

J. Gregg Borchelt, Vice President, Brick Industry Association, Reston, Virginia

Charles J. Carter, Director of Manuals, American Institute of Steel Construction, Chicago, Illinois

Bradford K. Douglas, Director of Engineering, American Forest and Paper Association, Washington, D.C.

S. K. Ghosh, S.K. Ghosh Associates, Skokie, Illinois (representing the Portland Cement Association)

Gerald H. Jones, Kansas City, Missouri (representing the National Institute of Building Sciences)

H.S. Lew, Senior Research Engineer, National Institute of Standards and Technology, Gaithersburg, Maryland (representing Interagency Committee on Seismic Safety in Construction)

Joseph Nicoletti, Senior Consultant, URS/John A. Blume and Associates, San Francisco, California (representing the Earthquake Engineering Research Institute)

W. Lee Shoemaker, Director, Engineering and Research, Metal Building Manufacturers Association, Cleveland, Ohio

Howard Simpson, Simpson Gumpertz and Heger, Arlington, Massachusetts (representing National Council of Structural Engineers Associations)

Charles A. Spitz, Architect/Planner/Code Consultant, Wall New Jersey (representing the American Institute of Architects)

John C. Theiss, Consultant, St. Albans, Missouri (representing the American Society of Civil Engineers)

David Wismer, Department of Licenses and Inspections, Philadelphia, Pennsylvania (representing the Building Officials and Code Administrators International)

BSSC STAFF

Thomas R. Hollenbach, Executive Director (through April 2000)

Claret M. Heider, Vice President, BSSC

Bernard F. Murphy, Director, Special Projects

Carita Tanner, Communications/Public Relations Manager

Patricia Blasi, Administrative Assistant

Kelly Harris, Summer Intern

2000 PROVISIONS UPDATE COMMITTEE

Chair

William T. Holmes, Rutherford and Chekene, San Francisco, California

Representing Technical Subcommittee 1, Design Mapping

R. Joe Hunt, BWXT Y-12, LLC, Oak Ridge, Tennessee

C. B. Crouse, URS Corporation, Seattle, Washington

E. V. Leyendecker, U.S. Geological Survey, Denver, Colorado

Representing Technical Subcommittee 2, Design Criteria and Analysis

Ronald O. Hamburger, EQE International, San Francisco, California

James R. Harris, J. R. Harris and Company, Denver, Colorado

Richard J. Phillips, Hillman, Biddison and Loevenguth, Los Angeles, California

Representing Technical Subcommittee 3, Foundations and Geotechnical Considerations

Maurice S. Power, Geomatrix Consultants, Oakland, California

Cetin Soydemir, Haley and Aldrich, Boston, Massachusetts

Representing Technical Subcommittee 4, Concrete Structures

W. Gene Corley, Construction Technology Laboratories, Skokie, Illinois

Joseph J. Messersmith, Regional Code Services, Portland Cement Association, Rockville, Virginia (since February 1997)

Neil Hawkins, Newmark CE Laboratory, University of Illinois, Urbana, Illinois

Representing Technical Subcommittee 5, Masonry Structures

Daniel Shapiro, SOHA Engineers, San Francisco, California

Daniel P. Abrams, MAE Center, University of Illinois, Urbana

Jason J. Thompson, National Concrete Masonry Association, Herndon, Virginia

Representing Technical Subcommittee 6, Steel Structures

C. Mark Saunders, Rutherford and Chekene, San Francisco, California

Harry W. Martin, American Iron and Steel Institute, Auburn, California

Subhash C. Goel, University of Michigan, Ann Arbor, Michigan

Representing Technical Subcommittee 7, Wood Structures

J. Daniel Dolan, Virginia Polytechnic Institute and State University, Blacksburg

Kelly Cobeen, GFDS Engineers, San Francisco, California

Philip Line, American Forest and Paper Association, Washington, D.C.

Representing Technical Subcommittee 8, Mechanical/Electrical Systems and Building Equipment and Architectural Elements

John D. Gillengerten, Office of Statewide Health and Planning and Development, Sacramento, California

Robert E. Bachman, Consulting Structural Engineer, Westlake Village, California

Pat Lama, Mason Industries, Hauppage, New York

Representing Technical Subcommittee 9, Quality Assurance

Douglas M. Smits, Division of Building Inspections, City of Charleston, South Carolina

Jim W. Sealy, Jim W. Sealy/Architect/Consultant, Dallas, Texas

Representing Technical Subcommittee 11, Composite Steel and Concrete Structures

Roberto T. Leon, Georgia Institute of Technology, Atlanta, Georgia

Clarkson W. Pinkham, S. B. Barnes Associates, Los Angeles, California

Representing Technical Subcommittee 12, Base Isolation and Energy Dissipation

Charles Kircher, Charles Kircher and Associates, Consulting Engineers, Palo Alto, California

Michael Constantinou, State University of New York, Buffalo

Representing Technical Subcommittee 13, Nonbuilding Structures

Harold Sprague, Structural Engineer, Black and Veatch, Overland Park, Kansas

Stephen W. Meier, Tank Industry Consultants, Indianapolis, Indiana

At-Large Member

Ed Sutton, National Association of Home Builders, Washington, D.C. (since June 1997)

Robert McCluer, Building Officials and Code Administrators International, Country Club Hills, Illinois

Alan Carr, International Council of Building Officials, Bellevue, Washington

Ex-officio Voting Member

Loring Wyllie, Degenkolb Engineers, San Francisco, California

PUC TECHNICAL SUBCOMMITTEES

Technical Subcommittee 1, DESIGN MAPPING

Chair

R. Joe Hunt, BWXT Y-12, LLC, Oak Ridge, Tennessee

Members

C.B. Crouse, Dames and Moore, Inc., Seattle, Washington

John D. Hooper, Skilling Ward Magnusson Barkshire, Seattle, Washington

William B. Joyner, U.S. Geological Survey, Menlo Park, California

Jeffrey K. Kimball, Engineering and Operations Support, U.S. Department of Energy, Germantown, Maryland

E.V. Leyendecker, U.S. Geological Survey, Denver, Colorado

Guy J. P. Nordenson, Nordenson & Associates, New York, New York

Chris D. Poland, Degenkolb Engineers, San Francisco, California

Paul G. Somerville, Woodward-Clyde Federal Services, Pasadena, California

Corresponding Members

Roger D. Borcherdt, U.S. Geological Survey, Menlo Park, California

S.K. Ghosh, S.K. Ghosh Associates, Inc., Northbrook, Illinois

Rene W. Luft, Simpson, Gumpertz & Heger, San Francisco, California

Perry M. McKimmey, City of Fayetteville, Arkansas

Jeffrey Munsey, Tennessee Valley Authority, Knoxville, Tennessee

R. Hayne Palmer, Jr., United Consulting Group, Ltd., Norcross, Georgia

John C. Theiss, St. Albans, Missouri

Eugene L. Trahern, Coughlin Porter Lundeen, Seattle, Washington

Technical Subcommittee 2, DESIGN CRITERIA AND ANALYSIS

Chair

Ronald O. Hamburger, EQE International, Inc., Oakland, California

Members

Anil K. Chopra, Civil and Environmental Engineering, University of California, Berkeley

Anthony Brooks Court, Travis, Verdugo, Curry and Associates, San Diego, California

Mohammed M. Ettourney, Weidlinger Associates, Inc., New York, New York

S.K. Ghosh, S.K. Ghosh Associates, Inc., Northbrook, Illinois

James R. Harris, J. R. Harris and Company, Denver, Colorado

John D. Hooper, Skilling Ward Magnusson, Seattle, Washington

Richard J. Phillips, Hillman, Biddison and Loevenguth, Los Angeles, California

Andrei M. Reinhorn, State University of New York, Buffalo

Corresponding Members

David R. Bonneville, Degenkolb Engineers, San Francisco, California

Antonio Braga, Factory Mutual, Orange, California

Walter B. Grossman, Department of Advanced Technology, Brookhaven National Laboratory, Upton, New York

Husein Hasan, Tennessee Valley Authority, Knoxville, Tennessee

Leonard Joseph, Thornton-Tomasetti Group, New York, New York

John P. Kiland, DASSE Design, Inc., San Francisco, California

Uno Kula, Uno Kula, P.E., Phoenix, Arizona

Colin Kumabe, Department of Building and Safety, Los Angeles, California

Mark Pierepiekarz, EQE International, Seattle, Washington

Steven E. Pryor, Simpson Strong-Tie, Dublin, California

John G. Shipp, EQE International, Irvine, California

Richard Silva, National Park Service, Lakewood, Colorado

Chia-Ming Uang, University of California, San Diego

Howard Zee, Monte Stott and Associates, San Fracisco, California

Technical Subcommittee 3, FOUNDATIONS AND GEOTECHNICAL CONSIDERATIONS

Chair

Maurice S. Power, Geomatrix Consultants, San Francisco, California

Members

C. B. Crouse, URS Corporation, Seattle, Washington

Ricardo Dobry, Renssalaer Polytechnic Institute, Troy, New York

Tom H. Hale, California Office of Statewide Health Planning and Development, Sacramento, California

Edward E. Rinne, Kleinfelder, Inc., Oakland, California

Cetin Soydemir, Haley and Aldrich, Inc., Boston, Massachusetts

Corresponding Members

Roger D. Borcherdt, U.S. Geological Survey, Menlo Park, California

Paul L. Cloke, Science Applications International Corporation, Las Vegas, Nevada

Richard B. Fallgren, Myers, Nelson, Houghton & Partners, Inc., Lawndale, California

Husein Hasan, Tennessee Valley Authority, Knoxville, Tennessee

Neil M. Hawkins, University of Illinois, Urbana

Klaus H. Jacob, Lamont Doherty Earth Observatory of Columbia University, Palisades, New York

William B. Joyner, U.S. Geological Survey, Menlo Park, California

Farhang Ostadan, Bechtel Corporation, San Francisco, California

Jonathan P. Stewart, University of California, Los Angeles

Steven A. Wendland, GeoSystems Engineering, Inc., Lenexa, Kansas

T. Leslie Youd, Brigham Young University, Provo, Utah

Technical Subcommittee 4, CONCRETE STRUCTURES

Chair

W. Gene Corley, Construction Technology Laboratories, Skokie, Illinois

Members:

David E. Arndt, KPFF Consulting Engineers, Seattle, Washington

Ned M. Cleland, Blue Ridge Design, Inc., Winchester, Virginia

S. K. Ghosh, S.K. Ghosh Associates, Northbrook, Illinois

David P. Gustafson, Concrete Reinforcing Steel Institute, Schaumburg, Illinois

Neil M. Hawkins, University of Illinois, Urbana

H. S. Lew, National Institute of Standards and Technology, Gaithersburg, Maryland

Rene W. Luft, Simpson Gumpertz & Heger, San Francisco, California

Joe Maffei, Rutherford & Chekene Consulting Engineers, Oakland, California

Joseph J. Messersmith, Jr., Portland Cement Association, Rockville, Virginia

James K. Wight, Department of Civil and Environmental Engineering, University of Michigan, Ann Arbor

Richard Wollmershauser, Hilti, Inc., Tulsa, Oklahoma

Corresponding Members:

Max A. Gregersen, Centry Inc., Salt Lake City, Utah

Jacob S. Grossman, Rosenwasser-Grossman and Associates, New York, New York

Jack P. Moehle, Pacific Earthquake Engineering Research Center, Richmond, California

Antonio Nanni, Pennsylvania State University, University Park

Michael G. Oliva, University of Wisconsin, Madison

Frank K.H. Park, Guilford County Planning and Development, Greensboro, North Carolina

Paul C. Perrin, Black and Veatch Special Projects Corporation, Overland Park, Kansas

David A. Sheppard, Consulting Structural Engineer, Inc., Sonora, California

Itzhak Tepper, American Structural Engineers, Falls Church, Virginia

Jack Walker, Jack Walker, Inc., Calabasas, California

Technical Subcommittee 5, MASONRY STRUCTURES

Chair

Daniel Shapiro, SOH and Associates, Structural Engineers, San Francisco, California

Members

Daniel P. Abrams, University of Illinois MAE Center, Urbana

J. Gregg Borchelt, Brick Institute of America, Reston, Virginia

John C. Kariotis, Kariotis and Associates, Structural Engineers, Inc., South Pasadena, California

H. Kit Miyamoto, Structural Engineers Association of Central California, Fair Oaks, California

Max L. Porter, Department of Civil Engineering, Iowa State University, Ames

Jason J. Thompson, National Concrete Masonry Association, Herndon, Virginia

Terence A. Weigel, Department of Civil Engineering, University of Louisville, Kentucky

Corresponding Members

David T. Biggs, Ryan-Biggs Associates, P.C., Troy, New York

Thomas A. Gangel, Wallace Engineering Structural Consultants, Inc., Tulsa, Oklahoma

Ramon Gilsanz, Gilsanz Murray Steficek, LLP, New York, New York

Jon P. Kiland, DASSE Design, Inc., San Francisco, California

Richard E. Kligner, University of Texas, Austin

Antonio Nanni, University of Missouri, Rolla

Frank K. H. Park, Guilford County Planning and Development, Greensboro, North Carolina

Arturo E. Schultz, Civil Engineering, University of Minnesota, Minneapolis

Richard Silva, National Park Service, Lakewood, Colorado

John Tawresey, KPFF Consulting Engineers, Seattle, Washington

Diane Throop, International Masonry Institute, Ann Arbor, Michigan

Technical Subcommittee 6, STEEL STRUCTURES

Chair

C. Mark Saunders, Rutherford and Chekene, San Francisco, California

Members

Subhash C. Goel, University of Michigan, Ann Arbor

Larry G. Griffis, Walter P. Moore and Associates, Houston, Texas

John L. Gross, National Institute of Standards and Technology, Gaithersburg, Maryland

Nestor R. Iwankiw, Technology and Research, American Institute of Steel Construction, Chicago, Illinois

Helmut Krawinkler, Stanford University, Stanford, California

James O. Malley, Degenkolb Engineers, San Francisco, California

Harry W. Martin, Construction Codes and Standards, American Iron and Steel Institute, Auburn, California

Clarkson W. Pinkham, S. B. Barnes Associates, Los Angeles, California

W. Lee Shoemaker, Metal Building Manufacturers Association, Cleveland, Ohio

Kurt D. Swensson, Stanley D. Lindsey and Associates, Ltd., Atlanta, Georgia

Corresponding Members:

Michel Bruneau, Multidisciplinary Center for Earthquake Engineering Research, Buffalo, New York

Richard M. Drake, Fluor Daniel, Inc., Irvine, California

Maury Golovin, Ceco Building Systems, Columbus, Mississippi

Max A. Gregersen, Centry, Inc., Salt Lake City, Utah

Y. Henry Huang, Los Angeles County Department of Public Works, Alhambra, California

Terry R. Lundeen, Coughlin Porter Lundeen, Inc., Seattle, Washington

Paul C. Perrin, Black and Veatch Special Projects Corporation, Overland Park, Kansas

Walter Schultz, Nucor Research and Development, Norfolk, Nebraska

Steven Thomas, Butler Manufacturing Company, Kansas City, Missouri

Chia-Ming Uang, University of California, San Diego

Howard Zee, Monte Stott and Associates, San Francisco, California

Technical Subcommittee 7, WOOD STRUCTURES

Chair

J. Daniel Dolan, Virginia Polytechnic Institute and State University, Blacksburg, Virginia

Members

Joseph G. Burns, Thornton-Tomasetti Group, Chicago, Illinois

Kelly Cobeen, GFDS Engineers, San Francisco, California

Jay Crandell, National Association of Home Builders Research Center, Upper Marlboro, Maryland

Larry D. Franks, Southern Building Code Congress International, Birmingham, Alabama

Robert S. George, Robert S. George Architect, San Bruno, California

Cynthia A. Hoover, City of Seattle, Washington

Philip Line, American Forest and Paper Association, Washington, D.C.

Frank K. H. Park, Guilford County Planning and Development, Greensboro, North Carolina

Thomas D. Skaggs, APA - The Engineered Wood Association, Tacoma, Washington

Edwin Zacher, H. J. Brunnier Associates, San Francisco, California

Corresponding Members

Kevin C. K. Cheung, Engineering Support, Western Wood Products Association, Portland, Oregon

Ted Christensen, Wheeler and Gray Inc., Los Angeles, California

Andre Filiatrault, University of California, San Diego

C. Robert Fuller, National Association of Home Builders Research Division

Erol Karacabeyl, Forintek Canada Corporation, Vancouver, British Columbia, Canada

Edward L. Keith, APA - The Engineered Wood Association, Tacoma, Washington

Mark Oakford, RSE Consulting, Federal Way, Washington

Steven E. Pryor, Simpson Strong-Tie, Dublin California

Victor L. Taugher, Taugher and Associates, Castro Valley, California

David P. Tyree, American Forest and Paper Association, Colorado Springs, Colorado

Technical Subcommittee 8, MECHANICAL/ELECTRICAL SYSTEMS AND BUILDING EQUIPMENT AND ARCHITECTURAL ELEMENTS

Chair

John D. Gillengerten, Office of Statewide Health Planning and Development, Sacramento, California

Members

Leo Argiris, Ove Arup and Partners, New York, New York

Christopher Arnold, Building Systems Development, Inc., Palo Alto, California

Victor Azzi, Rack Manufacturers Institute, Rye, New Hampshire

Robert E. Bachman, Consulting Structural Engineer, Westlake Village, California

Leo Bragagnolo, Port of San Francisco, California

Russell Fleming, National Fire Sprinkler Association, Patterson, New York

Husein Hasan, Tennessee Valley Authority, Knoxville, Tennessee

David B. Hattis, Building Technology, Inc., Silver Spring, Maryland

Pat Lama, Mason Industries, Hauppage, New York

John V. Loscheider, Loscheider Engineering Company, Renton, Washington

Richard J. Phillips, Hillman, Biddison and Loevenguth, Los Angeles, California

Harold Sprague, Black and Veatch Special Projects Corporation, Overland Park, Kansas

William Staehlin, Office of Statewide Health Planning and Development, Sacramento, California

William W. Stewart, Stewart–Schaberg/Architects, Clayton, Missouri

Richard Wollmershauser, Hilti, Inc., Tulsa, Oklahoma

Corresponding Members

Richard A. Behr, Department of Architectural Engineering, Pennsylvania State University, University Park

Antonio Braga, Factory Mutual, Orange, California

Philip Caldwell, Square D Company, Seneca, South Carolina

Paul Meisel, Kinetics Noise Control, Dublin, Ohio

Antonio Nanni, University of Missouri, Rolla

Todd Noce, Mason Industries, Anaheim, California

John "Jack" Prosek, Turner Construction Company, Oakland, California

John F. Silva, Hilti, Inc., San Rafael, California

Tsu T. Soong, Department of Civil Engineering, State University of New York, Buffalo

Jack Walker, Jack Walker, Inc., Calabasas, California

Technical Subcommittee 9, QUALITY ASSURANCE

Chair

Douglas M. Smits, City of Charleston, South Carolina

Members

Warner Howe, Consulting Structural Engineer, Germantown, Tennessee

Robert C. Jacobson, City of Bartlett, Tennessee

Mark Kluver, Regional Code Services, San Ramon, California

Raymond W. McNealy, McNealy Bumberry, Des Peres, Missouri

Tom Schlafly, American Institute of Steel Construction, Chicago, Illinois

Jim W. Sealy, Jim W. Sealy/Architect/Consultant, Dallas, Texas

Charles A. Spitz, Architect/Planner/Code Consultant, Wall, New Jersey

Scott Stedman, Professional Engineers, Arroyo Grande, California

Ed Sutton, Construction, National Association of Home Builders, Washington, D.C. (since June 1997)

Corresponding Members

John V. Loscheider, Loscheider Engineering Company, Renton, Washington

Richard J. Phillips, Hillman, Biddison and Loevenguth, Los Angeles, California

William A. Stewart, Stewart-Schaberg Architects, Clayton, Missouri

James R. Thomas, Delich, Roth and Goodwillie, P.A., Kansas City, Missouri

Technical Subcommittee 11, COMPOSITE STEEL AND CONCRETE STRUCTURES

Chair

Roberto T. Leon, School of Civil and Environmental Engineering, Georgia Institute of Technology, Atlanta

Members

Gregory Deierlein, School of Civil and Environmental Engineering, Cornell University, Ithaca, New York

Subhash C. Goel, University of Michigan, Ann Arbor

Lawrence G. Griffis, Walter P. Moore and Associates, Houston, Texas

Jerome F. Hajjar, University of Minnesota, Minneapolis

Neil M. Hawkins, University of Illinois, Urbana

Kevin LeSmith, Skilling Ward Magnusson Barkshire, Inc., Seattle, Washington

Clarkson W. Pinkham, S. B. Barnes Associates, Los Angeles, California

Bahram M. Sharooz, University of Cincinnati, Ohio

Corresponding Members

Scott A. Civjan, University of Massachusetts, Amherst

Nestor R. Inwankiw, Technology and Research, American Institute of Steel Construction, Chicago, Illinois

James O. Malley, Degenkolb Engineers, San Francisco, California

Ivan M. Viest, Hellertown, Pennsylvania

James K. Wight, University of Michigan, Ann Arbor

Technical Subcommittee 12, BASE ISOLATION AND ENERGY DISSIPATION

Chair

Charles Kircher, Charles Kircher and Associates, Consulting Engineers, Palo Alto, California

Members

Ian Aiken, Seismic Isolation Engineering, Inc., Oakland, California

Michael Constantinou, Department of Civil Engineering, State University of New York, Buffalo

Robert D. Hanson, Federal Emergency Management Agency, Pasadena, California

Douglas Hochbach, Hochbach-Lewin, Inc., Palo Alto, California

Andrew W. Taylor, KPFF Consulting Engineers, Seattle, Washington

Andrew Whittaker, Earthquake Engineering Research Center, University of California, Richmond

Corresponding Members

Finley A. Charney, Schnabel Engineering Associates, Denver Colorado

Husein Hasan, Tennessee Valley Authority, Knoxville, Tennessee

Ronald L. Mayes, Dynamic Isolation Systems, Lafayette, California

Tsu T. Soong, State University of New York, Buffalo

Technical Subcommittee 13, NONBUILDING STRUCTURES

Chair

Harold Sprague, Black and Veatch Special Projects Corporation, Overland Park, Kansas

Members

Victor Azzi, Rack Manufacturers Institute, Rye, New Hampshire

Clayton L. Clem, Structural and Foundation Engineering Department, Tennessee Valley Authority, Chattanooga, Tennessee

Ralph T. Eberts, Black and Veatch, Los Angeles, California

John D. Gillengerten, Office of Statewide Health Planning and Development, Sacramento, California

Frank J. Hsiu, Chevron Research and Technology Company, Richmond, California

Leon Kempner, Jr., Bonneville Power Administration, Portland, Oregon

Nicholas A. Legatos, Vice President, Preload Inc., Hauppage, New York

Stephen W. Meier, Engineering and Technology, Tank Industry Consultants, Inc., Indianapolis, Indiana

Corresponding Members

Mark Anderson, Consulting Engineer, Anchorage, Alaska

Douglas G. Honegger, Consultant, Arroyo Grande, California

Praveen K. Malhotra, Factory Mutual Research, Norwood, Massachusetts

Dennis Niehoff, Bechtel Savannah River, Inc., Grovetown, Georgia

Michael R. Simac, Earth Improvement Technologies, Cramerton, North Carolina

BSSC SIMPLIFIED PROCEDURES TASK GROUP

Chair

Glenn Bell, Simpson Gumpertz & Heger, Inc., Arlington, Massachusetts

Members

Gary Y.K. Chock, Martin and Chock, Inc., Honolulu, Hawaii

William T. Holmes, Rutherford & Chekene, Oakland, California

Edwin T. Huston, Smith and Huston, Inc., Seattle, Washington

Paul A. Murray, Structural Design Group, Inc., Nashville, Tennessee

Richard J. Phillips, Hillman Biddison and Loevenguth, Los Angeles, California

Douglas, M. Smits, City of Charleston, South Carolina

Corresponding Members

Ramon Gilsanz, Gilsanz Murray Steficek, LLP, New York, New York

Robert I. Johnson, R.I. Johnson & Associates Consulting Engineers, Wheaton, Illinois

Jacob M. Kramer, Sargent & Lundy, LLP, Chicago, Illinois

Philip Line, American Forest and Paper Association, Washington, D.C.

Robert McCluer, Codes, Building Officials and Code Administrators International, Country Club Hills, Illinois

Guy J.P. Nordenson, Nordenson & Associates, LLP, New York, New York

Michael G. Oliva, College of Engineering, University of Wisconsin, Madison

Cetin Soydemir, Haley and Aldrich, Inc., Boston, Massachusetts

Philip C. Terry, Burns & McDowell, Kansas City, Missouri

John C. Theiss, St. Albans, Missouri

BSSC ANCHORAGE TASK GROUP

Chair

Daniel Shapiro, SOHA Engineers, San Francisco, California

Members

Robert E. Bachman, Consulting Structural Engineer, Westlake Village, California

David E. Bonneville, Degenkolb Engineers, San Francisco, California

J. Gregg Borchelt, Brick Industry Association, Reston, Virginia

W. Gene Corley, Construction Technology Laboratories, Skokie, Illinois

J. Daniel Dolan, Virginia Polytechnic and State University, Blacksburg, Virginia

John D. Gillengerten, Office of Statewide Health Planning and Development, Sacramento ,California

James R. Harris, J. R. Harris & Company, Denver, Colorado

Philip J. Iverson, Precast/Prestressed Concrete Institute, Chicago, Illinois

Richard E. Klingner, University of Texas, Austin

Stephen W. Meier, Tank Industry Consultants, Inc., Indianapolis, Indiana

A. Fattah Shaikh, University of Wisconsin, Milwaukee

Douglas M. Smits, City of Charleston, South Carolina

James R. Tauby, Mason Industries, Hauppage, New York

Jason J. Thompson, National Concrete Masonry Association, Herndon, Virginia

David L. Wismer, City of Philadelphia, Pennsylvania

Richard Wollmershauser, Technical Services, Hilti, Inc., Tulsa, Oklahoma

Roger Becker, Computerized Structural Design, Inc., Milwaukee, Wisconsin

William T. Holmes, Rutherford and Chekene, Oakland, California

REPRESENTATIVES OF BSSC MEMBER ORGANIZATIONS AND THEIR ALTERNATES

AFL-CIO Building and Construction Trades Department

Representative Pete Stafford, Center to Protect Workers' Rights, Washington, D.C.

American Concrete Institute

Representative Shuaib H. Ahmed, American Concrete Institute, Farmington Hills, Michigan

Alternate Daniel W. Falconer, American Concrete Institute, Farmington Hills, Michigan

American Consulting Engineers Council

Representative Roy G. Johnston, Brandow and Johnston Associates, Los Angeles, California

Alternate Edward Bajer, American Consulting Engineers Council, Washington, D.C.

American Forest and Paper Association

Representative David P. Tyree, American Forest and Paper Association, Colorado Springs, Colorado

Alternate Bradford K. Douglas, American Forest and Paper Association, Washington, D.C.

American Institute of Architects

Representative Charles A. Spitz, Architect/Planner/Code Consultant, Wall, New Jersey

Alternate Gabor Lorant, Lorant Group, Inc., Phoenix, Arizona

American Institute of Steel Construction

Representative Charles J. Carter, American Institute of Steel Construction, Chicago, Illinois

Alternate Nestor R. Iwankiw, American Institute of Steel Construction, Chicago, Illinois

American Insurance Services Group, Inc.

Representative John A. Mineo, American Insurance Services Group, Inc., New York, New York

Alternate James G. Borchardt, Bituminous Insurance Company, Rock Island, Illinois

American Iron and Steel Institute

Representative Harry W. Martin, American Iron and Steel Institute, Auburn, California

American Society of Civil Engineers

Representative James A. Rossberg, American Society of Civil Engineers, Reston, Virginia

Alternate Douglas E. Honegger, Consultant, Arroyo Grande, California

American Society of Civil Engineers – Kansas City Chapter

Representative F. Alan Wiley, Black and Veatch, Overland Park, Kansas

Alternate Thomas Heausler, Heausler Structural Engineers, Foster City, California

American Society of Heating, Refrigeration, and Air-Conditioning Engineers

Representative William Staehlin, Office of State Health Planning and Development, Sacramento, California

Alternate Bruce D. Hunn, American Society of Heating, Refrigeration, and Air-Conditioning Engineers

American Society of Mechanical Engineers

Representative Ronald W. Haupt, Pressure Piping Engineering Associates, Inc., Foster City, California

American Welding Society

Representative Hardy H. Campbell III, American Welding Society, Miami, Florida

Alternate William R. Oates, American Welding Society, Miami, Florida

APA - The Engineered Wood Association

Representative Thomas D. Skaggs, APA - The Engineered Wood Association, Tacoma, Washington

Alternate Edward L. Keith, APA - The Engineered Wood Association, Tacoma, Washington

Applied Technology Council

Representative Christopher Rojahn, Applied Technology Council, Redwood City, California

Alternate Charles Thornton, Thornton-Tomasetti Group, Inc., New York, New York

Associated General Contractors of America

Representative John "Jack" Prosek, Turner Construction Company, Oakland, California

Alternate Dirk Haire, Associated General Contractors of America, Alexandria, Virginia

Association of Engineering Geologists

Representative Ellis Krinitzsky, U.S. Army Corps of Engineers, Vicksburg, Mississippi

Alternate Patrick J. Barosh, Patrick J. Barosh and Associates, Bristol, Rhode Island

Association of Major City Building Officials

Representative Andrew A. Adelman, City of Los Angeles, California

Alternate Walter R. Krukow, City of Los Angeles, California

Brick Industry Association

Representative J. Gregg Borchelt, Brick Industry Association, Reston, Virginia

Alternate Charles Clark, Jr., Brick Industry Association, Reston, Virginia

Building Officials and Code Administrators International

Representative David L .Wismer, City of Philadelphia, Pennsylvania

Alternate Paul K. Heilstedt, Building Officials and Code Administrators International, Country Club Hills, Illinois

Building Owners and Managers Association International

Representative Michael Jawer, Building Owners and Managers Association International, Washington, D.C.

California Geotechnical Engineers Association

Representative Alan Kropp, Alan Kropp and Associates, Berkeley, California

Alternate John A. Baker, Kleinfelder, Inc., Sacramento, California

California Seismic Safety Commission

Representative Fred Turner, Seismic Safety Commission, Sacramento, California

Canadian National Committee on Earthquake Engineering

Representative R.H. Devall, Canadian National Committee on Earthquake Engineering, Vancouver, British Columbia, Canada

Alternate Cathleen Taraschuk, National Research Council of Canada, Ottawa, Ontario, Canada

Concrete Masonry Association of California and Nevada

Representative Vilas Mujumdar, Concrete Masonry Association of California and Nevada, Citrus Heights, California

Alternate Daniel Shapiro, SOHA Engineers, San Francisco, California

Concrete Reinforcing Steel Institute

Representative David P. Gustafson, Concrete Reinforcing Steel Institute, Schaumburg, Illinois

Alternate Anthony Felder, Concrete Reinforcing Steel Institute, Schaumburg, Illinois

California Division of the State Architect

Representative Dennis Bellet, Division of State Architect, Sacramento, California

Alternate Richard T. Conrad, Division of State Architect, Sacramento, California

Earthquake Engineering Research Institute

Representative Joseph Nicoletti, URS Consultants, San Francisco, California

Alternate F. Robert Preece, San Francisco, California

General Services Administration (9PCT)

Representative Bela I. Palfalvi, General Services Administration 9PCT, San Francisco, California

Alternate Catherine K. Lee, General Services Administration 9 PCT, San Francisco, California

Hawaii State Earthquake Advisory Board

Representative Gary Y. K. Chock, Martin and Chock, Inc., Honolulu, Hawaii

Alternate Paul Okubo, Hawaii State Earthquake Advisory Board, Honolulu, Hawaii

Institute for Business and Home Safety

Representative Jeffrey Sciaudone, Institute for Business and Home Safety, Tampa Florida

Interagency Committee on Seismic Safety in Construction

Representative H. S. Lew, National Institute of Standards and Technology, Gaithersburg, Maryland

Alternate Shyam Sunder, National Institute of Standards and Technology, Gaithersburg, Maryland

International Conference of Building Officials

Representative Paul Armstrong, International Conference of Building Officials, Whittier, California

Alternate Alan Carr, International Conference of Building Officials, Bellevue, Washington

International Masonry Institute

Representative Diane Throop, International Masonry Institute, Ann Arbor, Michigan

Alternate Richard Filloramo, International Masonry Institute, Glastonbury, Connecticut

Masonry Institute of America

Representative John Chrysler, Masonry Institute of America, Los Angeles, California

Metal Building Manufacturers Association

Representative W. Lee Shoemaker, Metal Building Manufacturers Association, Cleveland, Ohio

Alternate Joe N. Nunnery, VP Buildings, Memphis, Tennessee

Mid-America Earthquake Center

Representative Daniel P. Abrams, Mid-America Earthquake Center, University of Illinois, Urbana

Alternate James E. Beavers, Mid-America Earthquake Center, University of Illinois, Urbana

National Association of Home Builders

Representative Ed Sutton, National Association of Home Builders, Washington, D.C.

National Concrete Masonry Association

Representative Jason J. Thompson, National Concrete Masonry Association, Herndon, Virginia

Alternate Robert Zobel, National Concrete Masonry Association, Herndon, Virginia

National Conference of States on Building Codes and Standards

Representative Richard T. Conrad, Division of State Architect, Sacramento, California

Alternate Robert C. Wible, National Conference of States on Building Codes and Standards, Herndon, Virginia

National Council of Structural Engineers Associations

Representative Howard Simpson, Simpson, Gumpertz and Heger, Arlington, Massachusetts

Alternate W. Gene Corley, Construction Technology Laboratories, Skokie, Illinois

National Elevator Industry, Inc.

Representative George A. Kappenhagen, Schindler Elevator Company, Morristown, New Jersey

National Fire Sprinkler Association

Representative Russell P. Fleming, National Fire Sprinkler Association, Patterson, New York

Alternate Victoria Valentine, National Fire Sprinkler Association, Patterson, New York

National Institute of Building Sciences

Representative Henry L. Green, State of Michigan Department of Consumer and Industry Services, Okemos, Michigan

Alternate Gerald H. Jones, Kansas City, Missouri

National Ready Mixed Concrete Association

Representative George Muste, National Ready Mixed Concrete Association, Silver Spring, Maryland

Alternate Colin L. Lobo, National Ready Mixed Concrete Association, Silver Spring, Maryland

Portland Cement Association

Representative Joseph J. Messersmith, Jr., Portland Cement Association, Rockville, Virginia

Alternate S. K. Ghosh, S. K. Ghosh Associates, Inc., Skokie, Illinois

Precast/Prestressed Concrete Institute

Representative Philip J. Iverson, Precast/Prestressed Concrete Institute, Chicago, Illinois

Alternate David A, Sheppard, Consulting Structural Engineer, Sonora, California

Rack Manufacturers Institute

Representative Victor Azzi, Rack Manufacturers Institute, Rye, New Hampshire

Alternate John Nofsinger, Rack Manufacturers Institute, Charlotte, North Carolina

Southern Building Code Congress International

Representative John Battles, Souther Building Code Congress International, Birmingham, Alabama

Alternate T. Eric Stafford, Southern Building Code Congress International, Birmingham, Alabama

Steel Deck Institute, Inc.

Representative Steven A. Roehrig, Steel Deck Institute, Fox River Grove, Illinois

Alternate Donald W. Ball, Consolidated Systems, Inc., Columbia, South Carolina

Structural Engineers Association of California

Representative Bob Hendershot, Structural Engineers Association of California, San Diego, California

Alternate Dough Hochbach, Hochbach-Lewin, Inc., Palo Alto, California

Structural Engineers Association of Central California

Representative H. Kit Miyamoto, Structural Engineers Association of Central California, Fair Oaks, California

Alternate Tom H. Hale, Office of Statewide Health Planning and Development, Sacramento, California

Structural Engineers Association of Colorado

Representative James R. Harris, J. R. Harris and Company, Denver, Colorado

Alternate Robert B. Hunnes, JVA, Inc., Boulder, Colorado

Structural Engineers Association of Illinois

Representative W. Gene Corley, Construction Technology Laboratories, Skokie, Illinois

Structural Engineers Association of Northern California

Representative James O. Malley, Degenkolb Engineers, San Francisco, California

Alternate Edwin G. Zacher, H. J. Brunnier Associates, San Francisco, California

Structural Engineers Association of Oregon

Representative Joseph P. Gehlen, Kramer Gehlen Associates, Vancouver, Washington

Alternate Grant L. Davis, SE Consulting, Cornelius, Oregon

Structural Engineers Association of San Diego

Representative H. John Khadivi, Precision Structural Engineering, San Diego, California

Structural Engineers Association of Southern California

Representative Brian L. Cochran, Brian L. Cochran Associates, Inc. Los Angeles, California

Alternate Saiful Islam, Saiful/Bouquet, Inc., Pasadena, California

Structural Engineers Association of Texas

Representative Joseph Kallaby, OSI, Houston, Texas

Alternate Michael D. Engelhardt, University of Texas – Austin

Structural Engineers Association of Utah

Representative A. Parry Brown, Reaveley Engineers and Associates, Salt Lake City, Utah

Alternate David L. Pierson, ARW Engineers, Ogden, Utah

Structural Engineers Association of Washington

Representative James Carpenter, Structural Engineers Association of Washington, Southworth, Washington

Alternate Michael Valley, Skilling Ward Magnusson Barkshire, Seattle, Washington

The Masonry Society

Representative Arturo E. Schultz, University of Minnesota, Minneapolis

Western States Clay Products Association

Representative Jeff I. Elder, Western State Clay Products Association, West Jordan, Utah

Western States Structural Engineers Association

Representative Greg Shea, Moffat, Nichol and Bonney, Inc., Portland, Oregon

Alternate William T. Rafferty, Structural Design North, Spokane, Washington

Wire Reinforcement Institute, Inc.

Representative Roy H. Reiterman, Wire Reinforcement Institute, Findlay, Ohio

Alternate Robert C. Richardson, Consultant, Sun Lakes, Arizona

REPRESENTATIVES OF BSSC AFFILIATE MEMBERS AND THEIR ALTERNATES

Bay Area Structural, Inc.

Representative David Benaroya Helfant, Bay Area Structural, Inc., Oakland, California

Building Technology, Incorporated

Representative David B. Hattis, Building Technology, Inc., Silver Spring, Maryland

Eagle Point Software

Representative Ed Graham, Eagle Point Software, Dubuque, Iowa

Alternate Joe Deppe, Eagle Point Software, Dubuque, Iowa

H & H Group, Inc.

Representative Les. L. Hegyi, H&H Group, Inc., McLean, Virginia

LaPay Consulting, Inc.

Representative William S. LaPay, LaPay Consulting, Inc., Export, Pennsylvania

Northroad Builders

Representative Paul O. Johnson, Northroad Builders, Brisbane, California

Alternate Clara A. Johnson, Northroad Builders, Brisbane, California

Southern California Gas Company

Representative Don Dockray, Southern California Gas Company, Los Angeles, California

Square D Company

Representative Philip J. Caldwell, Square D Company, Seneca, South Carolina

Alternate Jeffrey Gatscher, Square D Company, Nashville, Tennessee

Steel Joist Institute

Representative R. Donald Murphy, Steel Joist Institute, Myrtle Beach, South Carolina

Vibration Mountings and Controls

Representative John P. Giuliano, Vibration Mountings and Controls, Bloomingdale, New Jersey

Alternate Rajendra Prasad, Vibration Mountings and Controls, Bloomingdale, New Jersey